TECHNICAL RELEASE

NUMBER 74

LATERAL EARTH PRESSURES

JULY 1989

U.S. DEPARTMENT OF AGRICULTURE

SOIL CONSERVATION SERVICE

ENGINEERING

United States
Department of
Agriculture

Soil
Conservation
Service

P.O. Box 2890
Washington, D.C.
20013

February 9, 1990

TECHNICAL RELEASE NO. 74
210-VI

SUBJECT: ENG - LATERAL EARTH PRESSURES

Purpose. To transmit Technical Release No. 74, Lateral Earth Pressures.

Effective Date. Effective when received.

Explanation. Most structural measures designed for soil and water conservation practices use earth as a foundation under and backfill around the structures. The earth fill surrounding a structure applies a pressure or lateral load. Proper design requires a careful analysis of these pressures or loads so that structural members will be designed to have sufficient strength against sliding, overturning, or structural distress.

This technical release gives the basic concepts for correctly analyzing lateral earth pressures. It provides a table of minimum requirements and several charts or figures that help in solving complex equations. Example design situations and solutions are presented. The technical release is to be used as a guide while applying sound engineering judgment, particularly where there is no soil testing information.

The material presented in this technical release has been collected over a period of many years. Several draft copies have been distributed in training sessions and workshops over the years. Many corrections and revisions have occurred as a result of its use during this period of time. Previously distributed copies should be discarded and replaced by this technical release.

Filing Instructions. File with other technical releases.

Distribution. The distribution is shown on the reverse side based on the number of copies requested by the receiving offices. Obtain additional copies by ordering TR 074 from Central Supply.

Edgar H. Nelson

EDGAR H. NELSON
Associate Deputy Chief
for Technology

Enclosure

DIST: See reverse side.

U.S. DEPARTMENT OF AGRICULTURE
Soil Conservation Service

NHQ-ADS-012
9-87

DISTRIBUTION LIST

STATES		NO. COPIES
Alabama	30	
Alaska	5	
Arizona	30	
Arkansas	40	
California	70	
Colorado	35	
Connecticut	10	
Delaware	10	
Florida	20	
Georgia	40	
Hawaii	10	
Idaho	20	
Illinois	40	
Indiana	25	
Iowa	40	
Kansas	45	
Kentucky	25	
Louisiana	30	
Maine	15	
Maryland	15	
Massachusetts	15	
Michigan	20	
Minnesota	30	
Mississippi	40	
Missouri	30	
Montana	35	
Nebraska	30	
Nevada	10	
New Hampshire	10	
New Jersey	15	
New Mexico	40	
New York	33	
North Carolina	30	
North Dakota	20	
Ohio	40	
Oklahoma	50	
Oregon	20	
Pennsylvania	35	
Puerto Rico	5	
Rhode Island	5	
South Carolina	25	
South Dakota	20	
Tennessee	30	
Texas	100	
Utah	15	
Vermont	10	
Virginia	25	
Washington	35	
West Virginia	35	
Wisconsin	20	
Wyoming	20	
NTC's		
Lincoln, Neb.		25
Portland, Ore.		25
Chester, Pa.		25
Ft. Worth, Tex.		30

NATIONAL HEADQUARTERS	NO. COPIES
OFFICE OF THE CHIEF	1
Associate Chief	
Congressional & Public Liaison Staff	
Strategic Planning & Budget Analysis	
Assistant Chief - Midwest	1
Assistant Chief - South	1
Assistant Chief - Northeast	1
Assistant Chief - West	1
ADMINISTRATION	
Deputy Chief	
Associate Deputy Chief	
Administrative Services	
Financial Management	
Human Resources & Equal Opportunity	
Information Resources Management	1
Public Information	
NHQ Administrative Support Staff	
PROGRAMS	
Deputy Chief	
Associate Deputy Chief	
Basin & Area Planning	1
Civil Rights	
Conservation Planning	
Land Treatment Program	
Operations Management	
Project Development & Maintenance	2
TECHNOLOGY	
Deputy Chief	1
Associate Deputy Chief	1
Cartography & Geographic Information Systems	
Ecological Sciences	1
Economics & Social Sciences	1
Engineering	25
International Conservation	1
Resources Inventory	
Soil Survey	1
Others:	
Helen Gilbert - Room 6840-S	2
J.R. Talbot, Natl Soil Eng. rm6234S	25
Engineering Technology Development Staff - Cotton Annex 1st Mezzanine	25
Central Supply	720
Total Printing	2300

SIGNATURE *(Official requesting distribution)* James R. Talbot

DATE 11/21/89

PREFACE

This technical release is intended to develop an understanding of the physical concepts of lateral earth pressure theory and to present recommended criteria, procedures, and examples for determining lateral earth pressures for the design of SCS structures.

A preliminary paper on this subject was presented at the Western States Design Engineers Workshop, September 1974, by Greg Cunningham, WTSC Engineering Staff, Design Section, Portland, OR. That paper incorporated basic concepts with some of the preliminary criteria and design aids developed by Messers. Harry Firman, Jim Talbot and Dave Ralston, also of the WNTSC Engineering Staff, Design Section, Portland, OR.

The need to continue the study and for the development of national guidelines was subsequently identified and concurred in at the National Design Engineers Conference, Oct. 6-10, 1975, at Portland, OR. It was the consensus of the conference to assign this responsibility to Greg Cunningham of the WNTSC Engineering Staff, Portland, OR.

The outline for this technical release was reviewed and approved by the Engineering Division in March 1977. The first draft, dated October 1979, was circulated through the Engineering Division, the NTC staffs and selected states for formal review and comment. Additional editorial comments have also been received from many users of the draft throughout the country over the past several years. This technical release includes the input from these several sources.

TECHNICAL RELEASE

NUMBER 74

LATERAL EARTH PRESSURES

CONTENTS

Page

NOMENCLATURE i

I. INTRODUCTION 1

II. EARTH AND WATER PRESSURES. 4

A. Vertical Earth Pressures 4

1. Total vertical pressures 4

2. Effective vertical pressures 6

B. Lateral Earth Pressures. 8

C. Water Pressures. 10

1. Hydrostatic pressure 10

2. Excess pore pressure 11

3. Seepage pressure 11

D. Equivalent Fluid Pressures 14

III. SURCHARGE LOADS. 18

A. Static Loads 18

1. Uniform loads. 18

2. Sloping earthfill loads. 23

3. Line and point loads 25

Page

B. Dynamic Loads 26

1. Seismic loads 26

2. Construction and traffic loads 28

IV. SOIL STRENGTH AND STATES OF STRESS IN A SOIL MASS DURING WALL MOVEMENT 30

A. Principal Stresses and Shear Stresses 30

B. Stress/Strain Relationships 31

C. Mohr Circle Theory and Shear Strength Envelopes 33

D. Retaining Wall Movement and Related States of Stress . . . 36

1. Nonyielding walls - "at rest condition", K_o 36

2. Walls yielding away from fill - "active condition", K_a 38

3. Walls yielding toward fill - "passive condition", K_p . 41

4. Wall movement effect on pressure diagram 45

5. Anchor movement and related states of stress 47

V. EARTH MATERIALS AND RELATED EARTH PRESSURES 51

A. Type of Backfill Materials 51

B. Amount and Direction of Wall Movements 53

C. Hydrostatic Loads 56

D. Surcharge Loads 56

E. Heel Length Estimates for Retaining Walls 58

F. Friction Between Soil and Concrete 58

G. Typical Earth Pressure Diagrams 69

VI. GEOMETRIC AND DRAINAGE CONSIDERATIONS 70

VII. INSITU MATERIALS 74

VIII. EFFECTS OF FROST AND ICE LENSES 76

Page

IX. STRUCTURAL STABILITY CONCEPTS. 79

A. Overturning. 79

B. Sliding. 82

C. Bearing Capacity and Settlement. 83

D. Mass Movements 85

E. Anchors and Anchor Blocks. 88

X. DESIGN PROCEDURES, USE OF DESIGN AIDS, AND EXAMPLE PROBLEMS. . 90

A. Clean, Coarse Sand and Gravel Backfill 90

(Less than 5 % fines and $\bar{\phi} > 27^{o}$)

1. Wall yielding away from fill (t/H < 0.085) 90

2. Nonyielding wall (t/H > 0.085, or otherwise restrained). 94

3. Wall yielding toward fill. 96

4. Anchors and anchor blocks. 98

B. Other Mineral Soils (more than 5% fines or $\bar{\phi} < 27^{o}$) 100

1. Wall yielding away from fill (t/H < 0.085) 100

2. Nonyielding wall (t/H > 0.085 or otherwise restrained). 101

3. Wall yielding toward fill. 103

C. Organic Soils ($\frac{\text{LL ovendry}}{\text{LL airdry}} < 0.7$) and High Shrink Swell Soils (LL > 50). 104

D. Effects of Saturation. 104

1. Hydrostatic pressures. 104

2. Seepage pressures. 108

3. Excess pore pressures. 112

Page

E. Effects of Surcharge Loads 116

1. Uniform loads. 116

2. Sloping earthfill loads. 119

3. Line loads 123

4. Point loads. 125

XI. BIBLIOGRAPHY 129

NOMENCLATURE

Ap	Force in anchor rod or tie, pounds
C	Unit cohesion, pounds/feet^2
$\bar{C}$	Effective unit cohesion, pounds/feet^2
d	Vertical distance from concentrated load to point of inspection, feet
EFP	Equivalent Fluid Pressure, pounds/feet^2
EFP_H	Horizontal component of Equivalent Fluid Pressure, pounds/feet^2
EFP_V	Vertical component of Equivalent Fluid Pressure, pounds/feet^2
F	Load Factor, dimensionless
F_s	Factor of safety against sliding, dimensionless
F_h	Factor of safety against uplift or overturning, dimensionless
H	Height of backfill, feet
H_1	Height of sloping backfill surcharge above or below the top of a wall, feet
H_A	Height of anchor or thrust block, feet
H_s	Height of backfill for stability analysis, feet
h	Height of water in backfill, feet
Δh	Head differential or potential head drop, feet
h_s	Height of isolated soil element, inches
i	Hydraulic gradient, dimensionless
J	Seepage force, pounds
J_v	Vertical component of seepage force, pounds
K	Lateral earth pressure coefficient, dimensionless
K_a	Active lateral earth pressure coefficient, dimensionless
K_o	At-rest lateral earth pressure coefficient, dimensionless
K_p	Passive lateral earth pressure coefficient, dimensionless
L	Length and width of a flow net element, feet

L_i Length over which a hydraulic gradient is assumed to act. Measured parallel to flow lines, feet

M_A Moment in wall due to point or line load, pounds/feet^2

ℓ Base length of heel, feet

P Resultant force of soil pressure, pounds

P_a Resultant force of active pressure, pounds

P_o Resultant force of at-rest pressure, pounds

P_p Resultant force of passive pressure, pounds

P_s Resultant force of soil pressure for stability analysis, pounds

P_{hs} Resultant force, horizontal, of soil pressure for stability analysis, pounds

P_{vs} Resultant force, vertical, of soil pressure for stability analysis, pounds

p_{bf} Pressure due to new backfill load, pounds/feet^2

p_h Pressure at heel of footing, pounds/feet^2

p_s Seepage pressure, pounds/feet^2

p_{sv} Vertical component of seepage pressure, pounds/feet^2

p_t Pressure at toe of footing, pounds/feet^2

P_{vL} Vertical pressure on heel due to line surcharge loads, pounds/feet^2

q Unit bearing pressure, pounds/feet^2

q_a Allowable unit bearing pressure, pounds/feet^2

q_1 Footing pressure at toe of footing, pounds/feet^2

q_2 Footing pressure at heel of footing, pounds/feet^2

q_3 Foundation pressure under backfill, pounds/feet^2

q_t Net footing pressure at toe of footing, pounds/feet^2

q_h Net footing pressure at heel of footing, pounds/feet^2

R	Soil resultant force, pounds
r	Radial distance to concentrated load from point of inspection, feet
S	Horizontal distance from concentrated load to point of inspection, parallel to wall, feet
T	Thrust force (change in momentum force) in a pipe bend, pounds
t	Thickness of wall, feet
t_f	Thickness of footing, feet
U	Excess pore water pressure, pounds/feet^2
U_o	Hydrostatic water pressure, pounds/feet^2
V_A	Shear in wall due to point or line load, pounds
W_w	Weight of wall, pounds
W_f	Weight of footing, pounds
W_{bf}	Weight of backfill, pounds
w	Moisture content of soil, percent of dry weight
x	Horizontal distance to concentrated load or force from point of inspection, measured perpendicular to wall, feet
y	Vertical distance of resultant force P, above the base of the wall, feet
z	Horizontal projection of a 1 ft. vertical increase on a sideslope, feet
α	Angle of inclination of shear plane from the horizontal in a soil element, degrees
β	Angle from the horizontal in a seepage force analysis, degrees
γ_{sub}	Buoyant unit weight of soil, pounds/feet^3
γ_m	Moist unit weight of soil, pounds/feet^3
γ_{sat}	Saturated unit weight of soil, pounds/feet^3
γ_w	Unit weight of water, 62.4 pounds/feet3

ΔP_L	Surcharge line load, pounds/lineal feet
ΔP_p	Surcharge point load, pounds
ΔP_u	Surcharge uniform load, pounds/feet^2
Δ_q	Rebound pressure on footings, pounds/feet^2
δ	Angle of inclination of sloping backfill above wall, degrees
ε	Strain in soil element, dimensionless
σ_1	Major principal stress, pounds/feet^2
$\sigma_{2,3}$	Intermediate and minor principal stresses, pounds/feet^2
σ	Unit soil pressure, pounds/feet^2
$\bar{\sigma}$	Effective unit soil pressure, pounds/feet^2
σ_h	Total lateral earth pressure, pounds/feet^2
σ_{ha}	Active total lateral earth pressure, pounds/feet^2
σ_{ho}	At-rest total lateral earth pressure, pounds/feet^2
σ_{hp}	Passive total lateral earth pressure, pounds/feet^2
$\bar{\sigma}_h$	Effective lateral earth pressure, pounds/feet^2
$\bar{\sigma}_{ha}$	Active effective lateral earth pressure, pounds/feet^2
$\bar{\sigma}_{hc}$	Effective lateral earth pressure due to point surcharge load, pounds/feet^2
$\bar{\sigma}_{hL}$	Effective lateral earth pressure due to line surcharge load, pounds/feet^2
$\bar{\sigma}_{ho}$	At-rest effective lateral earth pressure, pounds/feet^2
$\bar{\sigma}_{hp}$	Passive effective lateral earth pressure, pounds/feet^2
σ_v	Total vertical earth pressure, pounds/feet^2
$\bar{\sigma}_v$	Effective vertical earth pressure, pounds/feet^2
σ_α	Normal stress on a plane α degrees from the horizontal, pounds/feet^2
τ_f	Shear stress at failure, pounds/feet^2
τ_{max}	Maximum shear stress, $\tau_{max} = 1/2\ (\bar{\sigma}_v - \bar{\sigma}_h)$, pounds/feet^2

τ_{ult} Ultimate shear stress from stress strain curve, pounds/feet^2

τ_α Shear stress on a plane α degrees from the horizontal, pounds/feet^2

ϕ Angle of internal friction of soil, undrained or total strength, degrees

$\bar{\phi}$ Angle of internal friction of soil, drained or effective strength, degrees

ϕ_f Angle of friction between concrete and foundation soil, degrees

χ Horizontal wall deflection, expressed as a percent of the initial horizontal dimension of the involved soil wedge against the wall (active or passive) and taken along a horizontal plane at any point of interest vertically up or down a wall

I. INTRODUCTION

Anchored bulkheads, retaining walls, and other structures that resist earth movement, have been in use since pre-Roman times. The first rigorous analysis of the problem of lateral earth pressures was published by Coulomb in 1776.[1/] Coloumb's theories were subsequently studied and supported by Rankine in 1857.[2/] These theories and the field of soil mechanics in general were dramatically advanced by Karl Terzaghi's publication on consolidation using effective stress concepts in 1925,[3/] and in his later research on lateral earth pressure measurements in 1934.[4/]

In the ensuing time, numerous papers have been written on the subject. Several of the papers have advanced new methods of analysis, yet none have improved or altered the basic concepts originally set forth by Terzaghi. Because of the multitude of publications now available on this subject, there exists, in some areas, considerable confusion on the theories, methods of analysis and basic concepts for retaining walls. Some of the more recent methods of analysis treat the subject with such great detail and theory, that even the basic concepts, assumptions, and laws of nature which must be dealt with, are not recognized or evaluated by the user. In many instances, retaining walls and other structures have failed simply because over-riding basic considerations and assumptions were totally overlooked. These considerations usually become very obvious during an investigation or re-evaluation after a structural failure occurs.

When a clear understanding of the basic concepts prevails, a relatively straight-foward design procedure based on experience and judgment can be used with confidence. It is to this end that this technical release has

been prepared. Nothing new is presented; this technical release is simply a summary review that emphasizes basic concepts along with relatively simple procedures and criteria which are recommended for the design of SCS structures.

This technical release includes:

1. A basic review of earth and water pressures in vertical and horizontal directions and the effects of various types of surcharges (Sections II and III).

2. A review of soil strength concepts, the related stress/strain relationships, and the development of Mohr stress circles up to failure as a wall is physically deflected into, or away from, an earth fill load (Section IV).

3. A review of the types and effects of backfill materials, how they relate to the selection of appropriate lateral earth pressures or pressure coefficients, and recommended procedures for selecting design earth pressure coefficients or Equivalent Fluid Pressures (Section V).

4. A brief discussion of structure stability analysis to highlight common applications and specific areas of stability analysis where difficulties in design frequently occur (Sections VI thru IX).

5. Several example problems on the use of this technical release (Section X).

The user is specifically cautioned of the following before applying this technical release:

1. The included design aids in Section V should not be used directly or hurriedly without first reviewing and understanding the basic concepts, and the assumptions and limitations on which they are based. This is the primary reason for including Sections I-IV and Sections VI-IX in this technical release.

2. Basic assumptions, such as type of structure, type of structural deflection, type and properties of backfill soils, drainage needs and provisions, and the geologic setting of the structure site must be reviewed on a site-by-site basis. These basics are frequently overlooked and are the most common causes of retaining wall failures. If any one, or a combination of these basics are overlooked or improperly evaluated, no amount of testing or refined theoretical analysis will compensate for them in design. Modern reinforced concrete design procedures and codes no longer include safety factors to compensate for erroneous loads or site condition assumptions. They are gradually being reduced and they should no longer be depended on to account for uncertainties in load evaluations. Proper assumptions and realistic evaluations of the actual site conditions are a must.

3. The pressure diagrams in this technical release depicting vertical pressures have arrow heads on horizontal lines (as do those for horizontal pressures). This is done only to relay the concept that it is a pressure diagram; they do not indicate the pressure direction. This user must observe the labeling of each pressure diagram carefully. (σ_v, σ_h, etc.).

II. EARTH AND WATER PRESSURES

A. Vertical Earth Pressures

1. Total Vertical Pressures: Total vertical pressure, σ_v, (on a horizontal plane of unit area) consists of the total weight of the material directly above the plane of unit area. If the material is water, the total vertical pressure, σ_v, is the weight of water above the plane, $\sigma_v = H\gamma_w$. Since hydrostatic pressure, U_o, acts with equal force in all directions, $\sigma_v = \sigma_h = U_o = H\gamma_w$. This is graphically shown in Figure 1.

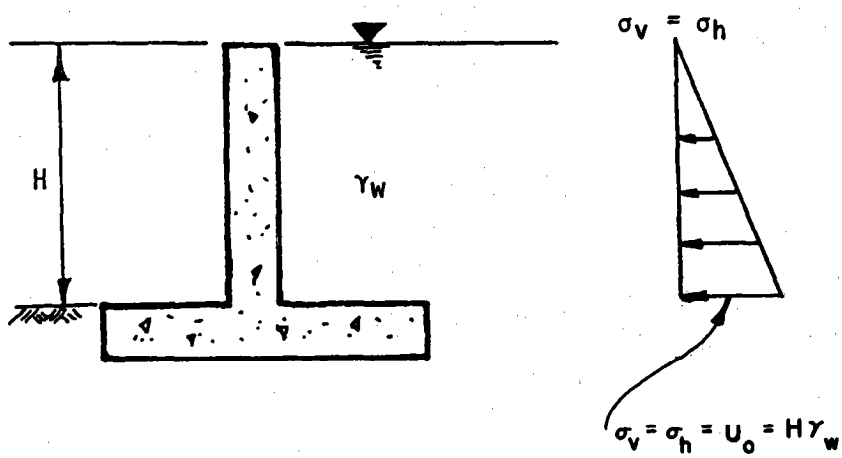

FIGURE 1 - TOTAL HYDROSTATIC PRESSURE

If the material is moist soil, the total vertical pressure, σ_v, is the total weight of moist soil directly above the plane of unit area, $\sigma_v = H\gamma_m$. This is graphically shown in Figure 2.

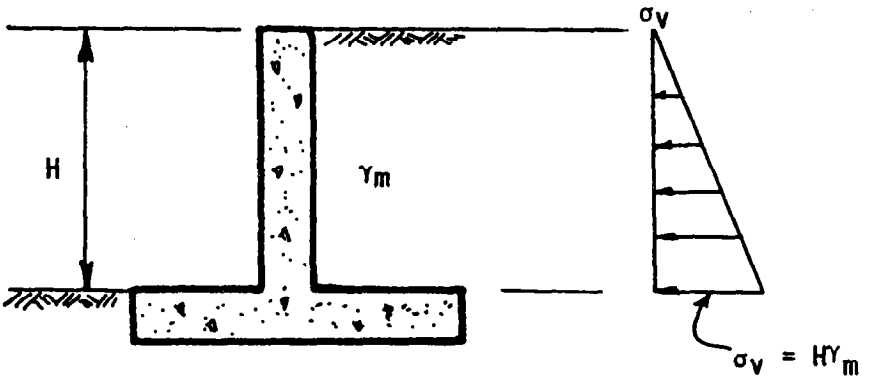

FIGURE 2 - TOTAL VERTICAL PRESSURE, MOIST

If the soil is saturated, the total vertical pressure, σ_v, is the total weight of saturated soil directly above plane of unit area, $\sigma_v = H\gamma_{sat}$. This is graphically shown in Figure 3.

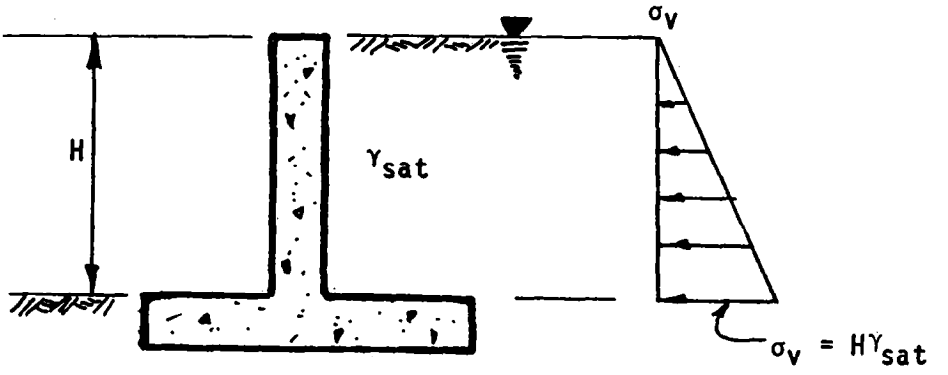

FIGURE 3 - TOTAL VERTICAL PRESSURE, SATURATED

2. <u>Effective Vertical Pressures</u>: A distinction is made for saturated soils in that a part of the total vertical pressure, σ_v, is considered to be an "effective" or integranular (grain-to-grain) pressure, $\bar{\sigma}_v$; the remaining portion of the total pressure is in the form of hydrostatic pressure, U_o, due to the water within the voids of the saturated soil mass or, in other words:

$\sigma_v = H\gamma_{sat} = \sigma_v + U_o$. This is graphically shown in Figure 4.

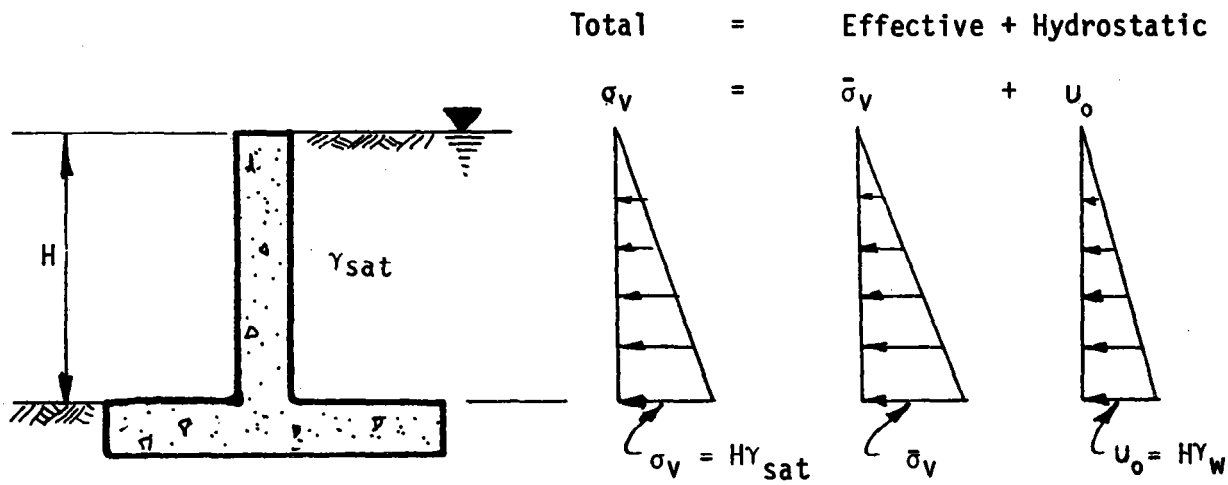

FIGURE 4 - EFFECTIVE VERTICAL PRESSURES

The value of the effective vertical pressure, $\bar{\sigma}_v$, is determined by subtracting the known hydrostatic pore pressure, U_o, from the known total pressure, σ_v. Since $\sigma_v = \bar{\sigma}_v + U_o$ we can rearrange the terms to solve for $\bar{\sigma}_v$;

$$\sigma_v = \bar{\sigma}_v + U_o$$

By rearranging: $\bar{\sigma}_v = \sigma_v - U_o$

By substituting: $\sigma_v = H\gamma_{sat}$ and $U_o = H\gamma_w$:

We get: $\bar{\sigma}_v = (H\gamma_{sat})-(H\gamma_w)$

By factoring H: $\bar{\sigma}_v = H(\gamma_{sat} - \gamma_w)$

By definition: $(\gamma_{sat} - \gamma_w)$ is the buoyant unit weight of soil or γ_{sub}.

By substituting: $\gamma_{sub} = (\gamma_{sat} - \gamma_w)$ we have: $\bar{\sigma}_v = H\gamma_{sub}$.

This equation expresses the basic concept of effective vertical pressure in saturated soil in terms of the buoyant weight of the soil. This is graphically shown in Figure 5.

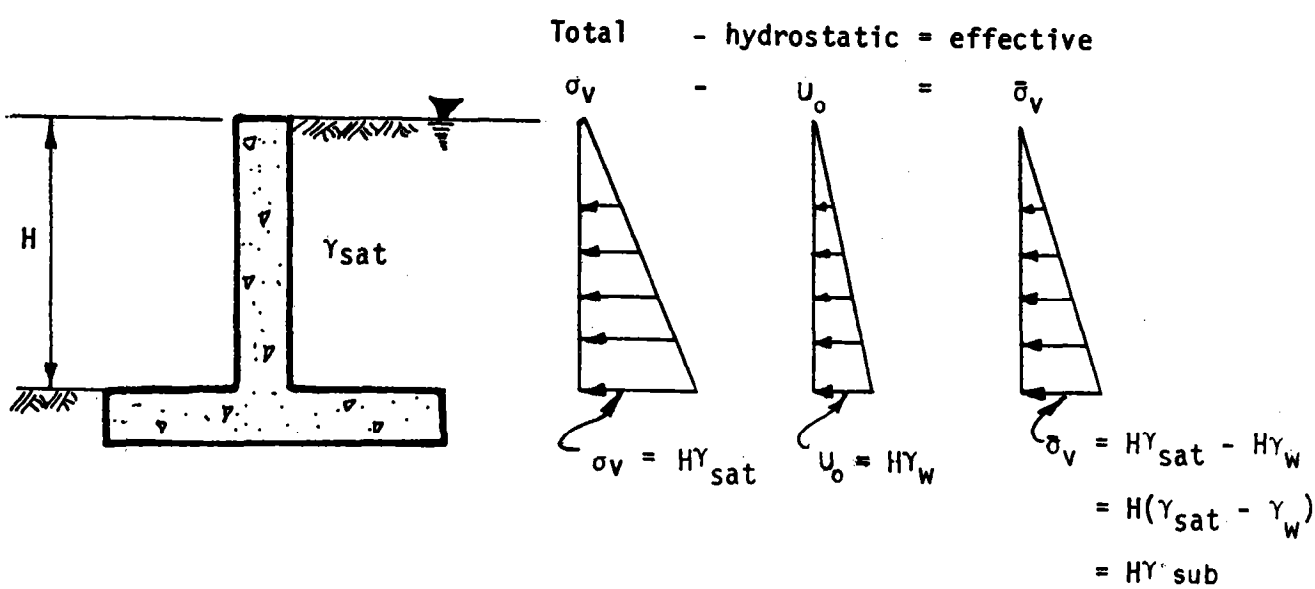

FIGURE 5 - EFFECTIVE VERTICAL PRESSURES

If the soil is not saturated (e.g., moist or dry) the total vertical pressure is equal to the total effective pressure; or, in other words, all of the weight is carried by the soil grains in contact with one another. This is graphically shown in Figure 6.

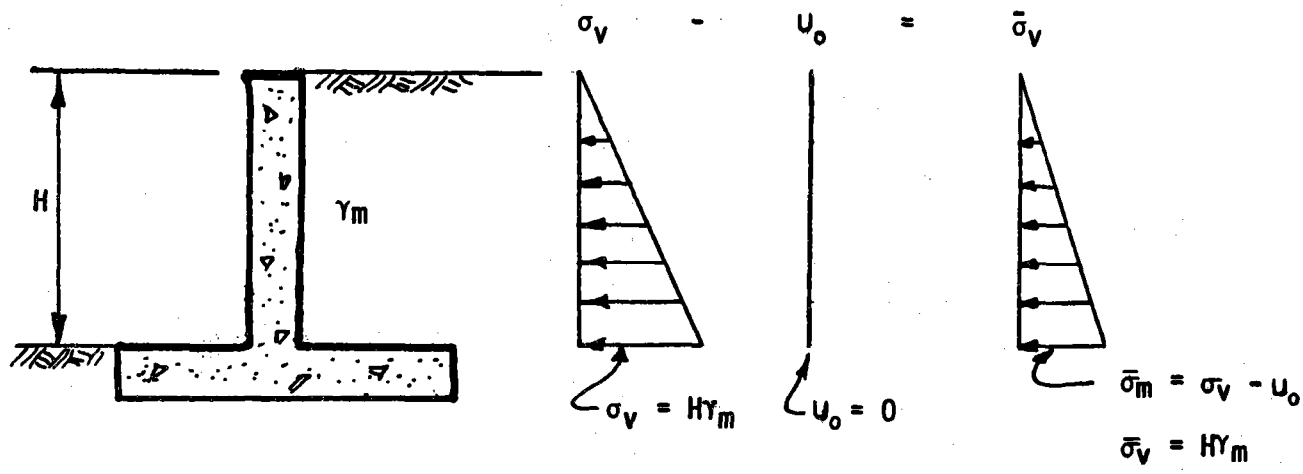

FIGURE 6 - PRESSURES IN MOIST FILL

B. Lateral Earth Pressures

Effective lateral earth pressures, $\bar{\sigma}_h$, are determined by transferring a portion of the effective vertical pressure, $\bar{\sigma}_v$, horizontally. The amount of transfer is dependent on a number of factors; the most important being the type, weight and strength of the soil behind the wall and the direction and amount of wall movement. The amount of transfer is expressed in terms of a lateral earth pressure coefficient, K. K is the ratio of horizontal to vertical effective pressures ($K = \frac{\bar{\sigma}_h}{\bar{\sigma}_v}$), or, one might think of it in terms of a percent, where $\bar{\sigma}_h$ is a percentage, K, of $\bar{\sigma}_v$, ($\bar{\sigma}_h = K\bar{\sigma}_v$).

Lateral earth pressure coefficients can only be applied to effective vertical pressures. They cannot be applied to total pressures (or stresses) of a saturated soil. This is an often misunderstood concept. It is frequently confused with the condition of dry or moist soil where the effective and total vertical pressures are equal, and, in which case, the lateral earth pressure coefficients can be applied directly.

In saturated soils the hydrostatic pore pressure, U_o, is equal in all directions ($K = 1.0$). The lateral hydrostatic pressure is the same as the vertical; it is not changed by the lateral earth pressure coefficient of the soil. This is the primary reason for determining the effective vertical pressure, $\bar{\sigma}_v$. When $\bar{\sigma}_v$ is known, the effective lateral earth pressure, $\bar{\sigma}_h$, can be determined by multiplying $\bar{\sigma}_v$ by the lateral earth pressure coefficient, K, ($\bar{\sigma}_h = K\bar{\sigma}_v$). The hydrostatic pore pressure, U_o, is then added to $\bar{\sigma}_h$ to obtain the total lateral earth pressure, σ_h, ($\sigma_h = \bar{\sigma}_h + U_o$). In equation form:

$$\sigma_h = \bar{\sigma}_h + U_o \text{ where:}$$

$$\bar{\sigma}_h = K\bar{\sigma}_v,\ U_o = H\gamma_w \text{ and } \bar{\sigma}_v = H\gamma_{sub} \text{ or:}$$

$$\sigma_h = KH\ \gamma_{sub} + H\gamma_w$$

σ_h is the total lateral earth pressure which must be used to determine the load on earth retaining structures. This is graphically shown on Figure 7.

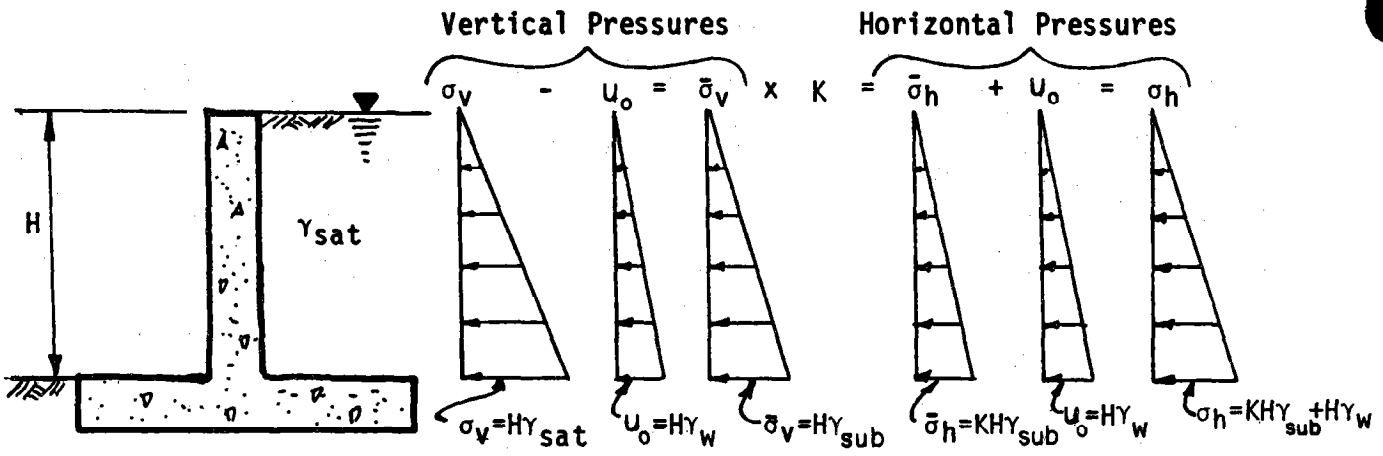

FIGURE 7 - PRESSURES IN SATURATED BACKFILL

C. Water Pressures

1. Hydrostatic Pressure: Hydrostatic pore pressure, U_o, has a significant effect on the total lateral earth pressure. In many cases it may double it when compared to the total lateral earth pressure of moist fill.

All possible sources of water which will develop hydrostatic pressures must be considered. These include natural water tables, surface runoff, rainfall, seepage flow around a hydraulic structure, and so on.

Hydrostatic forces should never be considered negligible unless it can be conclusively shown that there are no possible sources of water, or that sufficient drainage will be provided to relieve all hydrostatic pressures. Drainage systems frequently include filter materials, drain fill materials, perforated drain pipes and weep hole outlets. Drain outlets must be located

so that complete drainage of the backfill is assured and so that the hydraulic functioning of a structure does not unnecessarily saturate the fill. This condition, during long duration flows, could, in some cases, develop unanticipated hydrostatic pressures in the backfill.

2. Excess Pore Pressure: Water pressures which are greater than, or in "excess" of hydrostatic pressures, are termed excess pore pressures, U. They can be developed several ways. They are principally caused by loading a saturated soil at a rate that is so fast, that the permeability of the soil will not allow the extra (or "excess") water pressure to dissipate as rapidly as it is being produced by the weight of the load being applied. In this case, the load is temporarily carried by the excess pore water pressure. This frequently occurs when large surcharge or earthquake loads are rapidly applied to saturated or nearly-saturated fine grained soils. It also occurs during normal consolidation of any fine grained saturated soil. These pressures are discussed in greater detail in Section III.

3. Seepage Pressure: The downward percolation of surface water or drainage of groundwater toward a structure can introduce seepage forces that may also significantly increase wall loadings.[5/,6/,7/,8/]

If the groundwater level and other conditions that affect the seepage flow are known, a flow net can be drawn and an analysis made to determine the seepage forces.

Depending on the location and configuration of the backfill drainage system, the effect of seepage forces, laterally on a structure, can vary from essentially zero to a relatively large amount. Measures which may be taken to control and/or reduce seepage pressures to zero or insignificant values are recommended and discussed in Section VI.

When the above measures cannot be taken, seepage pressures are normally accounted for in one of two approaches:

a. By graphical methods using total soil weights and accounting for the change in hydrostatic pressure (seepage force) along assumed trial failure planes in the backfill. Figure 8 shows the general schematic for this analysis. The designer should refer to "Fundamentals of Soil Mechanics" by Taylor, 8/ or consult a qualified soils engineer for assistance before performing this analysis.

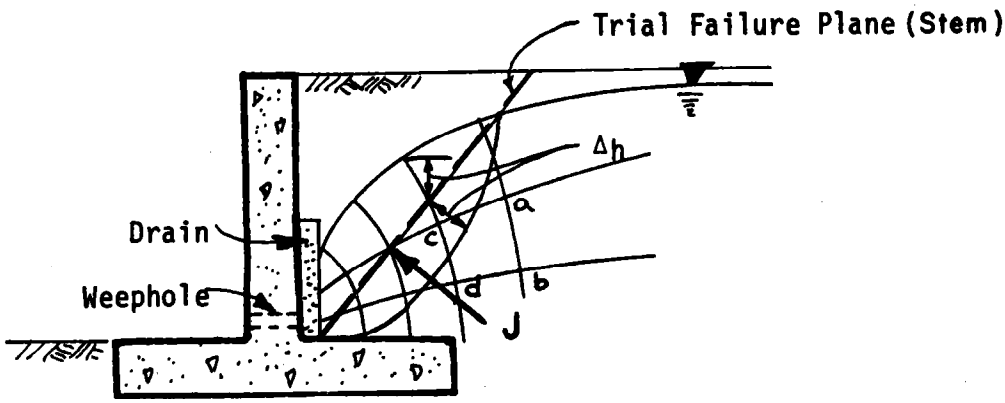

FIGURE 8 - HYDROSTATIC PRESSURE & SEEPAGE FORCE, J,

ON A TRIAL PLANE FOR STEM LOAD

b. By resolving the seepage pressure and adding it to the pre-existing vertical effective pressure, and then transferring the sum of the two into a new effective lateral pressure using the lateral earth pressure coefficient of the soil.

$$\sigma_h = K\bar{\sigma}_v + U_o$$

Where: $\bar{\sigma}_v = H\gamma_{sub} + J_v$

and: $\bar{\sigma}_h = K(H\gamma_{sub} + J_v)$

$$\sigma_h = K(H\gamma_{sub} + J_v) + U_o$$

When seepage pressures are accounted for in this manner, the following concept of seepage pressure evaluation must be understood:

Consider the flow net element "abcd" of Figure 8, bounded by the equipotential lines "ab" and "cd" and the flow lines "ac" and "bd," (enlarged in Figure 9). The equipotential line "ab" has a head, Δh greater than that at "cd," and the direction of flow is from "ab" to "cd."

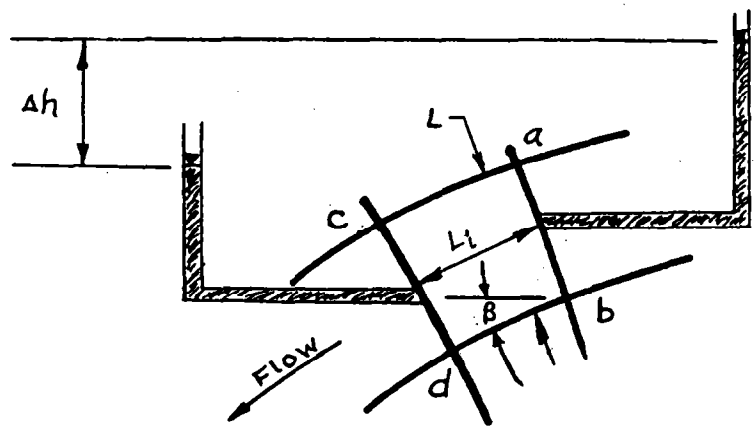

FIGURE 9 - FLOW NET ELEMENT

The seepage force exerted on the soil grains in the direction of flow is $J = \Delta h \gamma_w$ Li (Li being the distance shown). The hydraulic gradient, i, is $i = \frac{\Delta h}{L_i}$. The seepage pressure on cd is $Ps = \frac{\Delta h}{L_i} \gamma_w = i\gamma_w$, and its vertical component is $Psv = i\gamma_w \sin\beta$. Note that the seepage pressure is in terms of force per unit volume; it must be multiplied by the length, L_i, over which the gradient, i, acts, in order to obtain the seepage pressure in terms of force per unit area. This length, L_i, is measured parallel to the flow lines.

The vertical seepage pressure, Psv, can be added to the effective vertical pressure to obtain the new effective vertical pressure.

In equation form:

$$\bar{\sigma}_v = H\gamma_{sub} + i\gamma_w L_i \sin\beta$$

$$\bar{\sigma}_h = K(H\gamma_{sub} + i\gamma_w L_i \sin\beta)$$

$$\sigma_h = K(H\gamma_{sub} + i\gamma_w L_i \sin\beta) + H_w\gamma_w$$

In either approach, the user should consult with an accepted reference such as "Seepage, Drainage and Flow Nets" by Cedergren [23] or consult a qualified soils engineer for assistance before performing this analysis. This section is presented for conceptual awareness only so that it is not overlooked; it is not intended as an in-depth treatment.

D. Equivalent Fluid Pressures:

The term "equivalent fluid pressure," is often used in two, totally different contexts, which frequently causes confusion. These are: (1) where a uniformly changing pressure diagram (triangular) is assumed to be approximately correct, representative of, and a function of, a given type of soil[5]; and (2) where a mathematical procedure is used to simply replace a

more complex pressure diagram with a triangular one (equivalent fluid pressure). In the latter context, the moment at the base of a wall is determined from the actual pressure diagram and then used to determine the triangular diagram (equivalent pressure) that would create the same moment.

The advantage of using equivalent fluid pressures in the first context is that one can quickly and very simply obtain the approximate lateral earth pressures if a reasonably good description of the soils is available. The disadvantages are: (1) it is limited to walls that can yield sufficiently to develop active pressures, (2) only sloping surcharges can be accounted for, (3) the backfill must be reasonably uniform with depth and (4) the effects of backfill zoning, water pressures and deflection cannot be accounted for. These equivalent fluid pressures should be used only when the above factors have been fully considered. They should not be used carelessly or in leiu of the actual pressure diagrams (using lateral earth pressure coefficients) for walls that are greater than about 8 or 10 feet in height.

The advantage of using a mathematically equivalent fluid pressure in the second context is that during structural design the theoretical cutoff points for reinforcing steel can be located more simply with an "equivalent" triangular pressure diagram. The primary disadvantage is that for larger structures, greater than 10 or 12 feet in height, the effects of backfill zones, water pressures, and deflections can become very significant. For example, a partially saturated zoned backfill may give a similar <u>total</u> pressure and maximum moment as that obtained by such a equivalent fluid pressure diagram, but the <u>actual</u> location of its resultant force may be

considerably higher or lower on the wall than is indicated by the triangular (equivalent fluid pressure) diagram. This could result in excessive moments in portions of the wall.

Figure 10 shows the sketch and procedural steps in the solution for a mathematically equivalent fluid pressure diagram in the second context for a 12-foot-high wall with a partially saturated homogenous backfill, K_a = 0.5. It can be seen that the differences between the pressure diagrams and the location of the reactions (3.65 ft. vs. 4.0 ft.) are quite small and that either method is probably adequate in this particular case. For a zoned backfill, or one with surcharges, the situation can be considerably different and significantly in error, however. Designers need to be cognizant of this.

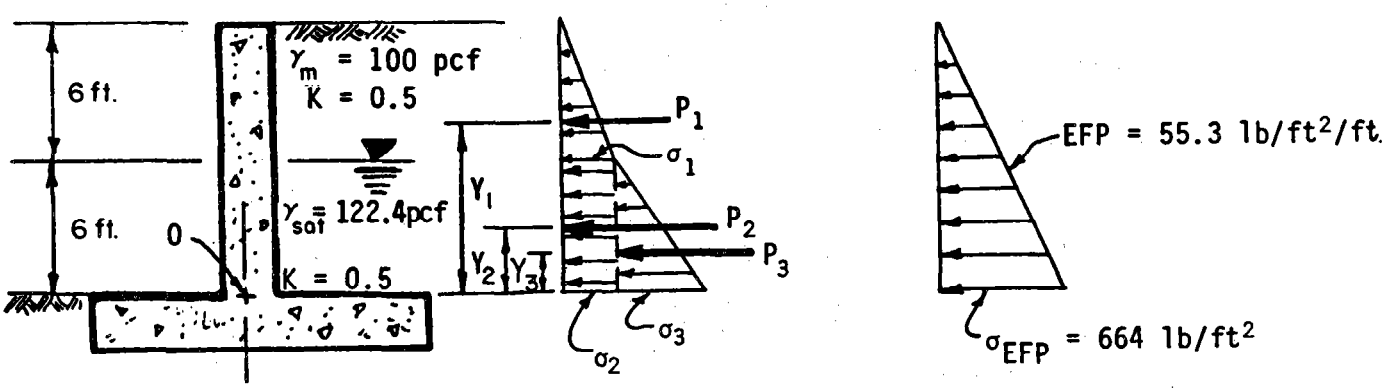

FIGURE 10 - EXAMPLE OF DETERMINING EFP

Calculation of actual pressures and forces:

$$\sigma_1 = (0.5)(100)(6) = 300 \text{ lb/ft}^2$$

$$\sigma_2 = 300 \text{ lb/ft}^2$$

$$\sigma_3 = (0.5)(122.4 - 62.4)(6) + (62.4)(6) = 554 \text{ lb/ft}^2$$

$$P_1 = 1/2(300)(6) = 900 \text{ lb}$$

$$P_2 = (300)(6) = 1800 \text{ lb}$$

$$P_3 = 1/2(554)(6) = 1662 \text{ lb}$$

Calculation of Moment at base of wall from actual forces:

$$\Sigma M_o = P_1Y_1 + P_2Y_2 + P_3Y_3 = (900)(8) + (1800)(3) + (1662)(2)$$

$$\Sigma M_o = 15{,}924 \text{ ft/lbs}$$

Calculation of Moment at base of wall from EFP diagram:

$$\Sigma M_o \text{ (for EFP)} = \frac{(EFP)(H)^3}{6} = \frac{(EFP)(12)^3}{6} = 288(EFP)$$

Set Moments Equal:

$$15{,}924 = 288 \text{ (EFP)}$$

$$\therefore \text{ EFP} = \frac{15{,}924}{288} = 55.3 \text{ lb/ft}^2\text{/ft}$$

$$\text{Max EFP} = (12)(55.3) = 664 \text{ lb/ft}^2$$

III. SURCHARGE LOADS

A. Static Loads

1. Uniform Loads: Surcharge loads can add significantly to both the vertical and lateral earth pressures and must be considered in design. Normally, in well-drained backfill materials, surcharges are carried by the intergranular structure of the soil. For this case, both the total stresses and effective stresses are equally increased by the surcharge with little effect on the hydrostatic pressure as shown in Figure 11.

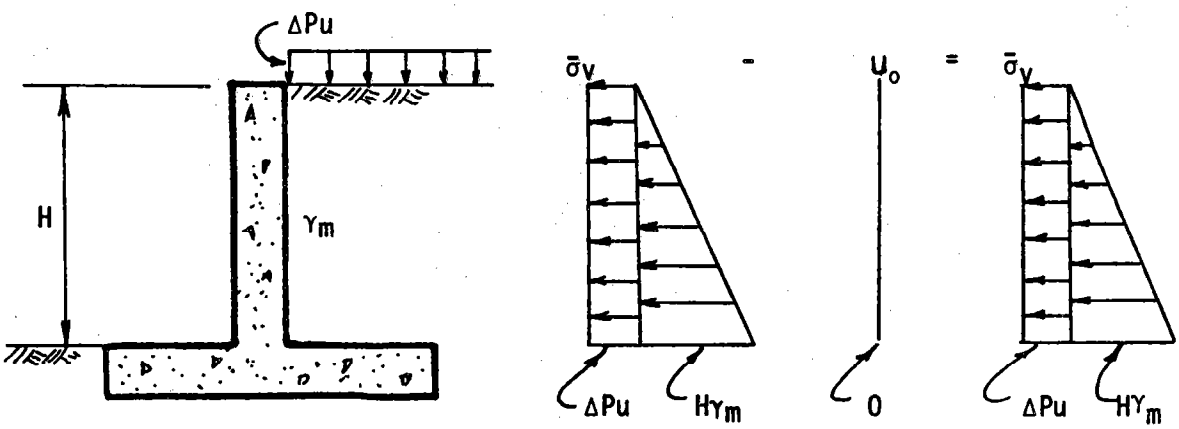

FIGURE 11 - SURCHARGE IN MOIST OR DRY SOILS

The situation can be quite different, however, when rapidly applied surcharges are added to saturated soil materials that are not free-draining[9/]. In this case, the surcharge is at first carried by the pore water pressure (frequently termed excess pore pressure, U), which is in addition to the hydrostatic pressure, U_o. Since the water in a saturated soil trans-

fers its pressure equally in all directions, (K = 1.0), the initial effect is that all of the surcharge load, ΔP_U, is exerted laterally to the wall in addition to the already existing total lateral earth pressure, σ_h. Figure 12 shows these pressure diagram components for rapidly applied surcharge. Note that the total pressure, σ_h, differs from that in Figure 7 (no surcharge) by the amount ΔP_U.

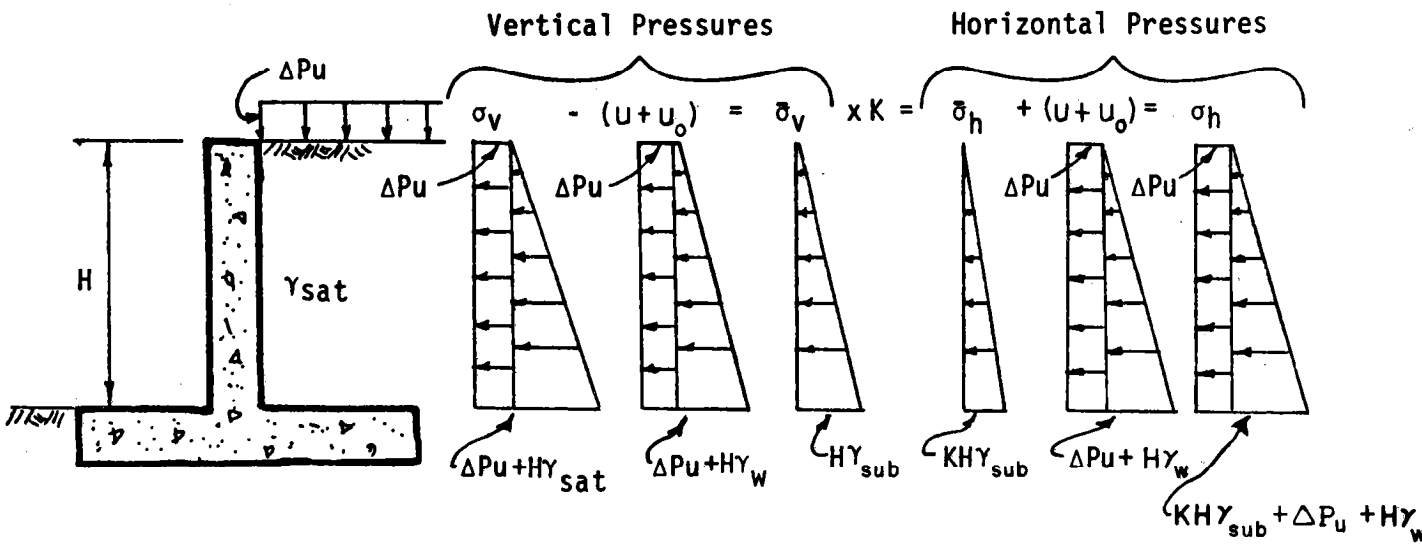

FIGURE 12 - EFFECTS OF SURCHARGE BEFORE RELIEF OF EXCESS PORE PRESSURE

Eventually, the excess pore pressure, U, dissipates through the soil or drain system and returns to zero leaving only the original hydrostatic pore pressure, U_o, that existed before the surcharge was applied. As this dissipation occurs, the surcharge is gradually transferred from the pore water to the soil structure (intergranular or effective vertical pressure). When this transfer is completed, the surcharge is then carried entirely by the soil structure, increasing the effective vertical stress by the amount ΔP_U.

This increased effective vertical stress, $\bar{\sigma}_v + \Delta P_U$, can then be multiplied by the lateral earth pressure coefficient, K, and added to the hydrostatic pressure, U_o, to obtain the total lateral earth pressure, σ_h.

$$\sigma_h = K(\bar{\sigma}_v + \Delta P_U) + U_o$$

This is a lesser earth pressure than immediately after the surcharge load is applied which could be as high as:

$$\sigma_h = K\bar{\sigma}_v + \Delta P_U + U_o \qquad (\Delta P_U \text{ at a max} = U)$$

This is diagramatically shown in Figure 13. The difference can be seen by comparing Figure 13 to Figure 12. In comparing these figures, it can be seen that after the excess pore pressure, U, is relieved, the total lateral earth pressure, σ_h, is increased by $K\Delta P_U$ rather the full value of ΔP_u.

The significance of this concept is that it explains how stationary or repeated surcharge loads on a saturated fine-grained fill may eventually jack a wall out of place, or break it, even though it is thought to be adequately designed for surcharge loads.

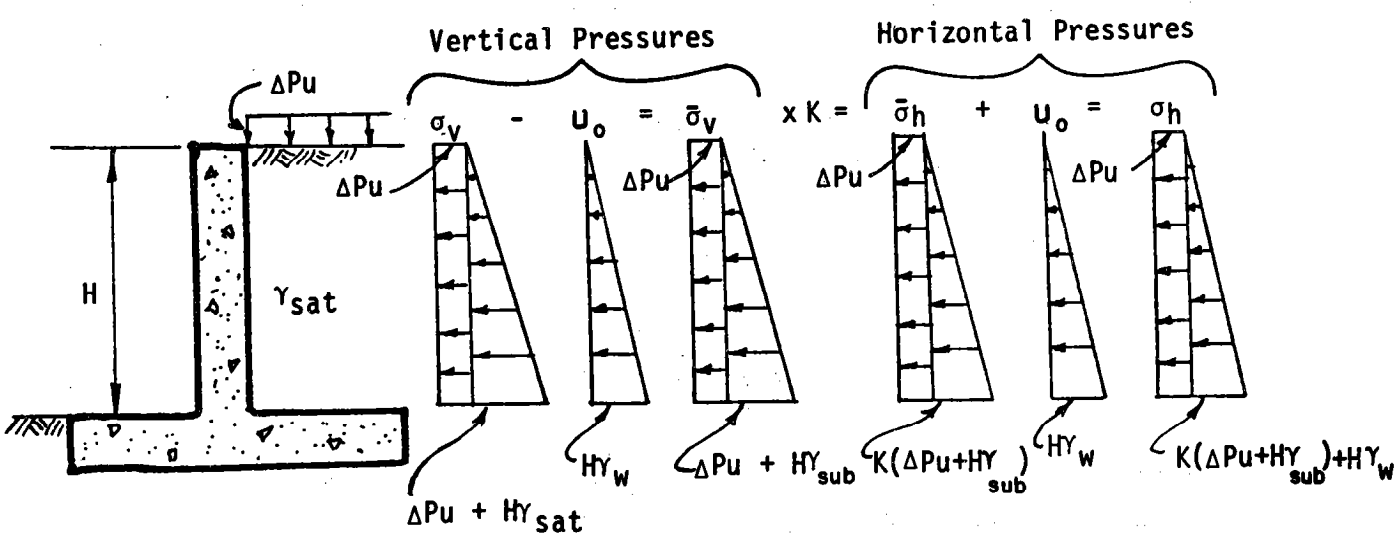

FIGURE 13 - EFFECTS OF SURCHARGE AFTER RELIEF OF EXCESS PORE PRESSURE

As shown in Figure 14, most uniform surcharge loads on relatively low walls are assumed to be distributed uniformly with depth. This vertical surcharge stress is transferred laterally in the same ratio, $K = \frac{\sigma_h}{\sigma_v}$, as are the stresses in the soil mass itself. This is shown in Figure 15. This is, of course, for slowly applied surcharges or freely draining backfill, where the surcharge is not carried by excess pore pressures.

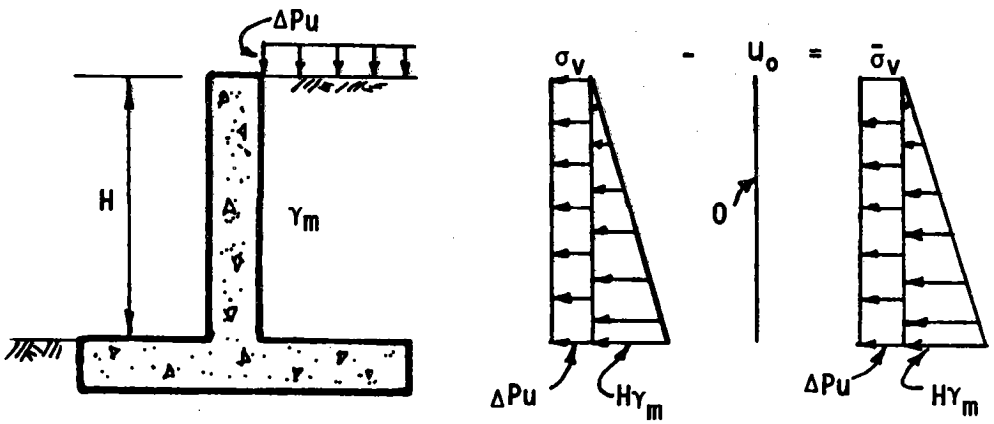

FIGURE 14 - EFFECT OF SURCHARGE ON VERTICAL STRESS

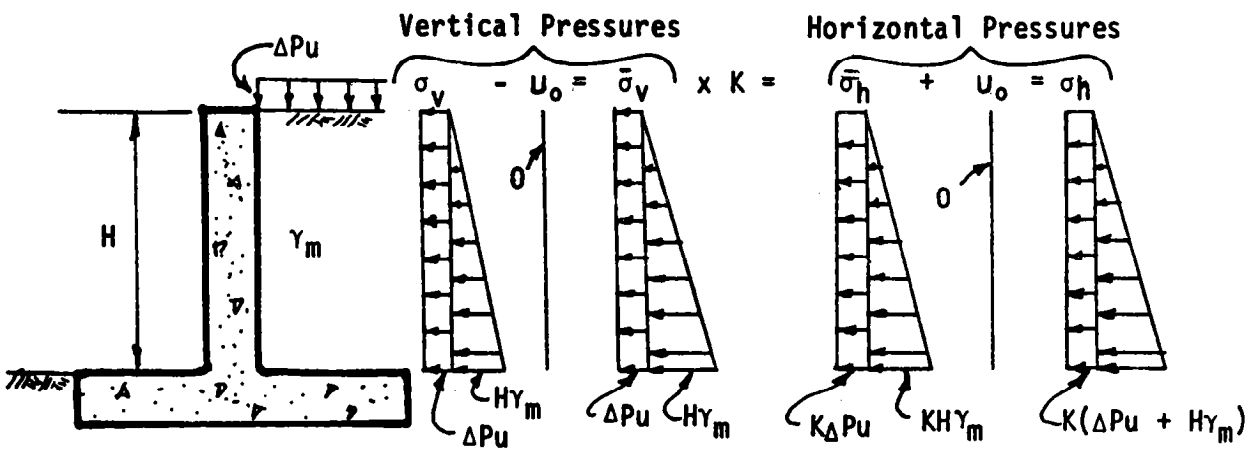

FIGURE 15 - SURCHARGE TRANSFER TO HORIZONTAL STRESS

The effective vertical pressure, including surcharge, also acts as a downward force on the heel of the structure and should be considered when evaluating structural stability and settlement.

It is common practice to assume a minimum uniform surcharge load of 2 feet of soil on a level backfill unless there are clear restrictions which make this assumption invalid or larger surcharges are anticipated. Many SCS engineers include this to account for surcharge loads that commonly occur during operations, maintenance, etc., along most of our structures.

Uniform surcharge loads on sloping backfills can be handled in the same manner as indicated for level backfills. The effects of sloping backfill surcharges are discussed separately in Sections III and V.

It is also common practice to disregard the effects of surcharge loads if the load is far enough away from the top of the wall so that a line projected downward at approximately 40° from the horizontal does not strike the wall.[5/] This is graphically shown in Figure 16.

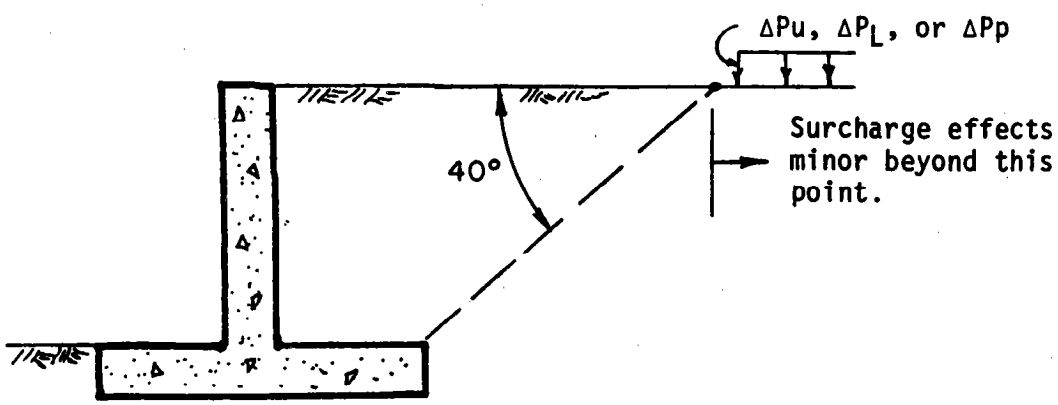

FIGURE 16 - SURCHARGE BEYOND ZONE OF INFLUENCE

2. Sloping Earthfill Loads: Sloping earthfill loads are probably one of the more common types of surcharges encountered. A usual practice is to: (1) increase the lateral earth pressure coefficient as appropriate for the geometry of the fill slope and the type of backfill material for non-yielding walls, or, (2) to use appropriate equivalent fluid pressures where yielding walls are involved. When increased lateral earth pressure coefficients are used for non-yielding walls, a factor, F, is used to account for the increase. When equivalent fluid pressures are used for yielding walls, higher equivalent fluid pressure values are obtained from the charts which include the effects of the sloping surcharge. These values are dependent on the geometry of the backfill slope and the materials involved. In both methods of analysis, a triangular earth pressure diagram is assumed, as shown in Figure 17 (Figure 17 is for stem design only). Design procedures and charts for both of these methods are included in Section V.

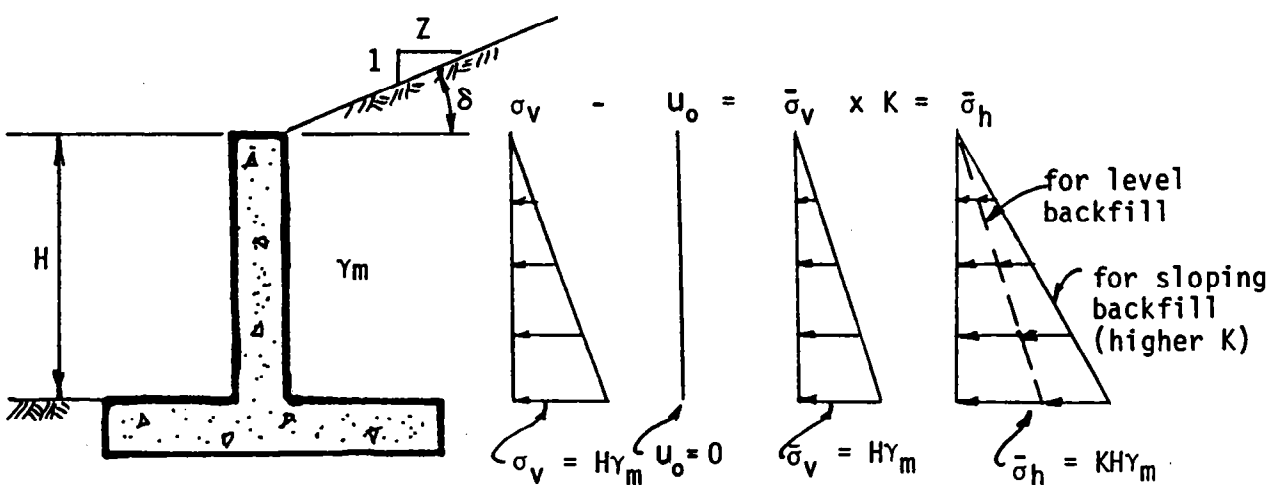

FIGURE 17 - EFFECT OF SLOPING SURCHARGE ON PRESSURE DIAGRAM

(STEM DESIGN)

For stability analysis with a sloping surcharge load, one should also evaluate the external forces on a vertical plane at the heel and their directions as closely as possible. Figure 18 shows the appropriate geometry to be used when evaluating stability of a wall with a sloping surcharge load with either method of analysis (coefficients or EFP). Note that the parameters P and H are subscripted as P_s and H_s to indicate they are values to be used for stability analyses only.

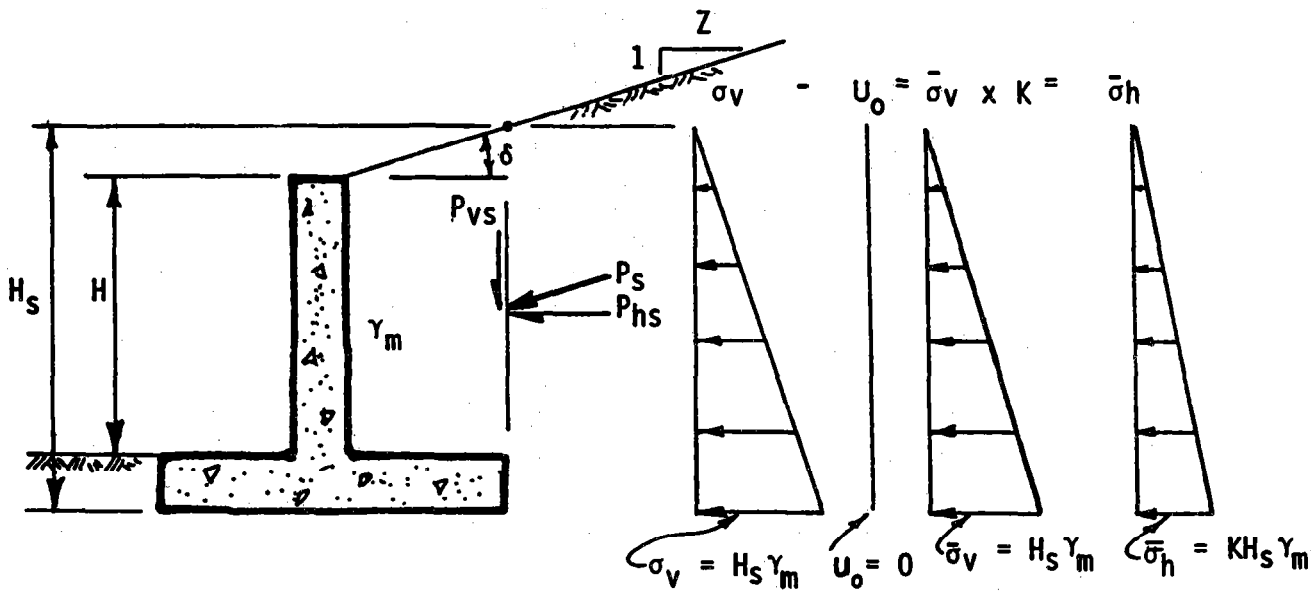

FIGURE 18 - EFFECT OF SLOPING SURCHARGE ON PRESSURE DIAGRAM (STABILITY DESIGN)

P_{vs} is the vertical component of the soil load resultant, P_s, which is assumed to act at a slope parallel to the surcharge slope. P_{hs} is the horizontal component of P_s and is equal to the area of the effective horizontal pressure diagram, or:

$$P_{hs} = 1/2(\bar{\sigma}_h)H_s$$

$$\therefore \quad P_{hs} = 1/2\ K\gamma_m\ H^2{}_s$$

and: $$P_{vs} = P_{hs}\tan\delta = 1/2(\bar{\sigma}_h)H_s(\tan\delta)$$

$$\therefore \quad P_{vs} = 1/2\ K\gamma_m\ H^2{}_s$$

where: $\tan\delta = 1/z$

When equivalent fluid pressures are used, the respective values become:

$$P_{hs} = P_a = 1/2\ (EFP_h)\ H^2{}_s$$

and:

$$P_{vs} = 1/2\ (EFP_v)\ H^2{}_s$$

EFP_h and EFP_v are the horizontal and vertical equivalent fluid pressure values indicated in Figure 46 of Section V.

The user is cautioned that the vertical force component should not wholely be relied on for stability analysis. It is recommended that minimum stability saftey factors of about 1.2 or 1.3 be maintained without assuming the resistance of the vertical force at the heel.

3. Line and Point Loads: Line or point surcharge loads can contribute significantly to the lateral earth pressure against a wall. Not only do they add numerically to the lateral earth pressure values caused by backfill pressures, they can also significantly change the earth pressure diagram and the location of the resultant forces. The resultant forces are higher up on the wall and consequently may significantly increase the shear and bending moments in the wall.

The significance of line or point surcharge loads depends on the size of the load, the type of backfill, the distance between the load and the top of the wall, x, the depth of inspection below the top of the wall, d, and, in the case of a point load, the distance away in a direction parallel to the wall, s.[10/] This is diagrammatically shown in Figure 19. Specific recommendations and procedures for these types of loads are included in Section V.

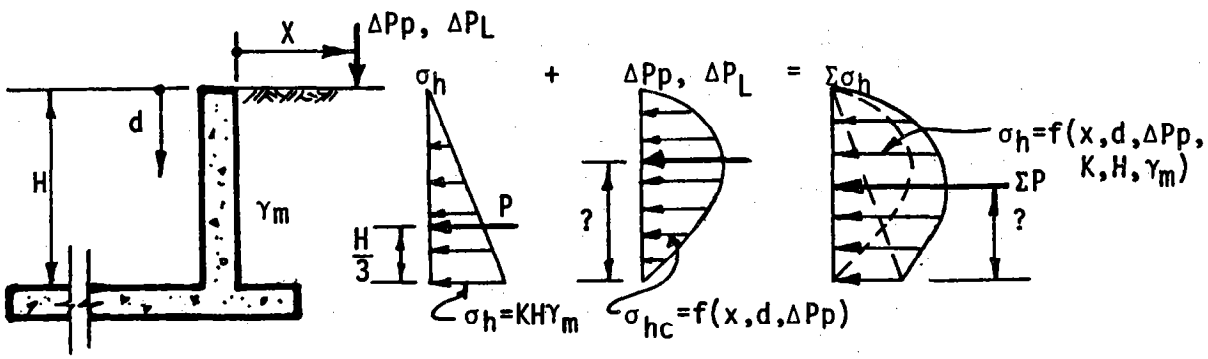

FIGURE 19 - EFFECT OF POINT OR LINE LOADS ON PRESSURE DIAGRAM

B. Dynamic Loads

1. Seismic Loads: Normally, seismic loading is not a serious consideration for SCS hydraulic structures unless they are relatively tall or cannot tolerate minor movements or deflections.

At the present state of the art, the effect of seismic earth loads on structures cannot be readily or directly determined for routine design procedures. Consequently it is a common practice to replace the seismic load with a static surcharge load that is roughly equivalent. Considerable experience and judgment are needed for this estimate.

Another common approach is to add a pseudo-static horizontal force equal to the weight of the soil mass above an assumed failure plane times an empirical seismic coefficient[11/]. The coefficients that are used in stability analysis for earth dams in TR-60 may be appropriate for this approach.

Walls with saturated backfills are more susceptible to overstressing during seismic loading than are those with moist or dry backfills and should be given more serious attention in active seismic areas. There have been very few instances, however, of structural overstressing by seismic loads where the backfill has been dry and well compacted.

In addition to the above, a few other important seismic considerations need to be made. These are:

a. Seismic loading normally increases the unit weight of most backfills, particularly noncohesive soils when they are initially placed or are naturally at dry densities less than about 70 percent relative density. Where this potential exists, the design of the structure should also be for loads resulting from backfill in a denser state that could be achieved by seismic loading.

b. Seismic loading can bring about a rapid bearing capacity failure of the supporting soil. Certain clays and silts may be sensitive to shocks and liquify leading to a rapid loss of strength (e.g., when natural moisture contents are greater than the Liquid Limit). Low density sands and fine non-plastic silts may be susceptible to collapse (liquification) when loaded in a loose state, saturated, and then shocked with a seismic load.

When the potential for any of the above problems is suspected,or seismic loading needs to be a consideration, consultation with a qualified soils engineer is recommended.

2. Construction and Traffic Loads: Two of the most common and ignored external surcharge loads that are applied to retaining structures are those related to over-compaction and traffic.

Compaction loads are created by the compactive effort of heavy mechanical tamping or rolling of backfill adjacent to a structure. Large scale tests have indicated that very large lateral earth pressures can be "locked into the soil structure" by over-compaction; in some cases this can be many times greater than the assumed active or at-rest design pressures.

Because of this potential, it is generally recommended to limit the compaction of the backfill near the structure to a maximum of about 90% or 95% of the maximum standard proctor dry density (ASTM D-698) or about 85 to 90% of relative density. Higher densities in local areas may be desired, however, to reduce seepage or for other reasons. Compaction, in these instances, should still be limited to not more than 100% of the ASTM D-698 maximum dry density or 90% of relative density.

Horizontal struts or braces should never be used to prevent wall movement of cantilever walls during backfilling or compaction. This practice will result in a redistribution of wall pressures and moments up the wall and can lead to serious distress and displacement of the wall.

Traffic loads typically vary greatly in magnitude, frequency, and point of application. For normal minor traffic loads within a distance of 1/2 the wall height from the top of the wall, an equivalent minimum surcharge of 2 feet of soil is normally adequate. (e.g., maintenance roads, farm roads, etc.). Larger or unusual loads require individual evaluation and are outlined further in Section III and V.

IV. SOIL STRENGTH AND STATES OF STRESS IN A SOIL MASS DURING WALL MOVEMENT

A. Principal Stresses and Shear Stresses

Consider an isolated element in a typical backfill without any movement or strain in the soil mass. Figure 20 shows such an element and the principal effective stresses acting on it.

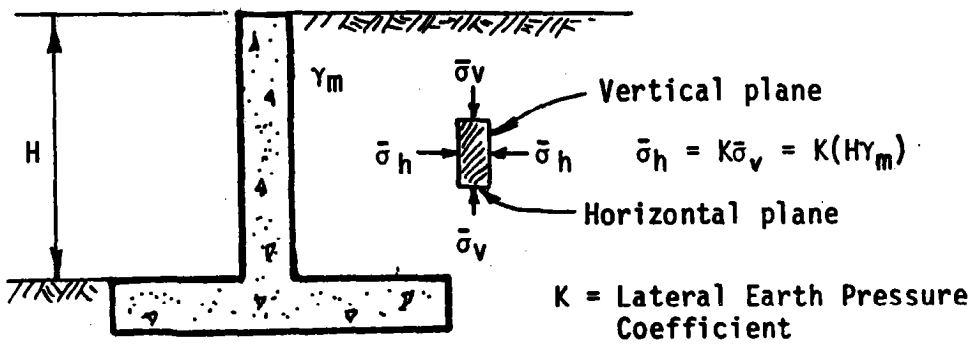

FIGURE 20 - TYPICAL PRINCIPAL STRESSES IN BACKFILL

These principal stresses, $\bar{\sigma}_h$ and $\bar{\sigma}_v$, are defined as the normal stresses acting on perpendicular planes which have no shearing stresses on them. $\bar{\sigma}_h$ acts on the vertical plane, $\bar{\sigma}_v$ acts on the horizontal plane; $\tau = o$ on both planes.

In triaxial shear testing, these planes are purposely orientated horizontally (for $\bar{\sigma}_v$) and vertically (for $\bar{\sigma}_h$) for convenience in testing and plotting of the test data.

B. Stress/Strain Relationships

If a wall is allowed to deflect away from the fill and develop some strain in the soil mass, the element also undergoes some strain, ε. In its straining, the element develops shear stresses, τ_α, and normal stresses, $\bar{\sigma}_\alpha$, which act on the potentially developing shear plane at an angle α from the horizontal. Figures 21 and 22 show the straining element and the related stresses.

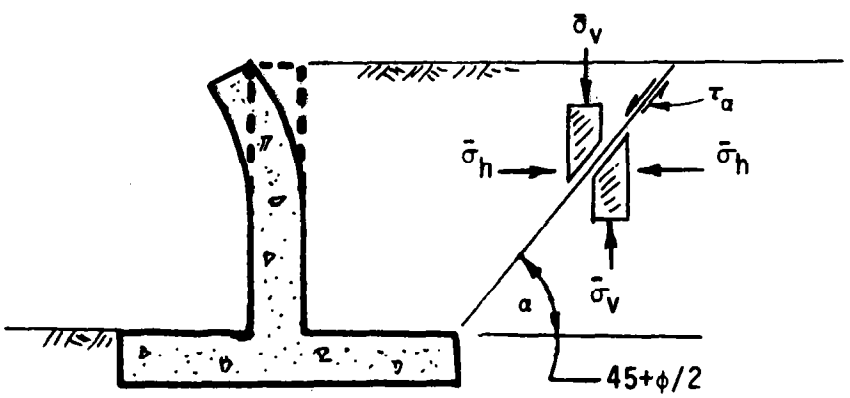

FIGURE 21 - SHEAR PLANE DEVELOPMENT BEHIND A WALL YIELDING AWAY FROM BACKFILL

$$\varepsilon = \frac{\Delta h_s}{h_s}$$

$$K = \frac{\bar{\sigma}_h}{\bar{\sigma}_v}$$

$$\alpha = 45 + \bar{\phi}/2$$

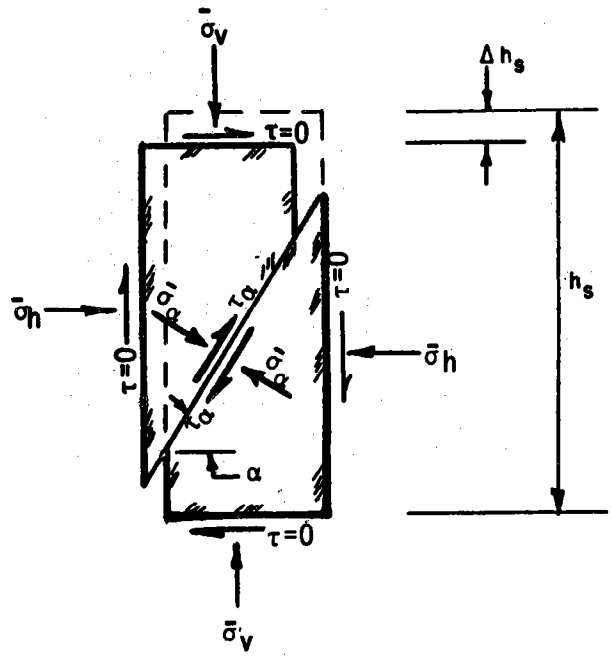

FIGURE 22 - STRESSES ON AN ISOLATED ELEMENT, SOME STRAIN, ε

These conditions are simulated in the triaxial shear test by keeping the surrounding confining pressure, $\bar{\sigma}_h$, constant, and by increasing the vertical pressure, $\bar{\sigma}_v$, on the horizontal plane until failure. During the test, the strain, ε, and shear stress, τ, are measured as they develop, and are plotted as shown on Figure 23.

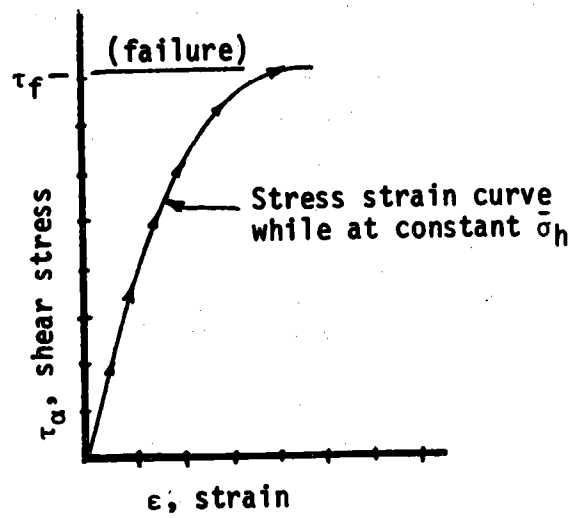

FIGURE 23 - TYPICAL STRESS/STRAIN RELATIONSHIP

C. Mohr Circle Theory and Shear Strength Envelopes

When failure of a test specimen occurs, $\bar{\sigma}_h$ and $\bar{\sigma}_v$ are plotted on what is called a Mohr strength circle diagram, as shown on Figure 24. Since $\bar{\sigma}_h$ and $\bar{\sigma}_v$ are measured in the test on vertical and horizontal planes which have no shear stress, they are each plotted at $\tau = 0$ and a Mohr strength circle (half circle) having a diameter equal to $\bar{\sigma}_v - \bar{\sigma}_h$ is drawn.

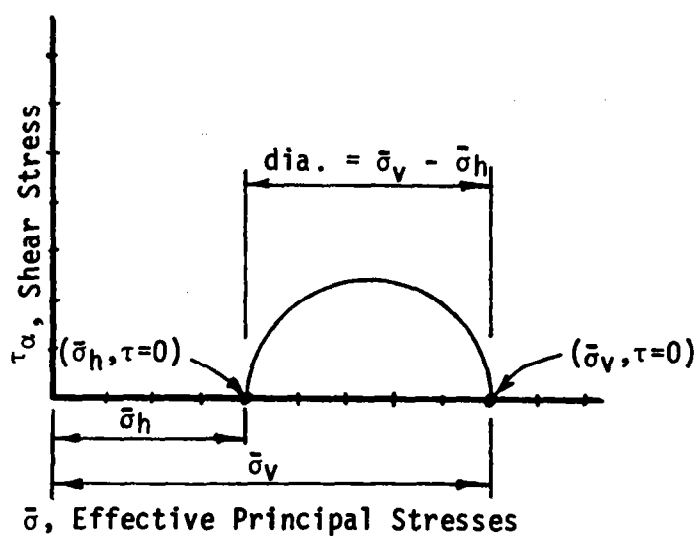

FIGURE 24 - TYPICAL MOHR STRENGTH CIRCLE

This procedure is then repeated at at least two additional higher confining pressures, $\bar{\sigma}_{h2}$ and $\bar{\sigma}_{h3}$ for second and third strength circles as shown on Figure 25.

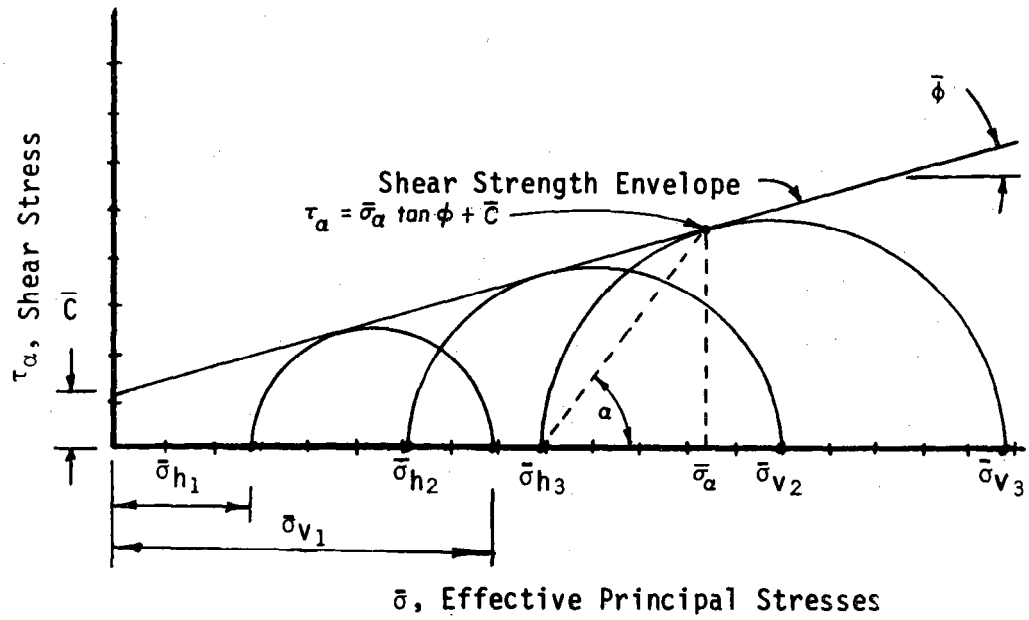

FIGURE 25 - TYPICAL MOHR STRENGTH DIAGRAM

A line is then drawn tangent to the three circles and it is called the shear strength envelope. It lays at an angle $\bar{\phi}$, the effective shear strength friction angle, and intercepts the shear stress axis at a value $\bar{C}$, the effective cohesion. The shear strength envelope represents the maximum strength a soil can mobilize when it is confined by any given confining pressure, $\bar{\sigma}_\alpha$. Note that $\tau_\alpha = \bar{\sigma}_\alpha \tan \bar{\phi} + \bar{C}$ is the equation for the shear strength envelope and that $\bar{\sigma}_\alpha$ is the confining pressure on the shear plane which is orientated at an angle α in the soil mass.

Figure 26 shows a typical shear strength envelope and a Mohr stress circle for a soil element in a fill behind a wall. The stress circle is not yet a strength circle since τ_α has not yet reached its maximum value before failure. The principal stresses $\bar{\sigma}_h$ and $\bar{\sigma}_v$ are plotted at $\tau = 0$. The shear stress, τ_α, and normal stress, $\bar{\sigma}_\alpha$, within the soil element can be obtained from the stress circle at a plane at any angle α from the horizontal. The intercepts, τ_α and $\bar{\sigma}_\alpha$ on the circle are the stresses acting in the soil

element at the same angle α from the horizontal. If the stresses $\bar{\sigma}_h$ and $\bar{\sigma}_v$ in an actual soil mass were developed to the point where failure occurs, the circle would become a strength circle and the failure angle, α, shear strength, τ_α, and normal stress, $\bar{\sigma}_\alpha$, could be determined. Most stability analyses use the equation form of the strength envelope and measure $\bar{\sigma}_\alpha$ graphically or calculate it in order to use it as input to the equation.

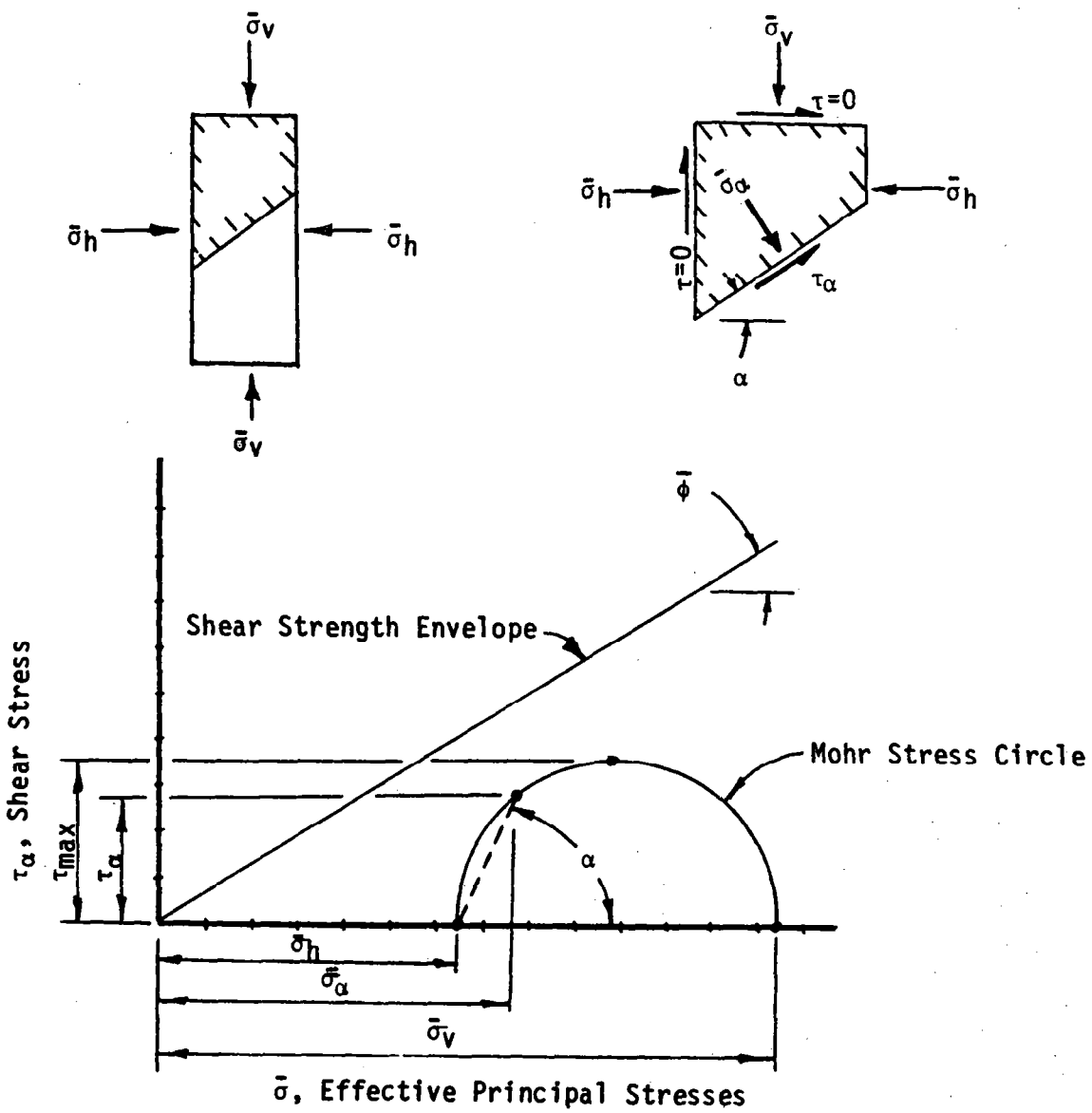

FIGURE 26 - MOHR STRESS CONDITION SHOWN ON MOHR STRENGTH DIAGRAM

D. Retaining Wall Movement and Related States of Stress

With the previous concepts in mind, we will first consider a wall that is not allowed to deflect (non-yielding or "at-rest"). Then we will consider a wall at various stages of deflection away from the backfill, and, finally, we will consider a wall that deflects toward the backfill. Figure 27 depicts the deflection considerations we will make.

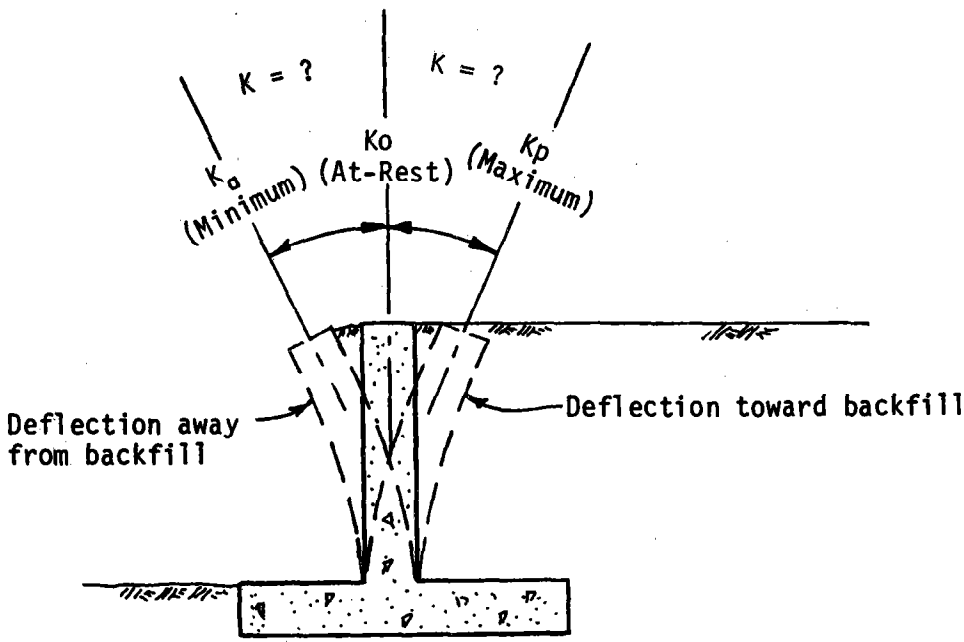

FIGURE 27 - POSSIBLE WALL DEFLECTION AND RELATED RANGE OF LATERAL EARTH PRESSURE COEFFICIENTS

1. Non-Yielding Walls - At-Rest Condition, K_o: Figure 28 shows a typical "at-rest," non-yielding condition. Since the "at-rest" condition is defined as a state of zero lateral yielding (Donath, 1981), there is no lateral strain in the soil ($\varepsilon = 0$).

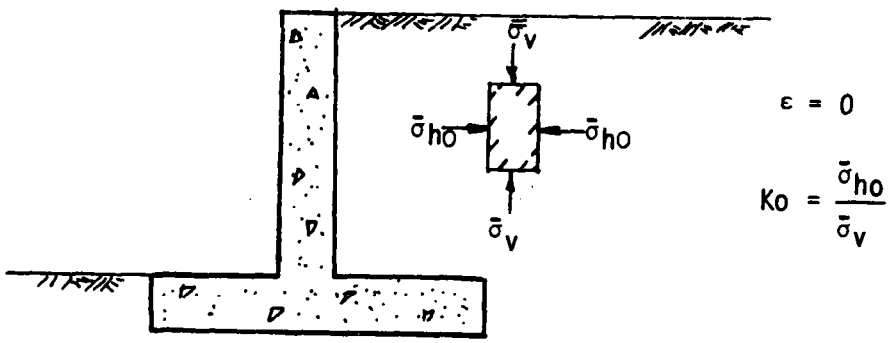

FIGURE 28 - TYPICAL AT-REST BACKFILL (NON-YIELDING)

Figure 29 shows typical "at-rest" principal stresses on the Mohr stress diagram for a normally consolidated soil (a soil that has not been loaded by greater stresses than its own weight and is no longer consolidating from its own weight). Also shown is the strength envelope for the same soil in Figure 29. Note that $\bar{\sigma}_{ho}$ and $\bar{\sigma}_v$ are plotted at $\tau = 0$.

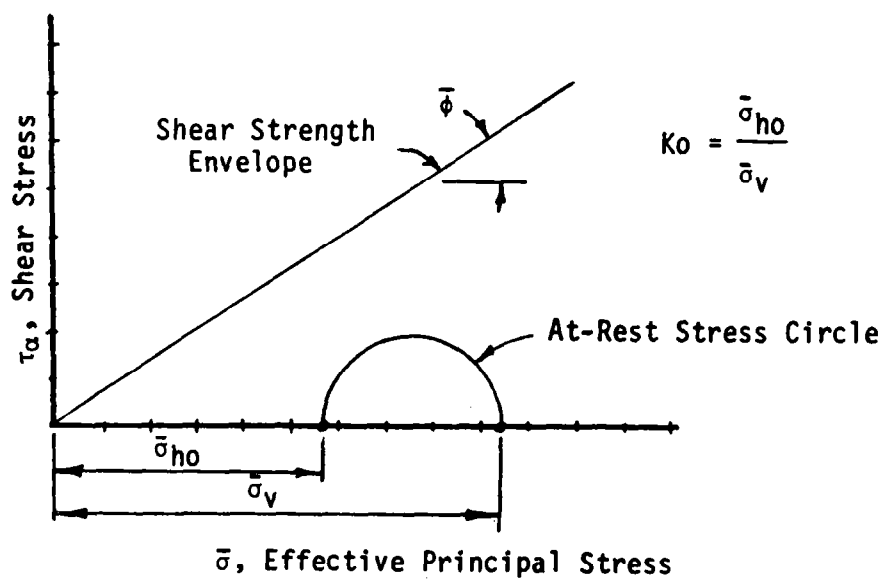

FIGURE 29 - TYPICAL AT-REST STRESSES ON MOHR STRENGTH DIAGRAM

2. Walls Yielding Away From Fill - "Active Condition," K_a: If a wall is allowed to yield away from the fill, as depicted in Figure 30, a potential shear plane begins to develop. As the element continues to strain, greater shear stresses (τ_a) begin to develop on the failure plane. As this progresses, the shear strength of the soil begins to mobilize itself on the potential shear plane to resist sliding. Deflection must occur for this mobilization to take place.

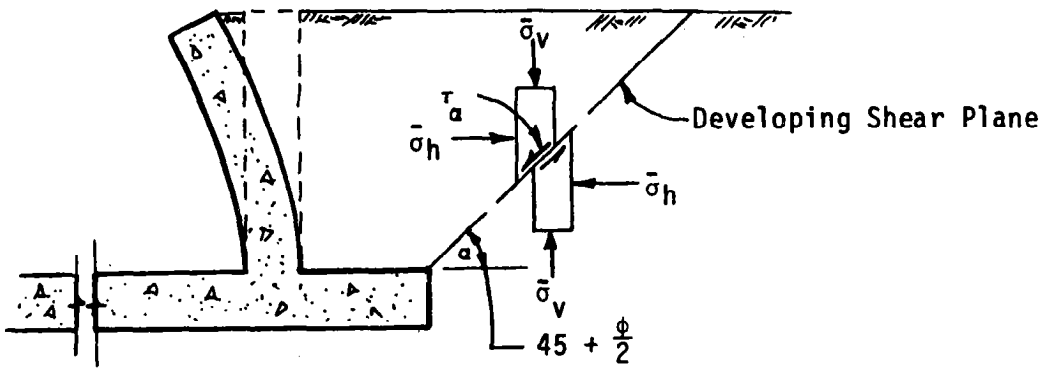

FIGURE 30 - FAILING BACKFILL BEHIND OUTWARD YIELDING WALL

As the wall yields more and more, the soil on the developing shear plane undergoes more and more strain. This, in turn, develops greater shear stresses (τ_a) on the potential shear plane, until finally the shear stresses on the failure plane equal the maximum shear strength that the soil can mobilize. The stress/strain relationship for such a process is shown in Figure 31.

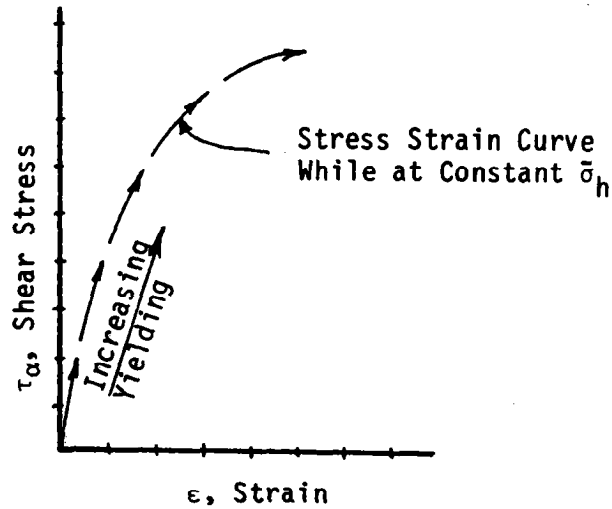

FIGURE 31 - DEVELOPMENT OF STRESS/STRAIN CURVE DURING PROGRESSIVE OUTWARD WALL DEFLECTION

This progressive increase in shear stress up to failure of the backfill can also be represented on a Mohr stress diagram. Figure 32 shows the progressive growth in stress circles toward the final failure circle (strength circle). It can be seen that as the wall progressively yields, the effective lateral earth pressure, $\bar{\sigma}_h$, reduces from its "at rest" value, $\bar{\sigma}_{ho}$, to a minimum value, $\bar{\sigma}_{ha}$, whereupon the backfill finally fails in shear. At this point, the stress circles have developed into a single strength circle which is tangent to the strength envelope. During this same yielding, the shear stress, τ_α progressively increases until it equals the maximum shear strength available in the soil on the failure plane ($\tau_\alpha = \tau_f$). At this point the shear strength of the soil is fully mobilized and the lateral earth pressure is reduced to the active lateral earth pressure, $\bar{\sigma}_{ha}$. This is the active condition, and represents the minimum possible earth pressure.

Further yielding will reduce the lateral earth pressure no more. Note that the shear stress at failure τ_f occurs on a plane at $\alpha = 45 + \bar{\phi}/2$ from the horizontal and that it is less than the maximum shear stress, $\tau_{max} = 1/2(\bar{\sigma}_v - \bar{\sigma}_h)$, which occurs on a 45° plane within the soil mass.

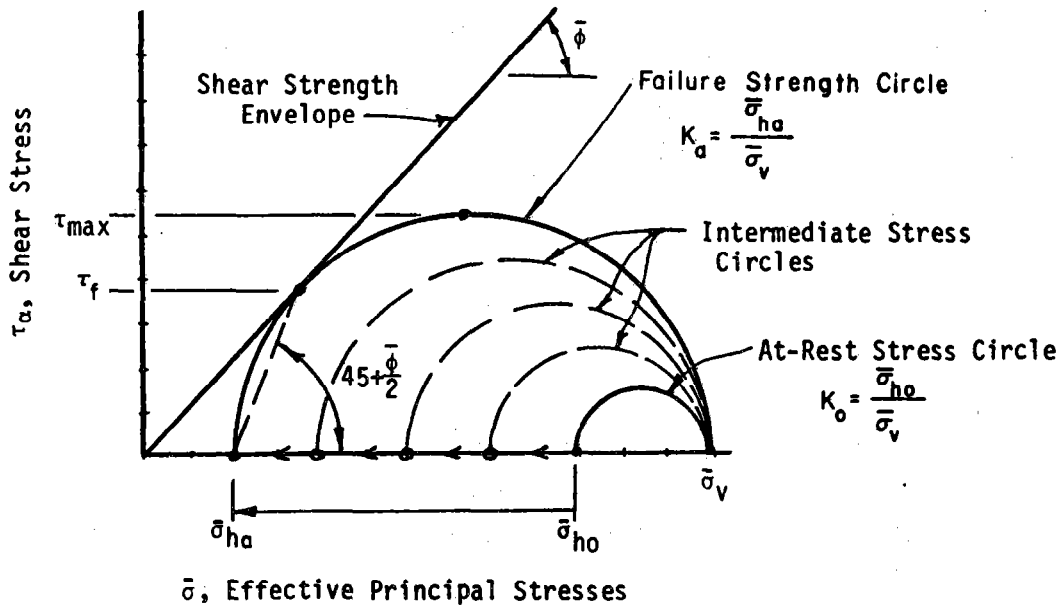

FIGURE 32 - DEVELOPMENT OF MOHR STRENGTH DIAGRAM DURING PROGRESSIVE OUTWARD WALL DEFLECTION

In practice there are varying degress of wall deflection, which, at equilibrium, may reduce the initial lateral earth pressure to something less than the at-rest pressure ($\bar{\sigma}_{ho}$), but perhaps not as low as the minimum lateral active earth pressure, $\bar{\sigma}_{ha}$. Recall that $\bar{\sigma}_{ha}$ is a <u>minimum pressure</u> where the soil is exerting its maximum resisting shear strength on its developed shear plane.

The minimum active earth pressure, $\bar{\sigma}_{ha}$, may be used for design <u>only</u> if the wall is capable of yielding, if the yielding is acceptable, and if the backfill materials are capable of permanently maintaining this state of stress. Most soils will eventually fail by creep or vibration effects and slide on the failure plane toward the wall, thus increasing the earth pressure again

above the minimum. This, in turn, causes the wall to once again deflect until the soil remobilizes its full shear strength. This process may continue repeatedly until the wall tilts or slides sufficiently to be rendered unserviceable or until the wall deflects sufficiently to develop its own elastic stiffness and resistance to a higher equilibrium earth pressure (greater than $\bar{\sigma}_{ha}$).

It is therefore recommended that walls be designed for active pressure only if they are certain to yield, if the yielding is acceptable, and if they are backfilled with coarse cohesionless soil that can permanently maintain their mobilized shear strength. If wall yielding is in question, "at-rest" pressures should be used regardless of the backfill materials. Evaluations of intermediate conditions are impractical for most design procedures because of the indeterminate stress-strain relationships between concrete and soil and the many dependent variables of soil materials and soil conditions.

3. Walls Yielding Toward Fill - "Passive Condition", K_p: Let us now consider a wall yielding toward the backfill, as shown in Figure 33.

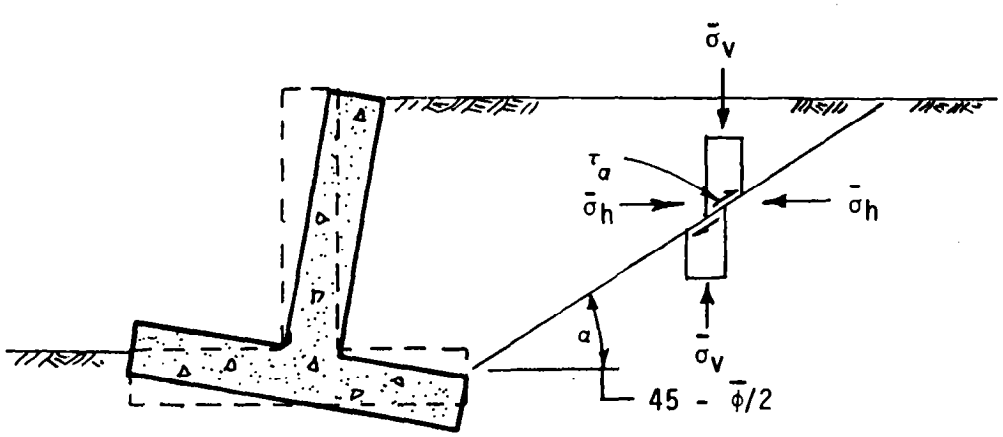

FIGURE 33 - FAILING BACKFILL BEHIND INWARD YIELDING WALL

As with the case of a wall yielding away from the fill, a potential shear plane begins to develop here also. The inclination of the failure plane is at a flatter angle, however, than for the active case ($45^o - \bar{\phi}/2$ vs. $45^o + \bar{\phi}/2$). As the element strains in horizontal compression, shear stresses, τ_α, begin to develop along the potential failure plane. As this progresses, the shear strength of the soil begins to mobilize itself to resist sliding on the shear plane. As the wall continues to deflect more and more into the soil, more and more strain develops. This, in turn, develops greater shear stresses (τ_α) on the potential shear plane until finally, the soil fails when the shear stress on the failure plane equals the maximum shear strength that the soil can mobilize. The wall has now developed the maximum passive earth pressure. This progressive increase in shear stress until failure can also be represented on a Mohr stress diagram as shown on Figure 34. Beginning with the "at-rest" stress circle we can see that as the wall progressively moves toward the backfill, the effective lateral earth pressure, $\bar{\sigma}_h$, increases until $\bar{\sigma}_h = \bar{\sigma}_v$ (the stress circles become smaller and smaller until the circle becomes a point at $\bar{\sigma}_h = \bar{\sigma}_v$ and $\tau_\alpha = 0$). As the wall continues to move into the backfill, the stress circles begin to enlarge into the passive range where $\bar{\sigma}_h > \bar{\sigma}_v$. During this movement, the shear stresses reverse direction and again develop on the potential shear plane. Eventually, the increasing shear stress equals the maximum shear strength that the soil can mobilize on the failure plane. At this point, the stress circles have developed into a strength circle which is tangent to the strength envelope. The soil has now developed its maximum passive lateral earth pressure, $\bar{\sigma}_{hp}$. Continued deflection of the wall will only slide the soil wedge on the failure plane and will not develop greater pressures on the wall. Again, it can be seen that in practice there are varying degrees of deflection which, at equilibrium, will produce lateral earth pressures greater than the "at-rest" value, $\bar{\sigma}_{ho}$, but possibly less then the fully-developed passive value, $\bar{\sigma}_{hp}$.

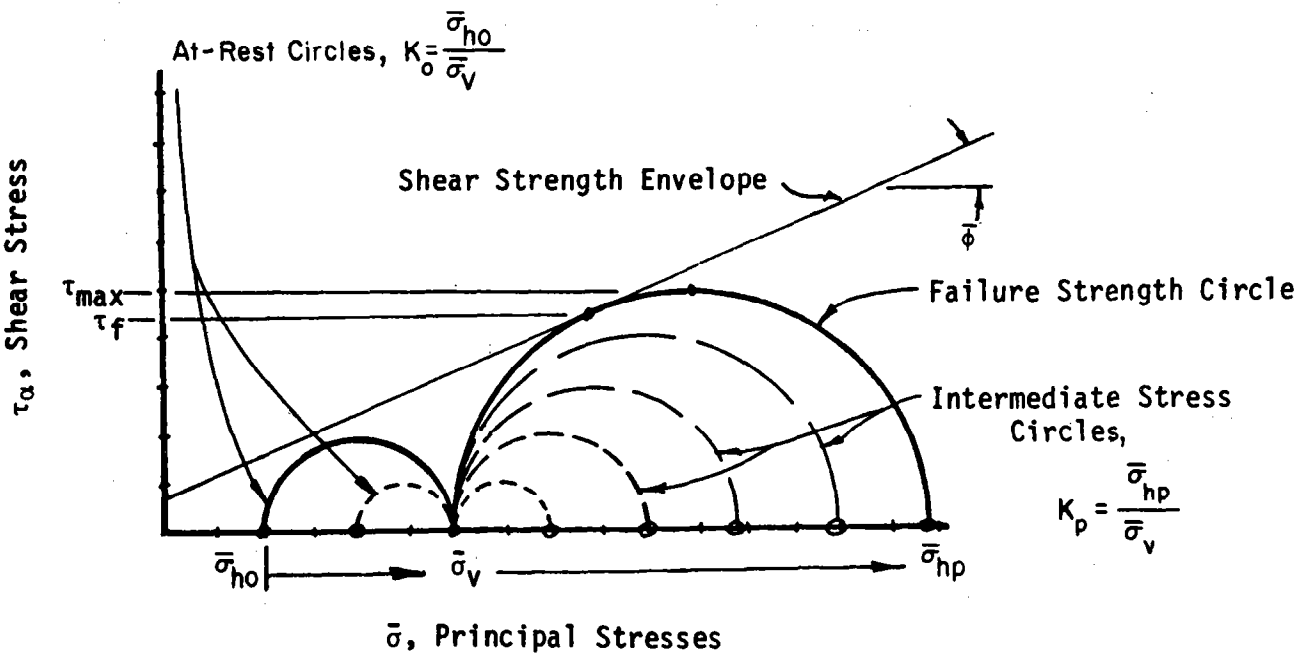

FIGURE 34 - DEVELOPMENT OF MOHR STRENGTH DIAGRAM DURING PROGRESSIVE INWARD WALL DEFLECTION

One may ask, "How can passive earth pressures be developed on a retaining wall?"

There are several ways. One of the more common, but unsuspected ways, is by overcompacting the backfill near the wall. "More" is not necessarily better, in this case, since overcompaction can create and "lock in" very high stresses; well into the passive range. Unfortunately, most specifications do not require an upper limit on compaction and consequently this possibility gets overlooked and some walls become damaged. In extreme cases, walls have been broken after temporary struts were placed at the top of them to stop the excessive deflection during heavy overcompaction. Additional guidance on this problem is contained in Section III.

Two other ways are graphically shown in Figure 35 and 36. These can be easily overlooked during a routine stability analysis where only sliding and overturning are checked. Figure 35 shows possible differential settlement of the foundation created by the added weight of the backfill or surcharge. This type of movement is actually simple foundation settlement which commonly occurs at pressures that are much lower than the allowable bearing capacity of the soil! This type of movement can also be brought about by wetting of collapsible sands and silts or liquefaction of sensitive fine silts and clays during dynamic loading.

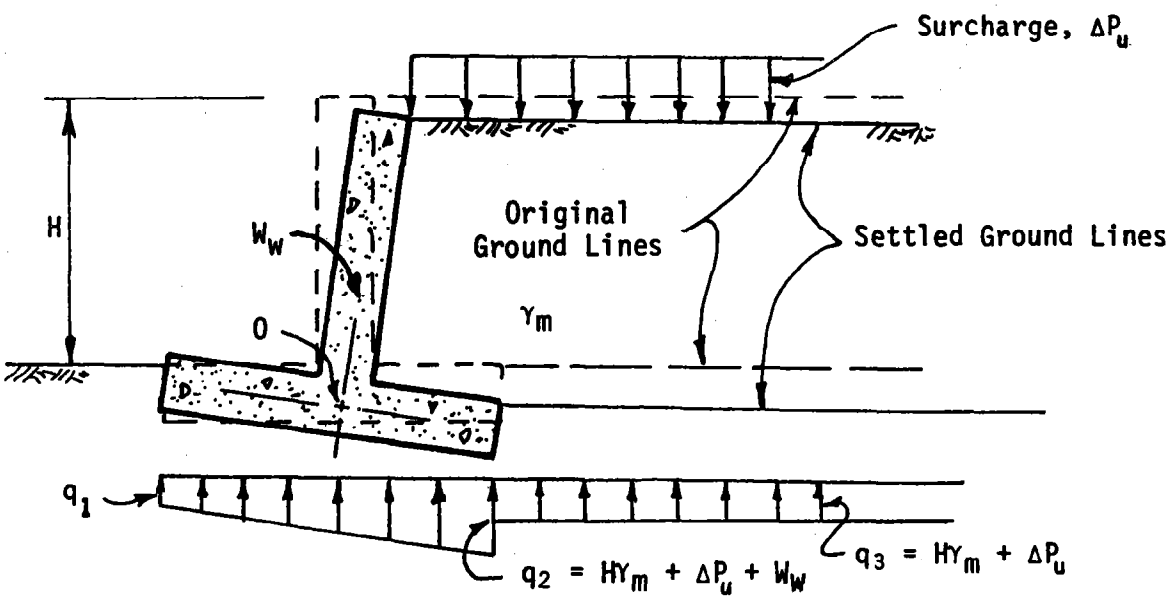

FIGURE 35 - DIFFERENTIAL FOUNDATION SETTLEMENT BENEATH FOOTING AND FILL

Figure 36 shows the elastic rebound which can develop in medium to fine grained elastic soils or in overconsolidated silts and clays. A wall, for example, may be installed in a recent excavation. Long term rebound of the overconsolidated soil in the excavated area may break the footing or tip the structure and load the wall into the passive range.

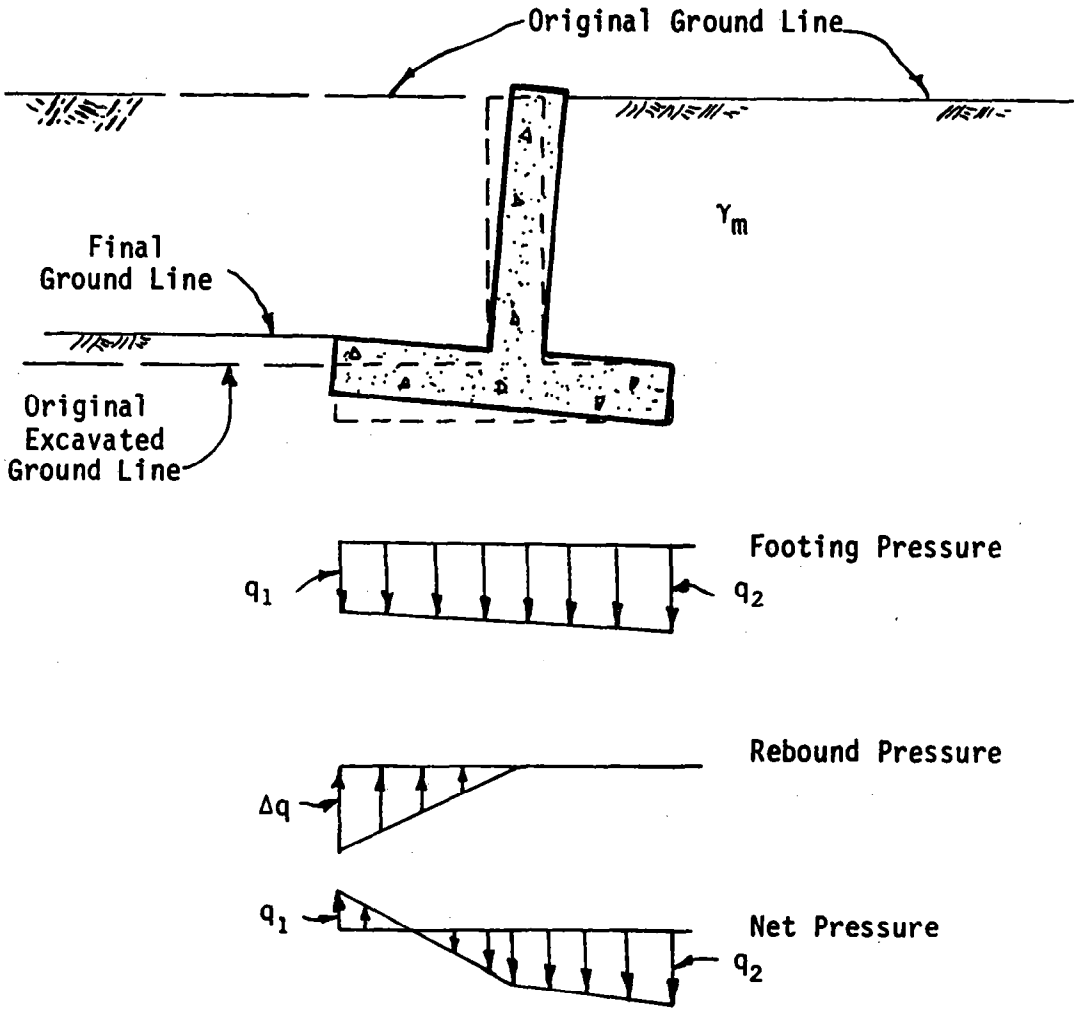

FIGURE 36 - ELASTIC REBOUND OF FOUNDATION EXCAVATION AFTER CONSTRUCTING WALL

4. Wall Movement Effect on Pressure Diagram: An important consideration to be made is the type of wall movement which may occur. If a retaining wall rotates about its base, the earth pressure diagram can be reasonably assumed to be triangular as shown in Figure 37.

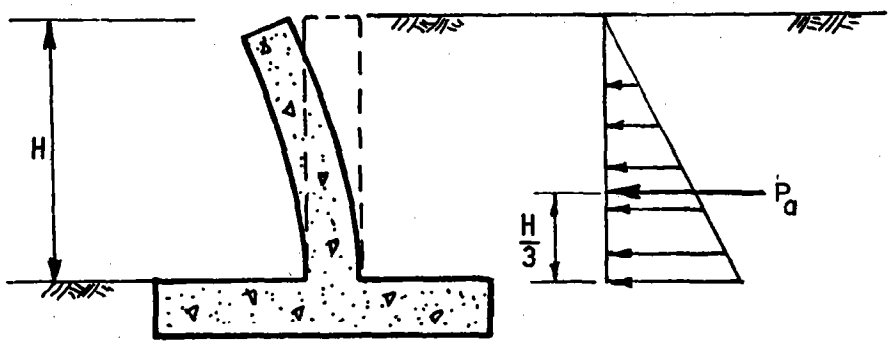

FIGURE 37 - PRESSURE DIAGRAM: WALL ROTATING ABOUT BASE

If, however, a wall moves laterally by sliding, the pressure distribution changes to an arched or parabolic shape as shown in Figure 38. The resultant force, P_a, is essentially unchanged, however, its location changes considerably and may significantly affect the shear and bending moment diagrams of the wall.

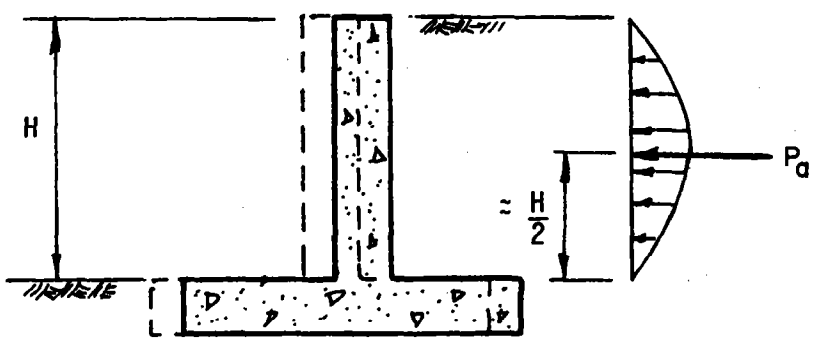

FIGURE 38 - PRESSURE DIAGRAM: WALL SLIDING ALONG BASE

If a wall should rotate about its top (because of anchors, struts, soil rebound, etc.) the pressure diagram changes to a modified parabolic shape, as shown in Figure 39. Again, the resultant force, P_a, is essentially unchanged; however, the location of the resultant is considerably higher on the wall which significantly changes the walls' shear and bending moment diagrams.

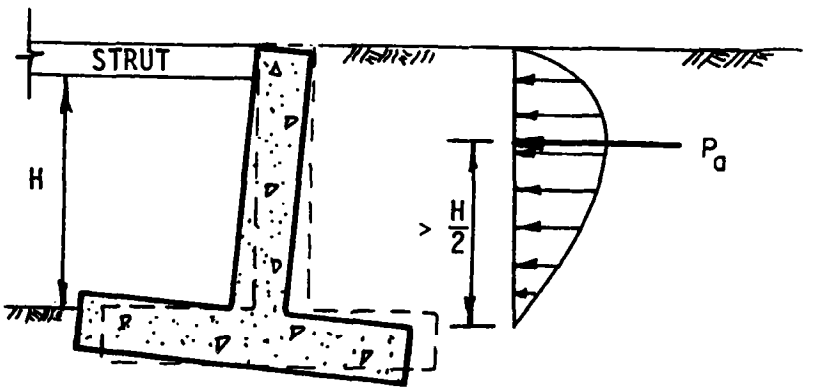

FIGURE 39 - PRESSURE DIAGRAM - WALL ROTATING ABOUT TOP

Most SCS structures are designed against sliding and overturning, thus, in most cases, lateral movement or rotation about the top of the wall is not usually encountered.

5. Anchor Movement and Related States of Stress: Most anchors, such as anchor walls and anchor plates, depend entirely on developing passive earth pressures for stability. Consequently, it is very important that the state of stress be considered in design.

One of the most commonly overlooked considerations when designing anchors is shown in Figure 40. In order for the full passive resistance of the anchor to develop, the shear plane of the passive resistance of the anchor must not be interrupted. Interruption can be caused by the intersection of the active shear plane of the wall, a change of soil type, etc.

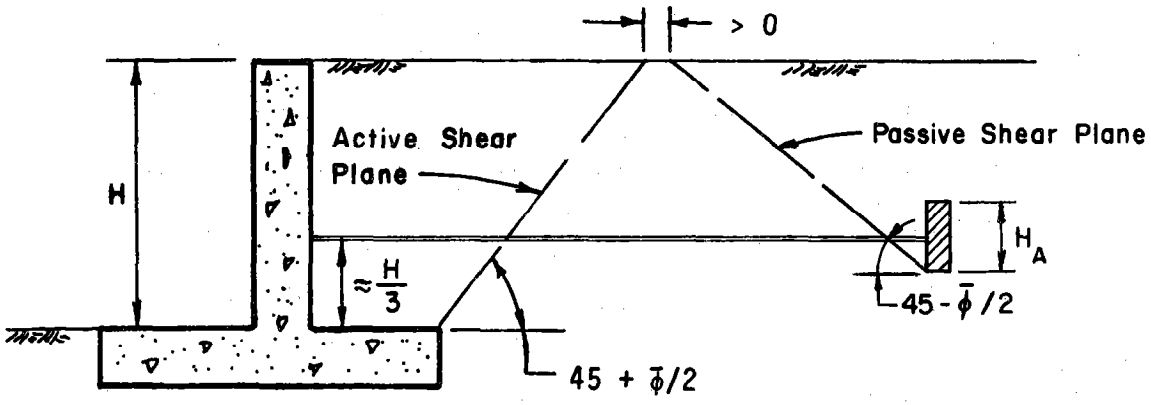

FIGURE 40 - ANCHOR PLACEMENT AND RELATED SHEAR ZONES

Another commonly overlooked consideration when designing anchors or thrust blocks is that considerably more movement is necessary to mobilize full passive pressures than is required to mobilize active pressures. The tolerability of the structure to the required movement must be considered. In the case of thrust blocks, cutoff walls, shear keys, etc., the horizontal compression and stress-strain response of the resisting soil must be considered. In the case of tied back anchors, for example, this compression (required to mobilize the anchor blocks' assumed passive pressure) is delivered to the anchored wall directly by the tie rods, and, the wall itself will deflect accordingly. Generally a larger safety factor (such as 2 or 3) is and should be used for anchors because of this. If a structure is sensitive to such required movements, and is dependent on passive pressures for stability, consultation with a qualified soils engineer is recommended.

When anchors extend downward from the ground surface the passive and active shear surfaces extend to the ground surface on nearly plane surfaces as shown in Figure 41a. For this case, full active and passive pressure diagrams can be assumed. The anchorage or thrust force should be located near the 1/3 point of the wall in order to assure hydrostatic shaped pressure diagrams.

When anchors are buried, the stress distribution and shear surfaces change dramatically as shown in Figure 41b. Experience has shown, however, that so long as the anchor is not buried deeper than twice its height ($H \leq 2H_A$), full passive and active pressure diagrams (to the ground surface) may be assumed with reasonable accuracy.[5/,12/]

Deep anchors ($H > 2H_A$), however, must be expected to yield by shearing through the soil without developing a shear failure plane up to the ground surface as shown in Figure 41c. This displacement occurs along curved surfaces of sliding toward a zone of expansion above and behind the anchor. The resisting force for this type of anchor is approximately equal to the bearing capacity of a footing whose base is at a depth $H - \frac{H_A}{2}$ below the ground surface. Appropriate bearing capacity equations can be used for this approximation so long as due attention is also given to the footing shape and water table conditions.

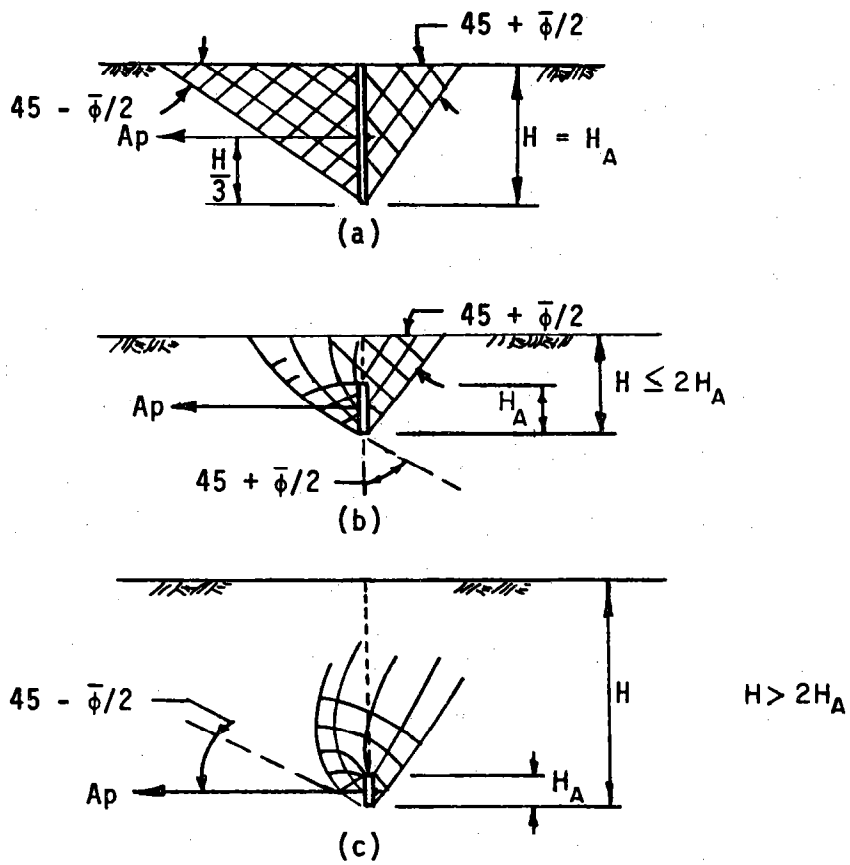

FIGURE 41 - ANCHOR DEPTH AND RELATED STATES OF STRESS

V. EARTH MATERIALS AND RELATED EARTH PRESSURES

This section explains and contains the recommended earth load design values for the design of SCS structures. The selection of the appropriate lateral earth pressure coefficient, or equivalent fluid pressure, is dependent on: (A) the type of backfill materials, and (B) the amount and direction of wall movement. Lateral earth pressures are to be determined by the procedures and figures referenced in Figure 42. The designer is cautioned, however, to review other portions of this technical release as appropriate before proceeding.

A. Type of Backfill Materials

1. Clean coarse sands and gravels having less than 5% fines are defined in the Unified Soil Classification System as SW, SP, GW, and GP. Also included in this grouping are manufactured backfill materials such as crushed rock, furnace slag, etc. These soils normally have shear strength angles, $\bar{\phi}$, greater than 27 degrees. In determining the lateral earth pressure coefficients for these materials, effective shear strengths, ($\bar{\phi}$), from consolidated drained shear strength tests (direct or triaxial) should be used. Specimens for these tests should be remolded and compacted at the density and moisture content that will be specified for the backfill and should be saturated before the consolidation phase of the shear test. In the absence of shear test data, or with very coarse materials, judgement and experience must be used to estimate $\bar{\phi}$; consultation with a qualified soils engineer in this case is recommended.

These backfill materials do not normally require a significant amount of compaction. Compaction is usually controlled by relative density tests or equipment methods. In most instances, they should not be compacted to more

than about 85 to 90% of relative density, if relative density testing is used, or, with a moderate amount of rolling with light to medium weight equipment, if an equipment method is used. Heavy equipment rolling is usually not necessary and could damage the structure by overstressing its walls.

Figures 43, 44, and 45 are intended for use with these types of materials, depending on the type of wall yielding as indicated on each of the figures.

2. The "other" soils include all backfill materials with more than 5% fines such as SC, SM, GC, GM, CL, and ML, in accordance with the Unified Soil Classification System, and those coarser soils with strengths less than $\bar{\phi} = 27^{\circ}$. Figure 44 is used to determine lateral earth pressure coefficients for these materials against a non-yielding wall (at-rest condition). As with the clean coarse sands and gravels, effective shear strengths, $\bar{\phi}$, from consolidated drained triaxial shear tests, or consolidated undrained shear tests with pore pressure measurements, can normally be used. However, if saturation of the backfill will be allowed, or can possibly occur, the use of the total shear strength (ϕ) from consolidated undrained triaxial shear tests may be more appropriate. The possibility of sizemic loading, rapidly applied surcharges, or a very flexible wall (sheet piling, etc.), that responds to loads quickly, increases the appropriateness of using the undrained strength parameter, ϕ. If this possibility exists, the designer should use the total shear strength (ϕ), or consult with a qualified soils engineer before using greater values. Specimens should be remolded and compacted at the density and moisture content that will be specified for the fill and should be saturated before consolidation to simulate a saturated condition in the backfill. In the absence of shear test data, judgment and experience must be used to estimate ϕ or $\bar{\phi}$; consultation with a qualified soils engineer is recommended.

Figure 46 is used to determine equivalent fluid pressures for these materials against a yielding wall (active condition). Sufficient field and/or lab data, including Unified Soil Classifications, should be obtained to verify the assumed type of backfill when using these equivalent fluid pressures.

Normally, compaction of these materials is controlled by compaction tests. These materials should not be compacted to more than about 90 to 95% of maximum standard Proctor dry density (ASTM D-698) except when they are intended as relatively thin impervious zones to minimize seepage around cutoff walls, headwall extensions, antiseep collars, etc. In these areas, compaction should still be limited to not more than 100% of the ASTM D-698 maximum dry density, however.

3. Materials which are highly organic, OL, OH, and PT, or have moderate-to-high swelling potential (LL > 50 such as CH and MH) should not be used as backfill or be allowed to remain in the backfill prism defined on Figure 42.

B. Amount and Direction of Wall Movements

Figure 42 indicates three types of wall movement: (1) yielding away from fill, (2) non-yielding, and (3) yielding toward fill.

1. Walls Yielding Away from Fill: Walls can yield outward by four separate mechanisms: (a) sliding, (b) overturning, (c) rotation of the toe due to erosion, bearing capacity failure, or settlement, and (d) deflection of the stem. Most walls are designed against movement away from the backfill by the first three mechanisms with a significant safety factor (usually

1.5 to 3), consequently, the type of movement is usually restricted to (c) deflection of the stem. Researchers[4/25/] have found that the wall deflection required to fully mobilize the shear forces in the backfill (such that active pressures are achieved) varies from about 0.5 to 1%, depending on the soil type, density, and a number of other variables. Because of the complexity and number of variables involved, and the indeterminate dependent relationship between the moduli of elasticity of the concrete and that of the backfill along a potential shear plane, further refinement is not practical for most design problems. An evaluation of the typical range of lateral earth pressures commonly encountered on SCS structures indicates that if the ratio of wall thickness to height of wall is equal to or less than about 0.085 (E_c = 50,000,000 psi) the deflections at the top of the wall will be in the order of 1% or more. Consequently this has been established as a recommended limit ($^t/H \leq 0.085$), below which adequate stem deflection can be relied on to develop active pressures.

Figure 43 is used for clean coarse backfill in the yielding condition; Figure 46 is used for all other soils in the yielding condition.

2. Nonyielding: These walls are defined as walls with a stiffness such that the outward deflection is less than that required to fully mobilize the active shear strength in the backfill ($t/H > 0.085$), or are otherwise restrained against deflection. Because of the minimum section thickness required for placement of two mats of reinforcing steel, small overall proportions, and restraint by headwalls, wingwalls, etc., a great number of SCS structures fall into this category.

At-rest lateral earth pressure coefficients for normally consolidated coarse grained cohesionless soil are represented by the $K_o = 1 - \sin \bar{\phi}$ curve in Figure 44.[13/] This relationship is based on triaxial shear tests under conditions of zero radial strain. Recommended at-rest lateral earth pressure coefficients for soil not meeting the requirements for the above are represented by the "at-rest" curve in Figure 44. This curve is based on experience and reviews of available research data.[9/] While it is recognized that these are somewhat emperical data, these values are recommended for non-yielding walls until methods are developed to fully evaluate the equilibrium stress and deflection condition between soil backfill and concrete structures.

Since Figure 44 does not include the effects of a sloping earthfill surcharge, Figure 47 has been included for that purpose.

3. Walls Yielding Into Fill: These walls are defined as walls that have sufficient inward deflection to develop passive pressures. The actual amount of inward deflection required to develop passive pressure is variable. It is known, however, that it is several times greater than that required to develop active pressures. The maximum passive pressure does not develop until the wall has moved enough to develop a shear plane upward through the backfill. This requirement and the acceptability of movement of a structure should be considered before assuming that full passive pressure will be developed.

Figure 45 is used to determine passive lateral earth pressure coefficients. The curves are extrapolated for values of ϕ less than 27° for use in evaluating existing structures and for the design of anchor thrust blocks where better backfill materials cannot be economically used.

C. Hydrostatic Loads

These loads are to be included unless positive measures are taken to insure that saturation of the backfill cannot develop. Positive measures include free draining backfill zones, weep holes, drain pipes, impervious zones at the top of the backfill, etc. Unless weepholes and drains are fairly large, some local head buildup will occur at the base of the walls since they require some head to operate. The amount of head will depend on the size of the drain zones, the size and number of weep holes, the drain pipe perforation and/or screen sizes, seepage or groundwater quantities, etc. These factors should be carefully evaluated and conservatively estimated if uncertain. SCS Soil Mechanics Notes 1, 3, 5 and 7 contain helpful guidance in the proportioning of drains and estimating the heads and seepage through drain zones, pipes, etc.

D. Surcharge Loads

Surcharge loads add significantly to the lateral earth pressure against walls and may change the location of the resultant earth pressure force.

1. Sloping Backfill Surcharge Loads: These are assumed to be applied to compacted earth placed under nonsaturated conditions and at a rate that allows dissipation of excess pore pressures. If a rapidly applied surcharge load on a saturated backfill is possible, see Section III on how it may affect the total wall pressure.

The computation of sloping backfill surcharge loads depends on the type of wall deflection and the type of backfill material:

a. For clean, coarse backfill materials having less than 5% fines placed against yielding walls, the effects of sloping surcharges are included in the lateral earth pressure coefficients, K_a or K_p in Figures 43 and 45, respectively.

b. For backfill materials having more than 5% fines placed against yielding walls, the effects of sloping surcharges are included in the lateral Equivalent Fluid Pressures (EFP_h) in Figure 46.

c. For either type of backfill material placed against non-yielding walls Figure 44 and 47 should be used. The effective lateral earth pressure for level backfill from Figure 44 must be multiplied by a load factor, F, obtained from Figure 47 ($\bar{\sigma}_h = KF\bar{\sigma}_v$). This is necessary since the non-yielding earth pressure coefficients (K_o) on Figure 44 are independent of any surcharge loads. ($K_o = 1 - \sin\bar{\phi}$ and "At-Rest" curves, respectively.)

2. Line and Point Surcharge Loads: These can be estimated from the procedures shown in Figure 48.[10/] These procedures are for surcharge loads that are applied relatively slowly. Rapidly applied loads to saturated soils (especially fine-grained saturated soils) can result in considerably different lateral earth pressures. See Section III or consult with a qualified soils engineer in this case.

Figure 49 provides a procedure to account for the effects of a line load on a heel.[16/] The assumption of the presence of a line load is not recommended for stability analysis unless the line load is permanent. Stability should also be assured for the condition when a line load is not present.

3. Uniform Surcharge Loads: For most situations, the uniform surcharge is assumed to act uniformly with depth along the height of the wall. The surcharge is simply added to the vertical effective earth pressure and then multiplied by the appropriate lateral earth pressure coefficient (See Section III).

In the event that a uniform surcharge must be considered along with equivalent fluid pressures (as in Figure 46 where equivalent fluid pressures are used rather than lateral earth pressure coefficients), the pressure against the wall at any depth is increased to account for the surcharge by an amount $K\Delta P_u$, where ΔP_u is the uniform surcharge pressure and K is for soil types 1 through 5 as appropriate and listed on Figure 46.

E. Heel Length Estimates for Retaining Walls

Figure 50 provides a method to make a first estimate of the base length of the heel. It is not intended for final design.

F. Friction Between Soil and Concrete

Figure 51 indicates ranges of probable coefficients of friction between soil and concrete which can be used in stability analysis. These values have been taken from several sources and have been summarized here.18/,19/,20/,21/

G. Typical Earth Pressure Diagrams

Figure 52 shows several typical earth pressure diagrams which are commonly encountered in practice.

MINIMUM LATERAL EARTH PRESSURE COEFFICIENTS AND EQUIVALENT FLUID PRESSURES (E.F.P.)

BACKFILL MATERIALS*	TYPE OF WALL DEFLECTION		
	YIELDING AWAY FROM FILL	NON-YIELDING	YIELDING INTO FILL
Clean, coarse sands and gravels with less than 5% fines (SW,SP,GW,GP) and $\bar{\phi} \geq 27^0$	Active earth pressure coefficient, K_a, from Figure 43	At Rest earth pressure coefficient, K_o, from the $K_o = 1 - \sin \bar{\phi}$ curve shown on Figure 44.	Passive earth pressure coefficient, K_p, from Figure 45
All other soils with more than 5% fines or $\bar{\phi} < 27^0$ **	Active equivalent fluid pressures, EFP, from Figure 46	At Rest earth pressure coefficient, K_o, from the K_o = at rest curve shown on Figure 44.	Not recommended for design of walls. May use dashed curves on Fig. 45 for K_p to evaluate existing situations or design of anchor blocks only.

* Within a prism defined by a 0.5:1 sloping line projecting upward from a point 2 feet out from the base of the wall to within 2 feet of the backfill surface.

**Swelling soils, soils with LL > 50, and organic soils (OL,OH,Pt), cannot be used for backfill and must be removed from the prism area defined above.

Yielding walls are defined as having a thickness-to-height ratio less than 0.085 ($t/H \leq 0.085$). Non-yielding walls are defined as having a thickness-to-height ratio greater than 0.085 ($t/H > 0.085$) or otherwise restrained.

FIGURE 42

ACTIVE CONDITION: $t/h \leq 0.085$; Wall deflects away from fill; clean coarse sands and gravels with less than 5% fines (SW, SP, GW, GP) and $\bar{\phi} \geq 27°$

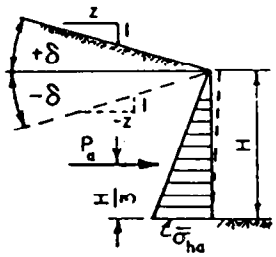

$$K_a = \left[\frac{\cos \bar{\phi}}{1 + \sqrt{\sin \bar{\phi} (\sin \bar{\phi} - \cos \bar{\phi} \tan \delta)}} \right]^2$$

$$P_a = K_a \frac{\gamma_m H^2}{2}$$

$$\bar{\sigma}_{ha} = K_a \gamma_m H$$

K_p = Coefficient of passive pressure

γ_m = Moist unit weight of soil

γ_{sub} = Bouyant unit weight of soil to be used in place of γ_m if soil is saturated.

ϕ = Consolidated undrained shear strength angle for all other backfill where water is present and soil will not drain upon loading.

$\bar{\phi}$ = Consolidated drained shear strength angle for clean coarse grained backfill.

δ = Surcharge slope

Z = Surcharge slope (cotangent of δ), See narrative for appropriatness of ϕ vs $\bar{\phi}$.

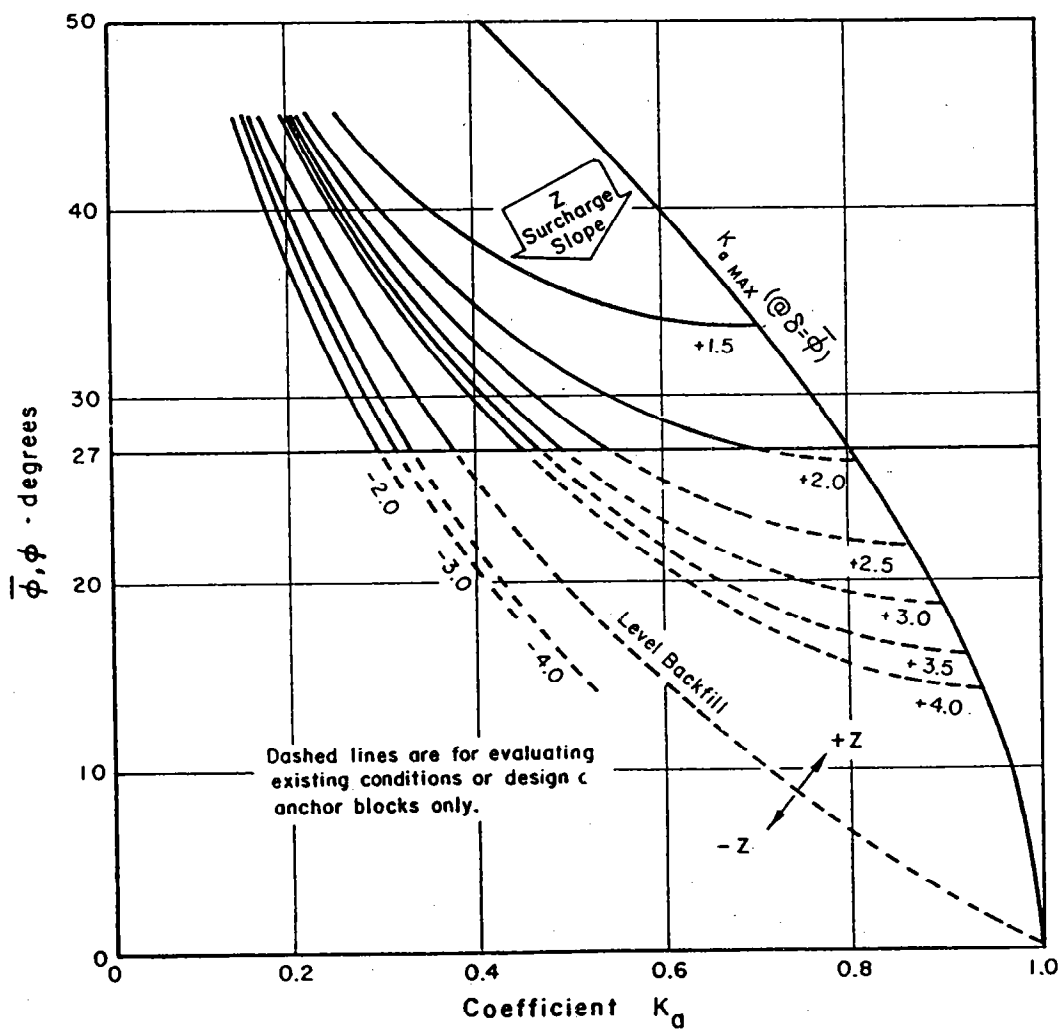

COEFFICIENT OF ACTIVE LATERAL EARTH PRESSURE

FIGURE 43

(210-VI, TR-74, July 1989)

NON-YIELDING CONDITION:
$t/h > 0.085$ or otherwise restrained; use "$1 - \sin\bar{\phi}$" if $<5\%$ fines and $\phi > 27°$
use "At Rest" if $>5\%$ fines or $\phi < 27°$

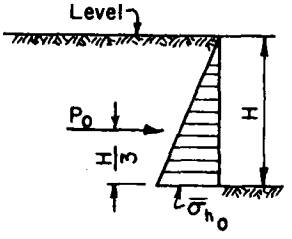

$$P_o = K_o \frac{\gamma_m H^2}{2}$$

$$\bar{\sigma}_{h_o} = K_o \gamma_m H$$

γ_{sub} = Bouyant unit weight of soil - to be used in place of γ_m if soil is saturated.

γ_m = Moist unit weight of soil.

$\bar{\phi}$ = Consolidated drained shear strength angle for clean coarse grained backfill.

ϕ = Consolidated undained shear strength angle for all other backfill where water is present and soil will not readily drain upon loading.

See Figure 47 to correct for sloping backfill surcharge.

See narrative for appropriatness of ϕ vs $\bar{\phi}$.

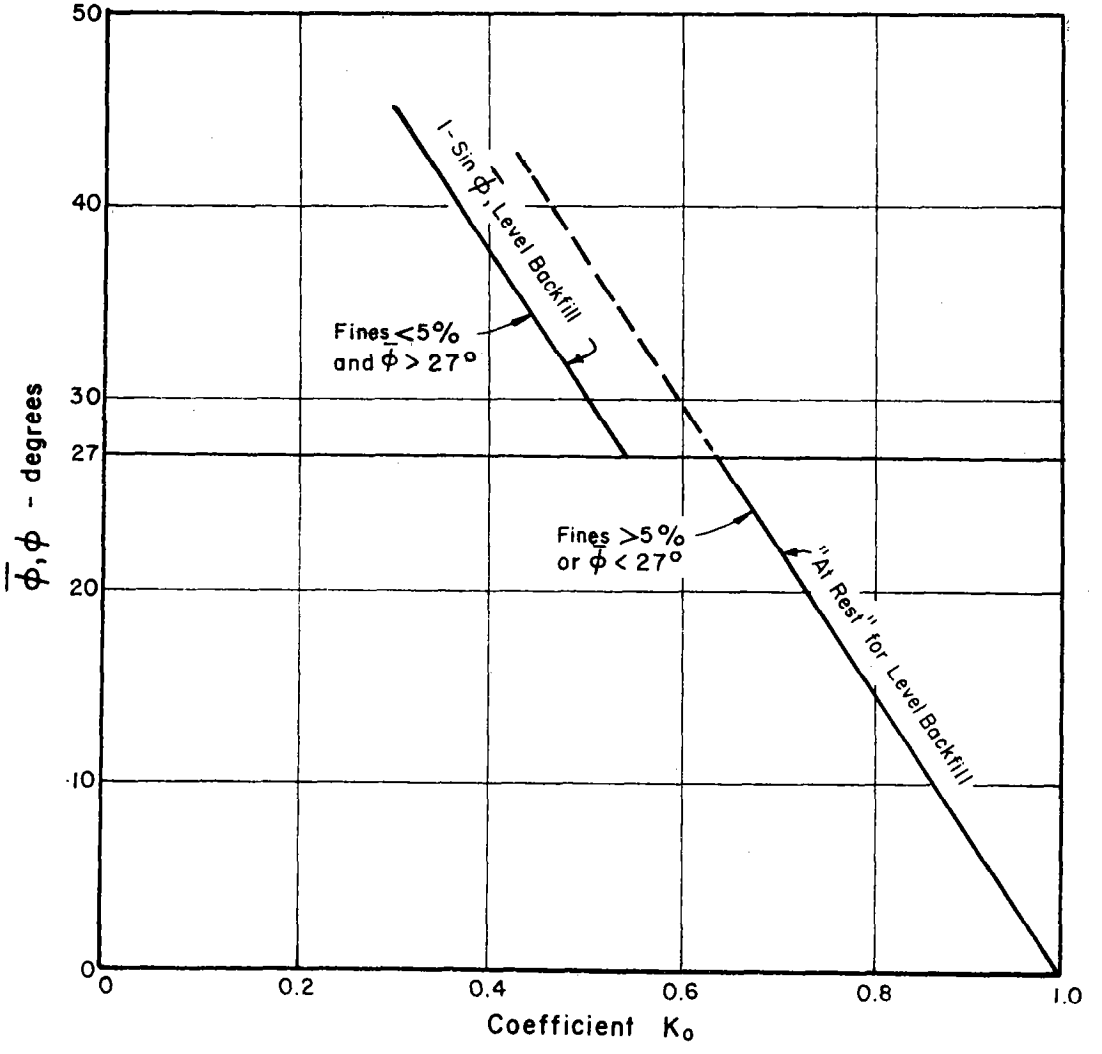

COEFFICIENT OF AT REST LATERAL EARTH PRESSURE

FIGURE 44

PASSIVE CONDITION : Wall deflects into fill

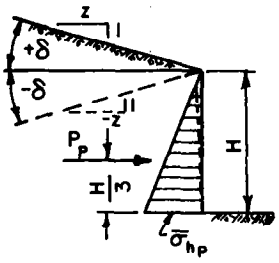

$$K_p = \left[\frac{\cos \bar{\phi}}{1 - \sqrt{\sin \bar{\phi} (\sin \bar{\phi} + \cos \bar{\phi} \tan \delta)}} \right]^2$$

$$P_p = K_p \frac{\gamma_m H^2}{2}$$

$$\bar{\sigma}_{hp} = K_p \gamma_m H$$

K_p = Coefficient of passive pressure

γ_m = Moist unit weight of soil

γ_{sub} = Bouyant unit weight of soil to be used in place of γ_m if soil is saturated.

ϕ = Consolidated undrained shear strength angle for all other backfill where water is present and soil will not drain upon loading.

$\bar{\phi}$ = Consolidated drained shear strength angle for clean coarse grained backfill.

δ = Surcharge slope

Z = Surcharge slope (cotangent of δ), See narrative for appropriatness of ϕ vs $\bar{\phi}$.

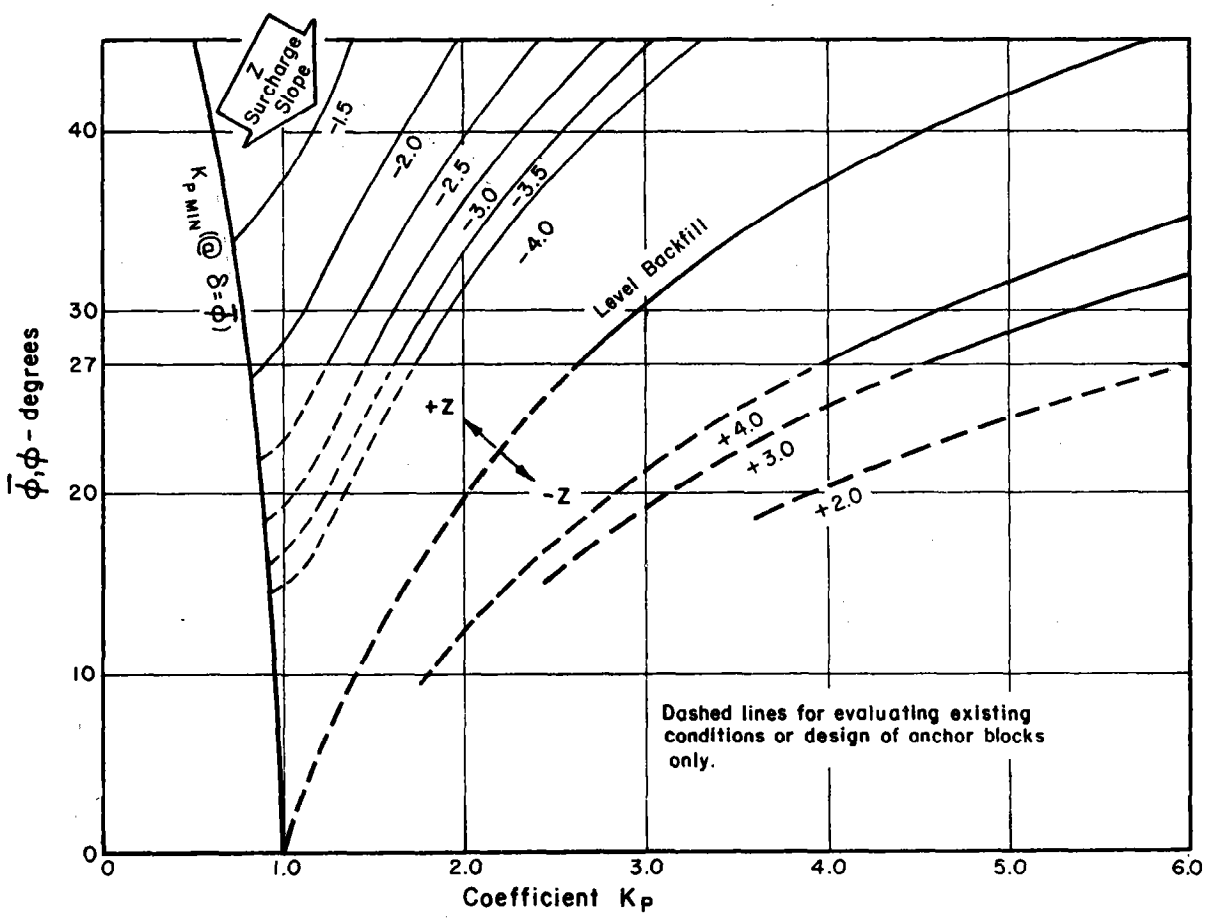

COEFFICIENT OF PASSIVE LATERAL EARTH PRESSURE

FIGURE 45

(210-VI, TR-74, July 1989)

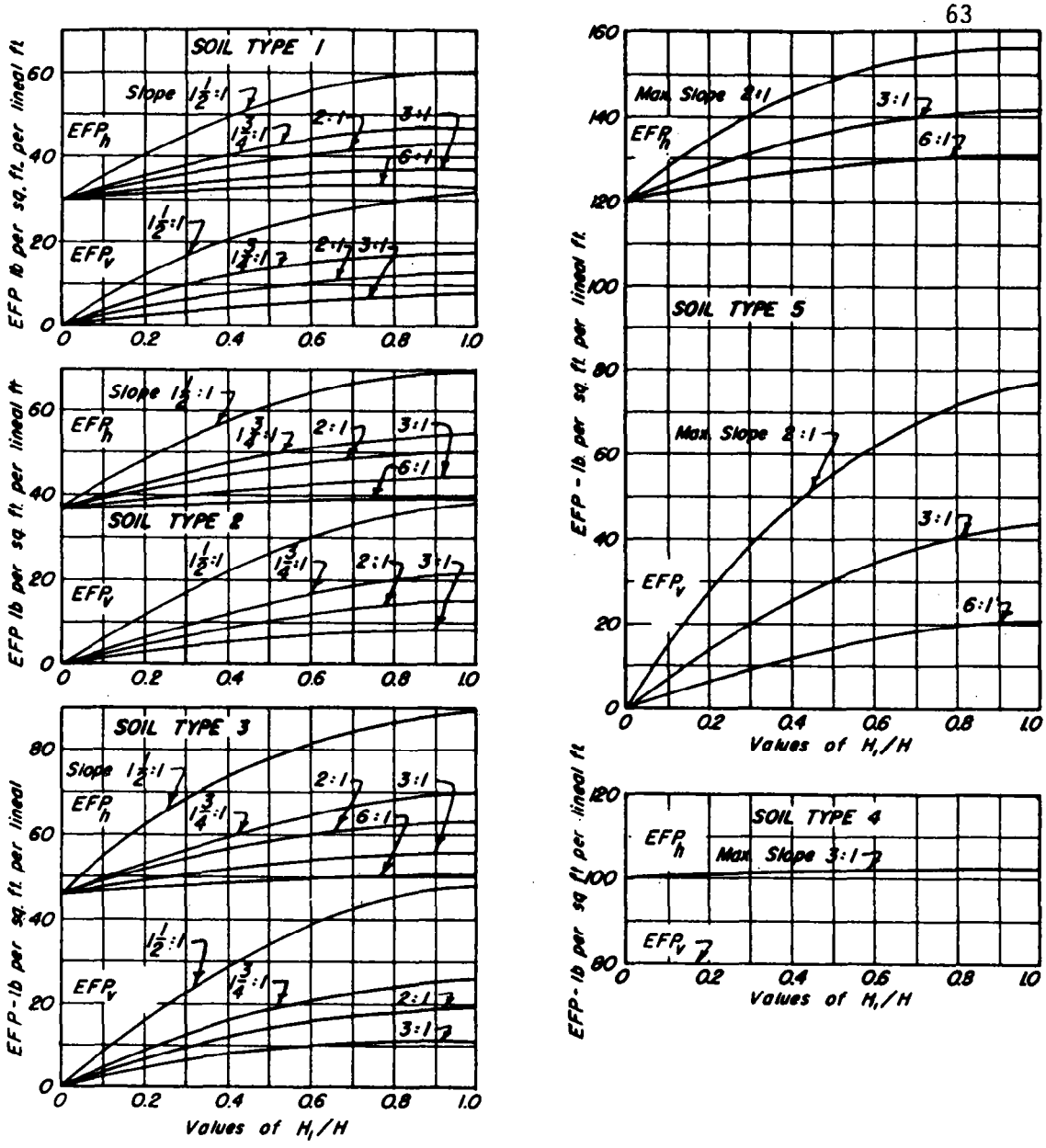

TYPES OF BACKFILL

1. Clean sand or gravels, K=0.27
2. Coarse grained soil of low permeability, K=0.3
3. Fine silty sand, and granular materials with conspicuous clay content, K=0.39
4. Soft clay, organic silt, or silty clays K=1.0
5. Medium or stiff clay deposited in chunks and protected in such a way that a negligible amount of water enters the voids. K=1.0

(Suggested K value for transfer of other surcharge loads.)

$P_a = 1/2\ EFP_h\ H^2$

$P_v = 1/2\ EFP_v\ H^2$

H_1=0 When fill surface is below these levels for the appropiate analysis

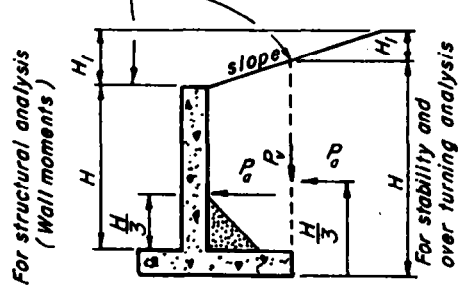

EQUIVALENT FLUID PRESSURE, EFP, FOR MOIST SOILS IN THE ACTIVE CONDITION AGAINST YIELDING WALLS (t/h<0.085) (Hydrostatic pressure not Included)

FIGURE 46

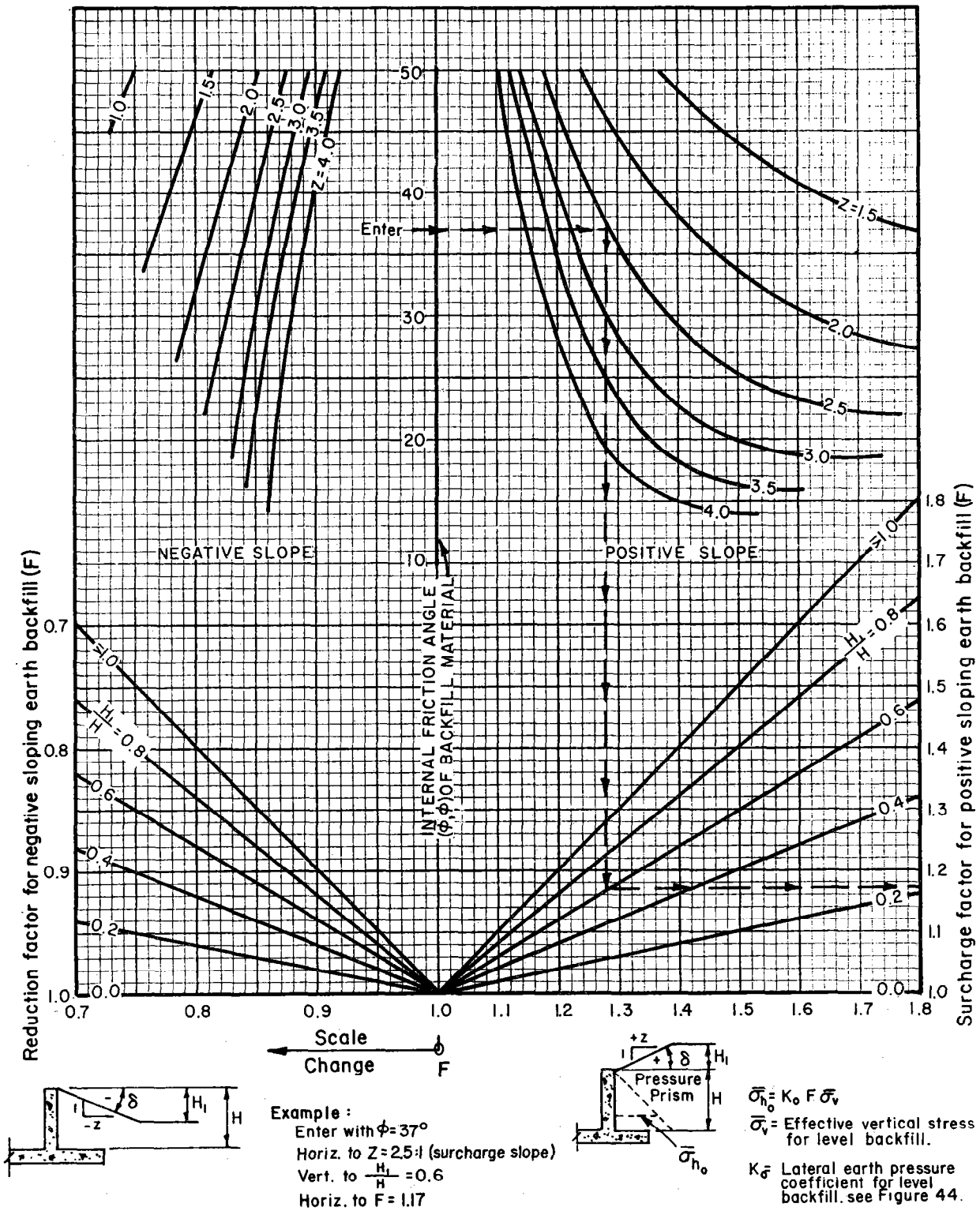

PRESSURE FACTORS FOR COMPUTING AT-REST LATERAL EARTH PRESSURE INCREASE DUE TO SLOPING SURCHARGE LOAD

FIGURE 47

(210-VI, TR-74, July 1989)

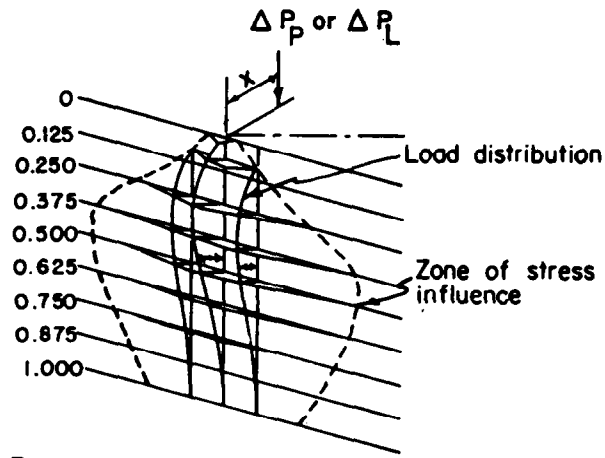

Pressure Distribution

NOMENCLATURE

ΔP_P = Point load in lbs.

ΔP_L = Line load lb/ft.

X = Horiz. distance from wall in ft. (min 2.0)

S = Lat. distance pt. to load in ft.

d = Vert. distance pt. to load in ft.

$r = \sqrt{X^2 + S^2 + d^2}$

$\bar{\sigma}_{hc}$ = Lateral effective pressure in lb./ft.² due to point surcharge load.

$\bar{\sigma}_{h_L}$ = Lateral effective pressure in lb./ft.² due to line surcharge load.

Point Load

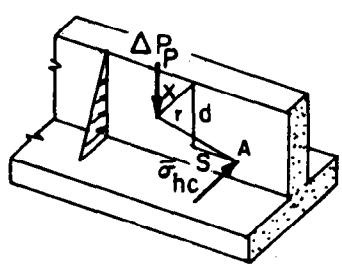

$$\bar{\sigma}_{hc} = 0.95\,\Delta P_P \frac{X^2 d}{r^5}$$

$$V_A = 0.3167\,\Delta P_P \left[\frac{1}{X} - \frac{X^2}{(X^2+d^2)^{3/2}}\right]$$

$$M_A = 0.3167\,\Delta P_P d \left[\frac{1}{X} - \frac{1}{(X^2+d^2)^{1/2}}\right]$$

on plane ⊥ to wall thru load. (S = 0)

Line Load

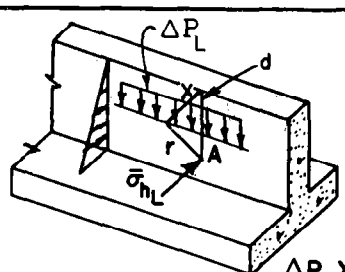

$$\bar{\sigma}_{h_L} = 1.27\,\frac{\Delta P_L X^2 d}{r^4}$$

$$V_A = 0.635\,\Delta P_L \left[1 - \frac{X^2}{(X^2+d^2)}\right]$$

$$M_A = 0.635\,\Delta P_L \left(d - X\tan^{-1}\frac{d}{X}\right)$$

where $\tan^{-1}\frac{d}{X}$ is expressed in radians

π radians = 180°

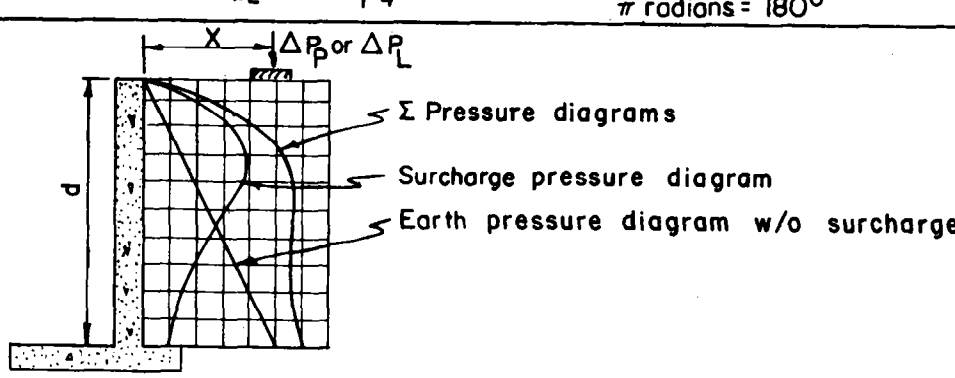

LATERAL EARTH PRESSURE DUE TO POINT [10/] OR LINE SURCHARGE LOADS

FIGURE 48

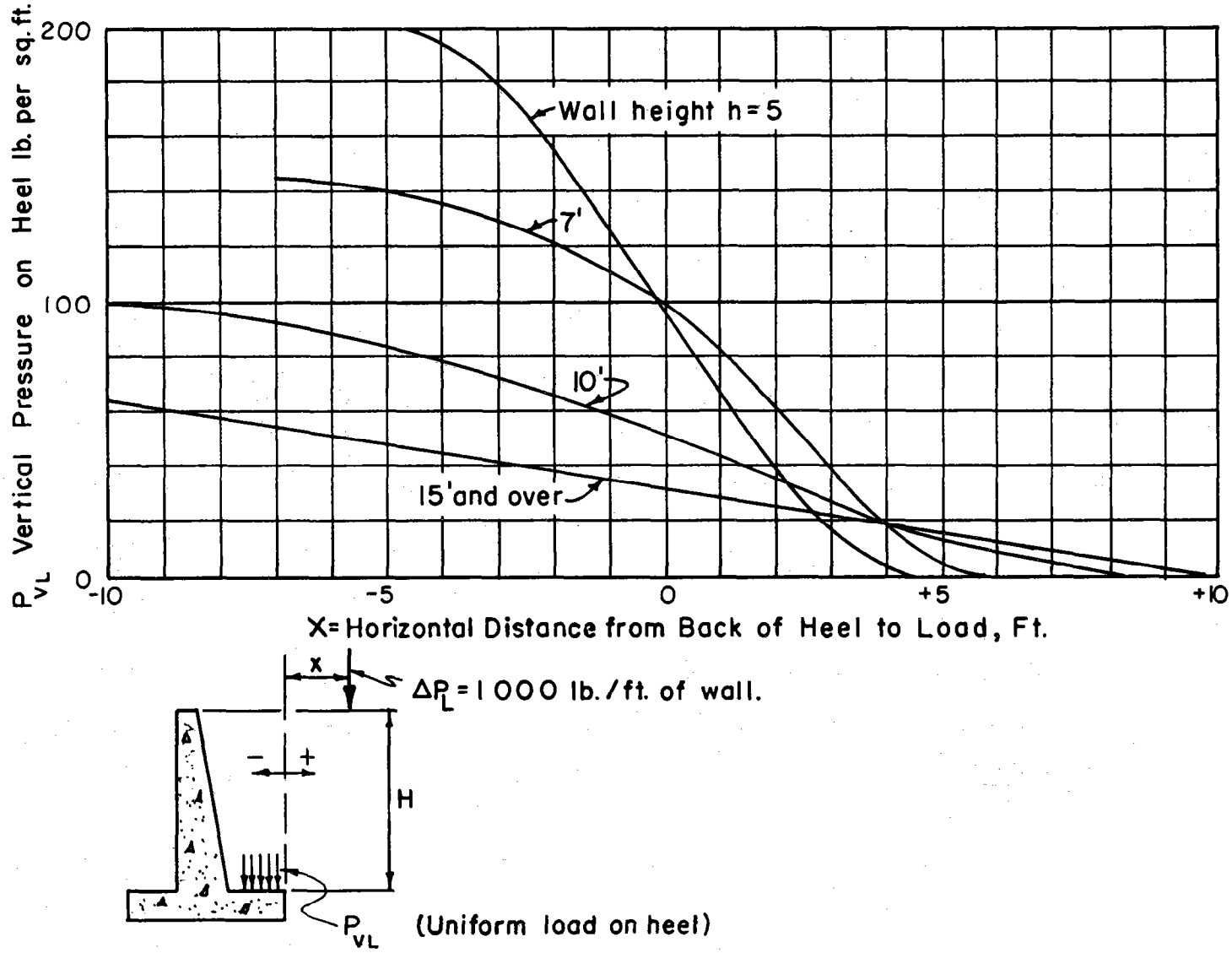

VERTICAL PRESSURE EFFECTS ON HEEL DUE TO LINE LOADS

FIGURE 49

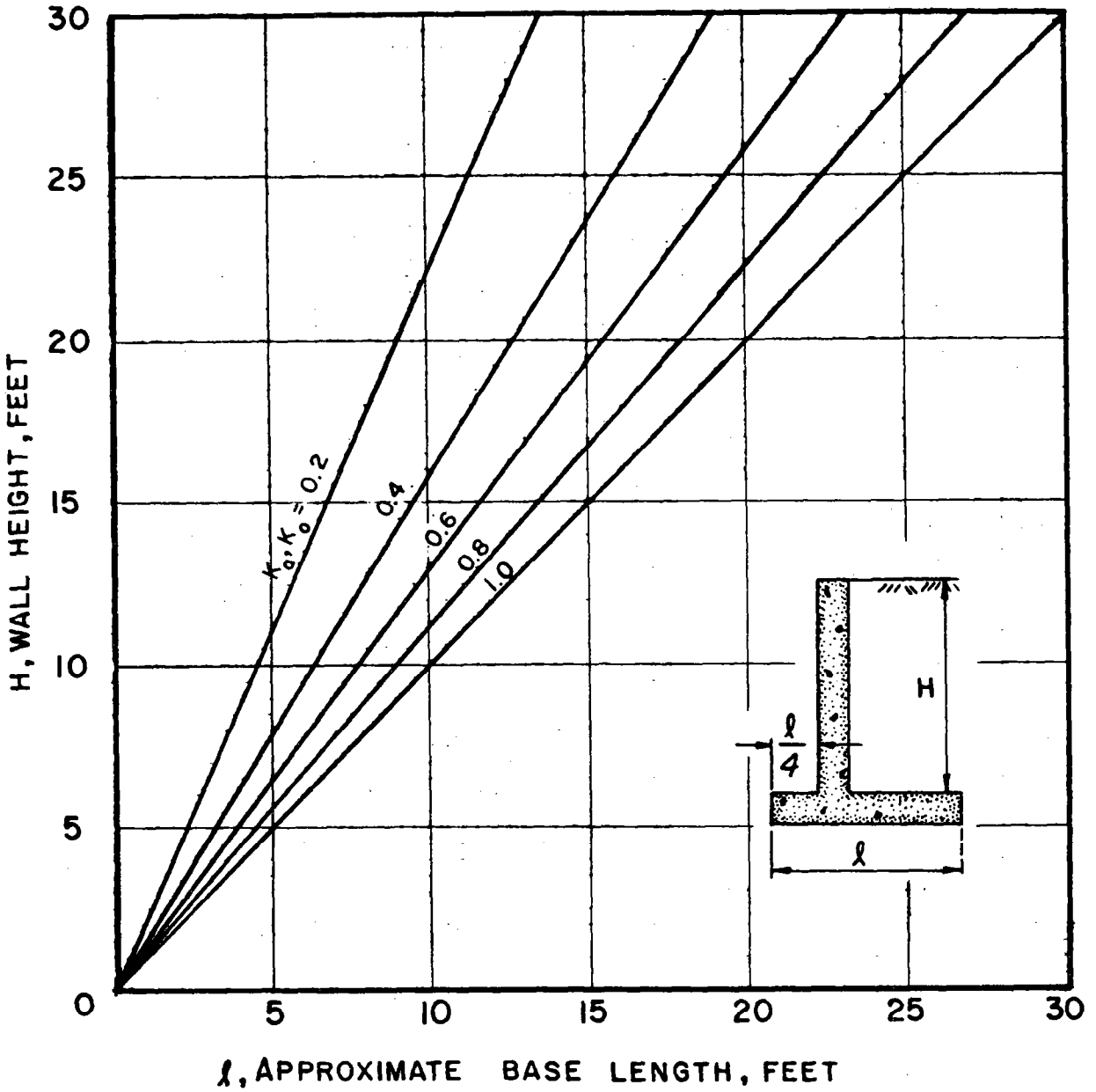

Adjustment to charts ℓ value:

1. Without toe ---------- use 0.9 ℓ

2. With sloping fill surcharge ------- 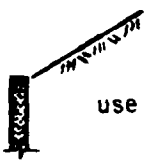 use 1.1 ℓ

APPROXIMATE BASE LENGTH FOR RETAINING WALL (Not for Final Design)

FIGURE 50

(210-VI, TR-74, July 1989)

MATERIAL	ϕ_f range
Clean, hard rock	0.6 - 0.7
Clean gravels, angular, well-graded	0.5 - 0.6
Sandy gravels, angular, well-graded	0.4 - 0.5
Sandy gravels, rounded, poorly-graded	0.3 - 0.4
Silty, sandy gravels	0.3 - 0.5
Silty sands	0.3 - 0.35
Fine sandy silts	0.27 - 0.35
Dry clays, medium to dense	0.4 - 0.5
Wet clays, medium to dense	0.25 - 0.35
Stiff clays, clayey silts	C (cohesion)
Soft clays, clayey silts, organic soils	Not recommended

Interpolations must be made giving consideration to moisture conditions, gradations, angularity of particles, density, cementation, etc.

FIGURE 51 - TYPICAL COEFFICIENTS OF FRICTION BETWEEN CONCRETE AND SOIL

TYPICAL LATERAL EARTH PRESSURE DIAGRAMS

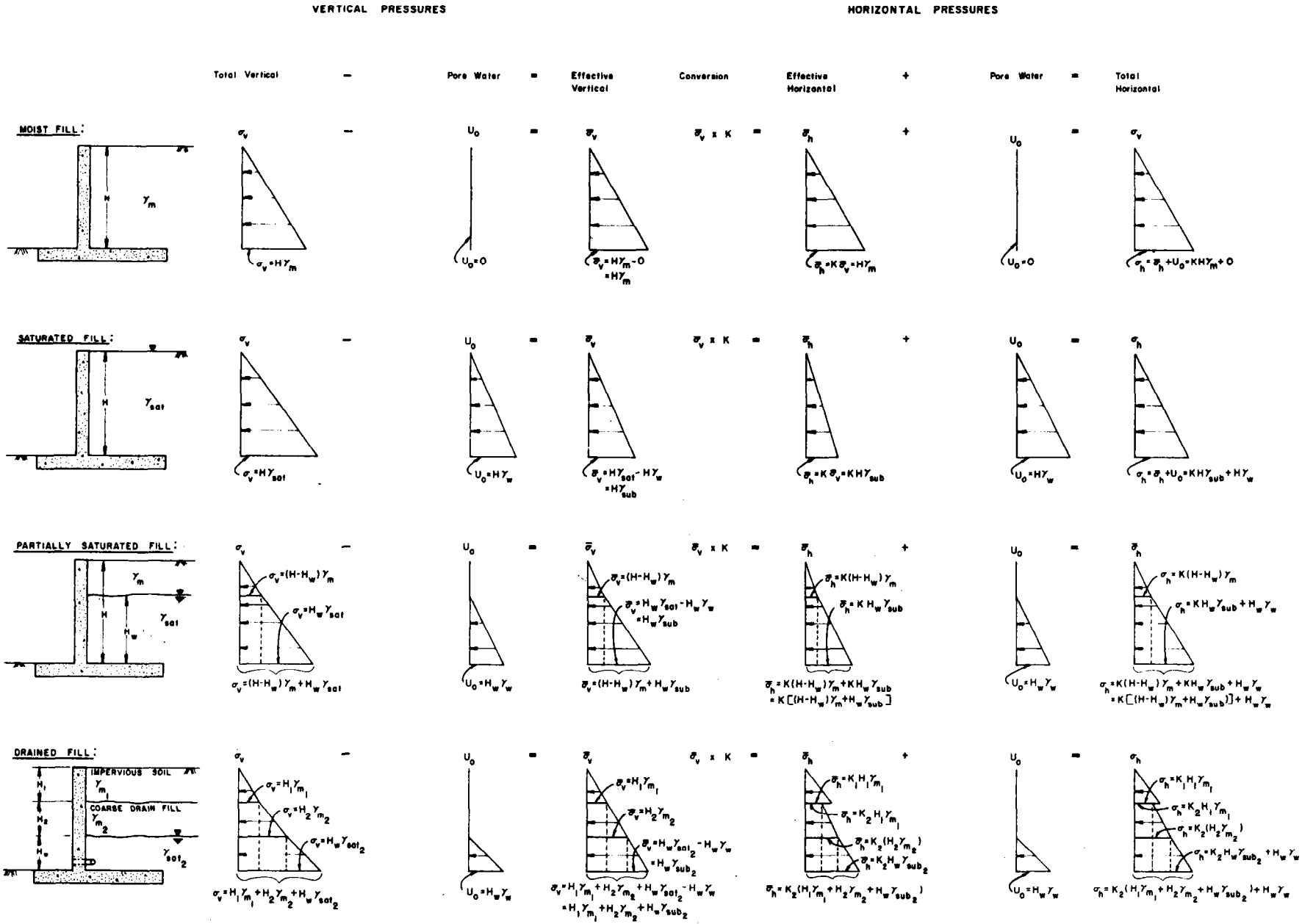

FIGURE 52

VI. GEOMETRIC AND DRAINAGE CONSIDERATIONS

Possibly the most basic of all assumptions made when designing earth retaining structures are those related to the materials which will load the wall. When assigning parameters to backfill or insitu materials there is an implied assumption that the assumed soil parameters prevail throughout the zone of failure (failure plane) as well as next to the structure itself. If this assumption is not assured, the entire analysis is in error. This is why the backfill material descriptions must include those materials within a prism defined by a 0.5:1 sloping line projecting upward from a point 2 feet out from the base of the wall to within 2 feet of the backfill surface. This is recommended in Figure 42 and graphically shown in Figure 53. This zone, in most instances, encompasses the probable zone of failure.

If there is a good reason to extend this zone, the designer is obligated to further evaluate the conditions and make to adjustments as necessary.

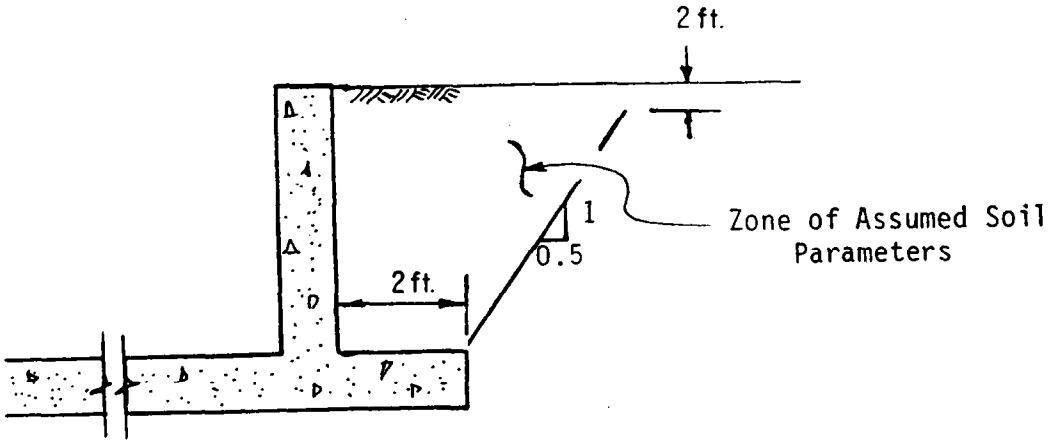

FIGURE 53 - BACKFILL ZONE OF PROBABLE FAILURE FROM DEFLECTION

In regards to drainage considerations, probably some of the most overlooked assumptions are the potential sources of water which may enter the backfill.[5/8/]

Potential sources of water which must be considered include:

1. Natural groundwater tables, springs, etc.
2. Seepage around the structure or changes in saturation due to operation of the structure.
3. Surface runoff directed toward the structure.
4. Irrigation practices near the structure site.
5. Effects of other structures on the groundwater regime in the area of the structure.

Drainfill zoning is the most common practice used in controlling hydrostatic pressures and seepage forces. For backfills that have moderate permeability rates (such as SM, ML) and seepage problems 2 and 5, a drainfill zone such as shown in Figure 54a is usually effective and relatively easy to construct. Heights in the order of 1/3H are usually necessary to effectively reduce hydrostatic and seepage pressures. Heights less than this may require an additional analysis of the hydrostatic forces. Zones such as shown in Figure 54b are recommended for fine, low permeability soils, and potential seepage problems such as 1, 4, and 5. This is usually quite effective in controlling seepage forces and/or to intercept groundwater flow, particularly from stratified soils. Vertical drain zones next to the wall are commonly employed for potential seepage problems such as 2 and 3, particularly where surface runoff and shrinkage of fine plastic soils may lead to

water infiltration through cracks near the wall. Frequently, it is desirable to take steps to minimize this type of infiltration, such as at the top of a drop structure headwall. Configurations such as shown in Figure 54c are sometimes used in this case.

In considering such problems, it is well to keep in mind the functional differences between bedding materials, filter materials, and drain materials. The following clarifications should assist:

Bedding: A material provided primarily to support a coarser material. Without it, the coarser material would sink into the base material because of inadequate bearing capacity. If seepage is expected up through the bedding, it must also then be designed as a filter for the base material. Frequently, the gradation of the bedding is also designed so it will not readily move up through the coarser material.

Drain: A material provided primarily to carry a given amount of seepage without developing hydrostatic pressure within its thickness, or hydrostatic heads next to a structure that cannot be tolerated. If a drain is placed against soil materials emitting seepage water, it must either meet the filter requirements of the base soil material or have a filter material between the base soil and the drain material.

Filter: A material provided to primarily filter finer soils so they will not move through it. In some cases, a filter can be made to be a drain, also, if its proportions and permeability are adequate to assure non-pressure flow as described for a drain.

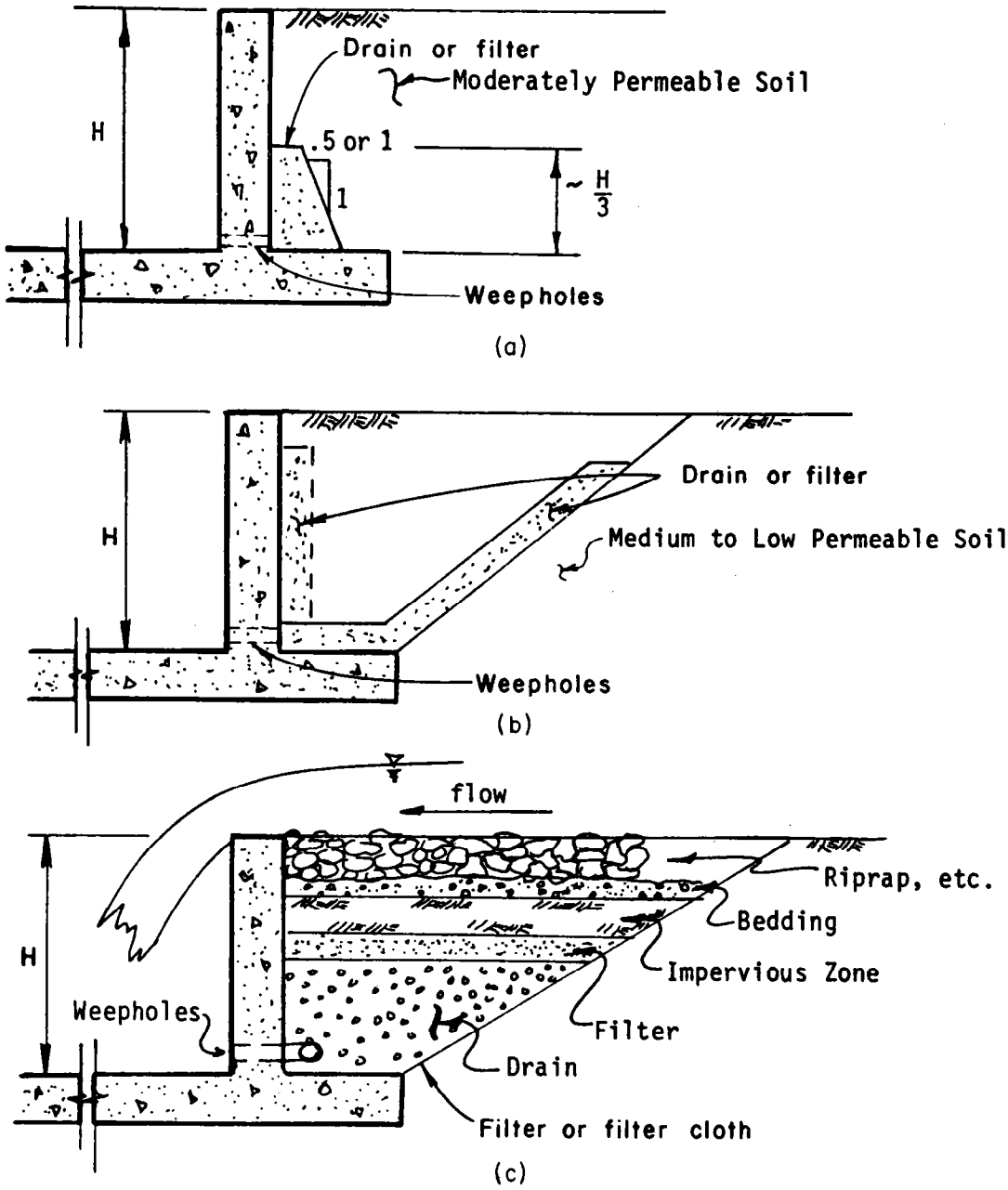

FIGURE 54 - METHODS OF DRAINING BACKFILLS

VII. INSITU MATERIALS

The effects of insitu materials normally do not become significant when appropriate backfill is placed within the prism defined in Figure 42. If this is not possible, an engineering geologist or qualified soils engineer should be consulted during early phases of design.

One problem area which has created excessive insitu pressures is where subtle inclined stratifications or seams are weaker than the sampled "average" soil and end up dictating the location and strength of the failure plane much differently than anticipated. This is graphically shown in Figure 55.

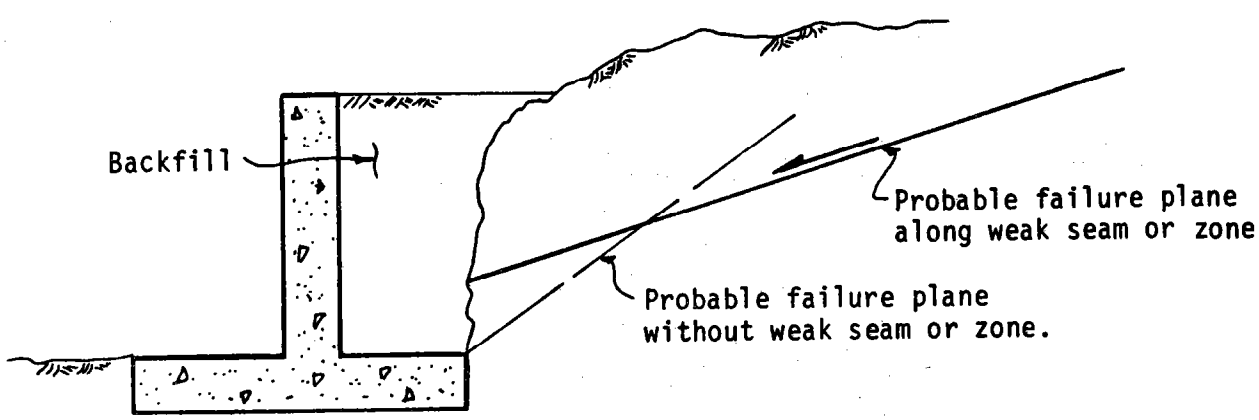

FIGURE 55 - POSSIBLE EFFECT OF WEAK INSITU ZONES

Another problem area which has created excessive insitu pressures is where the natural soils have been previously overconsolidated. This is graphically shown in Figure 56. The geologic stress history of the deposit must be analyzed in order to quantitatively design for this problem. In heavily overconsolidated soils, it is common to experience lateral pressures many times greater than the at-rest pressure of the same soil, had it been normally consolidated or remolded and compacted.

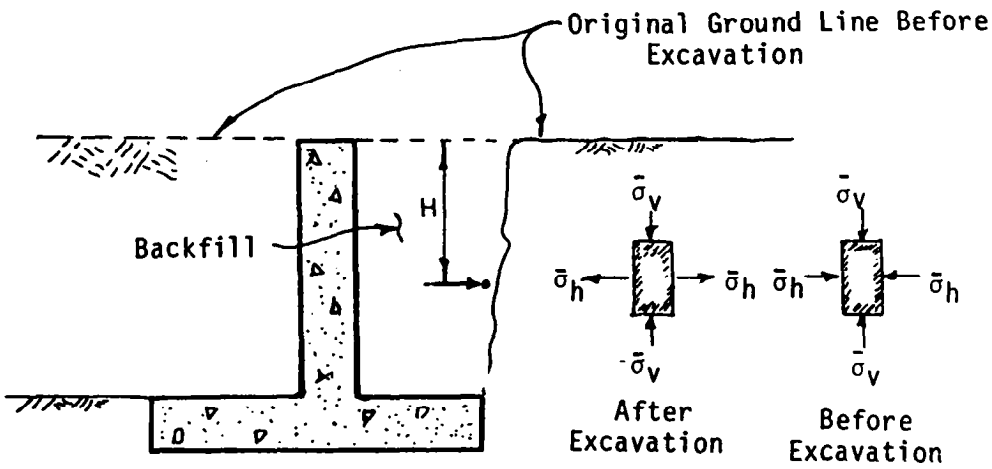

FIGURE 56 - POSSIBLE EFFECTS OF OVERCONSOLIDATED INSITU MATERIALS

VIII. EFFECTS OF FROST AND ICE LENSES

Where climatic conditions include freezing temperatures, there is a potential for frost and ice problems, which may lead to structural damage or permanent displacements.[5/] Obviously, this is also dependent on the type of soil in the backfill and the availability of water. Those soils which are considered most susceptible to these problems are silts (ML), fine silty sands (SM), silty gravels (GM), organic soils (OL, OH, Pt), and highly plastic clays (CH, CL).

The effects of freezing can lead to two categories of problems: (A) increased pressures, and (B) decreased stability. Following are two types of problems in each category.

A. Increased Pressures

1. Vertical ice lens development can occur adjacent to the earth side of a structural wall. This is a result of the cold surface of the concrete and the attraction of capillary water to ice lenses or infiltration of surface water into shrinkage cracks during freeze thaw cycles.

2. Perched groundwater and horizontal ice lens development can occur within the backfill when lower zones remain frozen and upper ones thaw during the freeze-thaw cycles. The potential for this occurrence is increased with low permeability backfill, a high groundwater table and surface inflow (local melting and drainage) onto the backfill.

B. Decreased Stability

1. If the surface of the backfill is exposed or in contact with a cold surface (concrete slab, etc.) there exists a potential for horizontal ice lens development near the surface, ice heaving, and subsequent loss of bearing strength upon thawing. This becomes particularly critical if a footing or slab is supported by the backfill.

2. Supporting soils beneath structural footings, especially retaining walls, may be very vulnerable to heaving (possibly subjecting a wall to passive earth pressures). They are also vulnerable to subsequent loss of bearing capacity upon thawing. Figure 57 shows that while a commonly used wall drain may be effective in keeping hydrostatic pressures from loading the wall directly, it may not prevent development of ice lenses.

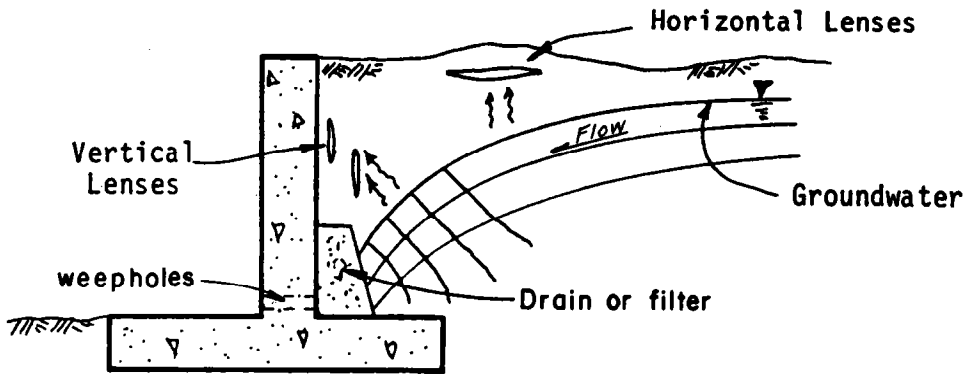

FIGURE 57 - ICE LENS DEVELOPMENT WITH A COMMONLY-USED DRAIN

Figure 58 shows one scheme that reduces hydrostatic pressure on a wall and minimizes the potential for ice lens development. This is often termed a "closed system."

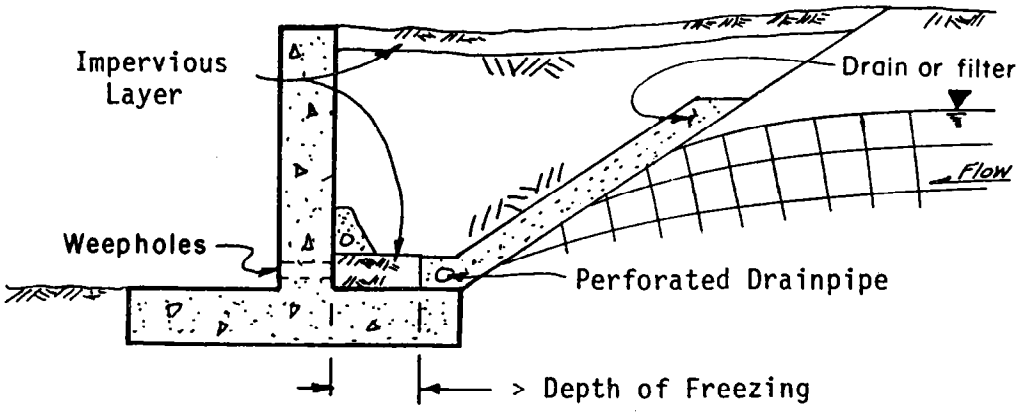

FIGURE 58 - CLOSED SYSTEM DRAINAGE IN FROST-HEAVE AREAS

IX. STRUCTURAL STABILITY CONCEPTS

A. Overturning

Retaining walls should have a minimum factor of safety of 1.5 against overturning; higher safety factors may be justified in some cases, depending on the uncertainties of the soils and site conditions.

The loads and footing reaction involved in this analysis for a moist soil backfill are graphically shown in Figure 59.

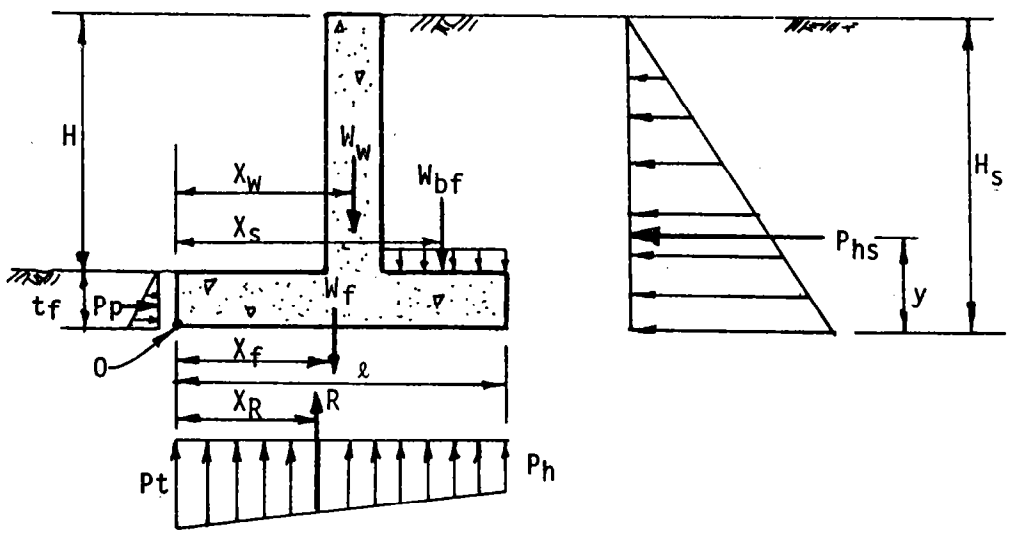

FIGURE 59 - LOADS AND FOOTING REACTION FOR OVERTURNING ANALYSIS

The forces, pressures and dimensions in Figure 59 are:

P_{hs} = Total lateral earth pressure force as appropriate for type of wall movement and backfill materials for sliding analysis, lbs

W_{bf} = Weight of moist soil above heel, lbs

W_w = Weight of wall, lbs

W_f = Weight of footing, lbs

R = Resultant Vertical Reaction, lbs

H = Height of wall above footing, ft

H_s = $H + t_f$

Pp = Passive earth pressure force at toe of footing (frequently neglected in design because of potential erosion, etc., along toe), lbs

x = Distance from point 0 to respective forces (X_w, X_s, X_f, X_R), ft

y = Distance above point 0 to resultant force of P_{hs}, ft

ϕ_f = Coefficient of friction between heel and soil, degrees

C = Cohesion of soil, lbs/ft^2

t_f = Thickness of footing, ft

The proportions of the footing must be such that there are positive contact pressures across the footing (P_t and P_h positive) and the net reaction R falls within the middle third of the footing. Generally speaking, a footing width of about 0.4 to 0.6 times the height can be used for the preliminary analysis. Figure 50 can be used to obtain a trial footing length.

Two conditions are assumed for stability computations; they are: (1) the summation of vertical forces equal zero, $\Sigma F_v = 0$, and (2) the summation of moments about point 0 equal zero, $\Sigma M_o = 0$.

Two simultaneous equations can be written, one for each condition of stability, in order to solve for the two unknowns, P_t and P_h.

These are:

1. $\Sigma F_v = 0$

$$W_w + W_{bf} + W_f = (P_h)(\ell) + 1/2\ (P_t - P_h)(\ell) = R \qquad \text{(Equation 1)}$$

2. $\Sigma M_o = 0$ (counterclockwise assumed positive)

$$0 = (P_h)\ (\tfrac{\ell}{2}) + 1/2\ (P_t - P_h)(\ell)(\tfrac{\ell}{3}) + P_{hs}\ (y) - W_{bf}(X_s) - W_w(X_w) - W_f(X_f) - p_p\ (t_{f/3}). \qquad \text{(Equation 2)}$$

P_h and P_t are solved by substitution.

The location of the resultant R can be determined by $\Sigma M_o = 0$ in the reaction diagram and solving for X_R.

3. $\Sigma M_o = 0$ of reaction diagram

$$0 = P_h\ (\ell)\ (\tfrac{\ell}{2}) + 1/2\ (P_t - P_h)\ (\ell)\ (\tfrac{\ell}{3}) - R\ (X_R)$$

4. Solving for X_R:

$$X_R = \frac{\ell^2(2P_h + P_t)}{6R}$$

The safety factor against overturning is simply the ratio of resisting moments to the overturning moment or:

$$F_s = \frac{\Sigma M \text{ resisting}}{\Sigma M \text{ overturning}} \geq 1.5$$

or, in reference to Figure 59,

$$F_s = \frac{W_{bf}(X_s) + W_w(X_w) + W_f(W_f)}{P_{hs}(Y)} \geq 1.5$$

Note that the reaction pressures P_h and P_t are not involved in the factor of safety computations. If surcharge or hydrostatic uplift effects are involved, they must be considered accordingly.

B. Sliding

The loads and footing reaction pressures involved in this analysis are essentially the same as for overturning as shown in Figure 59.

Retaining walls should have a minimum factor of safety against sliding of 1.5. Because of the long term life normally associated with water control structures, cohesion is usually neglected in the resistance to sliding. If, for shorter life structures, it is deemed justified to use cohesion as a resistance to sliding, a minimum factor of safety of 2 should be used:

$$FS = \frac{\text{Resisting Forces}}{\text{Driving Forces}} \geq 1.5 \text{ or } 2 \text{ (or refer to Figure 38)}$$

$$FS = \frac{R\tan\phi_f + C\ell}{P_{hs}} \geq 1.5 \text{ or } 2$$

As with overturning, the effects of surcharge or hydrostatic uplift must also be considered in sliding analysis, as appropriate.

C. Bearing Capacity and Settlement

1. Bearing Capacity: Once the overturning analysis is made and the structure is determined stable from overturning and sliding, a check should be made of the maximum pressure, P_t, versus the allowable bearing capacity of the supporting soil, q_a.

The minimum factor of safety against failure in bearing capacity should not be less than 3.

$$FS = \frac{q_a}{P_t} \geq 3$$

Allowable bearing capacity determinations are beyond the scope of this paper. Articles 33 and 53 of "Soil Mechanics in Engineering Practice," by Terzaghi and Peck[5/], are recommended for this.

2. Settlement: Settlement is purposely distinguished from bearing capacity analysis because it is a totally different mechanism and problem, and very often overlooked in design. Two settlement considerations may be necessary for a retaining structure:

a. Amount of settlement.

b. Location of settlement and effect on wall rotation and subsequent pressures.

If the structure or backfill is supporting anything that has limited tolerances for settlement or rotation, these tolerances should be identified. The amounts of settlement and rotation should then be estimated and compared to the acceptable values.

To check the settlement profile and possible rotation effects on the structure, an imaginary plane along the base of the footing should be extended horizontally out under the backfill (see Figure 60). The pressure diagrams of the footing reaction (P_h and P_t) and the pressure diagram caused by the backfill load, P_{bf}, along the same plane are superimposed. If the pressure of the backfill P_{bf} or P_h are greater than P_t, (P_{bf} or $P_h > P_t$), rotation of the wall toward the fill is likely. In this case, passive earth pressures for the design of the wall stem will likely develop and should be used.

The amount of settlement can be determined using standard procedures in several soil mechanics texts; Articles 13, 14, and 39 through 41, of "Soil Mechanics in Engineering Practice" by Terzaghi and Peck[5/], are recommended. Consultation with a qualified soils engineer is suggested if the user is not familiar with differential footing settlement analysis.

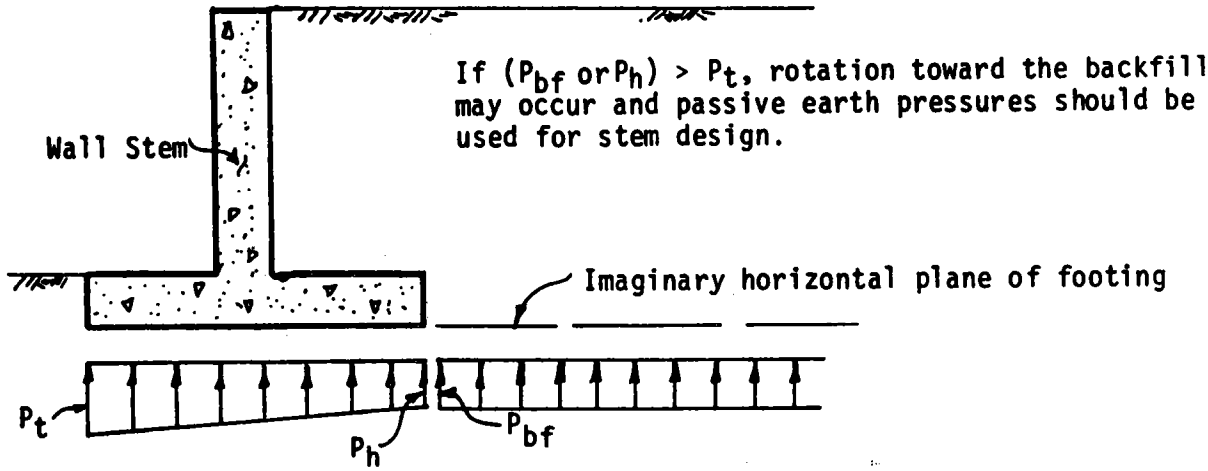

FIGURE 60 - ROTATION INTO BACKFILL DUE TO DIFFERENTIAL FOUNDATION SETTLEMENT

D. Mass Movements

Considerable care must be exercised when installing retaining structures on naturally sloping surfaces. In most cases, earth is either removed on the downslope side or added on the upslope side, or both. These operations, in most instances, decrease the overall mass stability of the slope. Potential failure planes may circumvent the entire structure and not be involved in the detailed stability analysis of the structure itself, unless the designer is suspect of a potential mass movement and checks for it.

If there is reason to suspect this potential, an engineering geologist or soils engineer should be consulted as early as possible in the preliminary design phase.

Two mechanisms which can lead to mass instability as a result of retaining wall installations are shown in Figures 61 and 62. In Figure 61 a retaining wall has been added to level the downslope area of a fairly gentle slope. The structure extends below the natural water table. A nominal drain has been included to reduce hydrostatic pressure on the wall. In this case, unless the drain and the weep holes through the wall have a combined capacity greater than the quantity of groundwater flow coming toward the wall, seepage and uplift pressures will build up around and beneath the structure. In this setting, there is an increased potential for overturning and sliding of the structure and for piping in the leveled area.

A piping potential in the leveled area may still exist, even if the drain behind the structure has adequate capacity for the groundwater flow. This potential should be checked with a flow net analysis to identify critical exit seepage gradients.

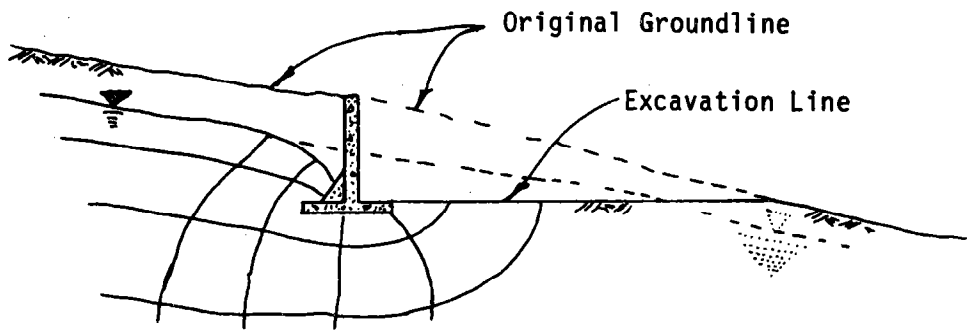

FIGURE 61 - POSSIBLE INSTABILITY DUE TO EXCAVATION BEYOND TOE OF STRUCTURE

(210-VI, TR-74, July 1989)

In Figure 62 a retaining structure has been added to level the downslope and upslope area of a fairly steep slope. As shown in Figure 62, the driving forces and resisting forces on a potential sliding surface have been seriously altered.

In this case the new normal forces, N_1, in the fill area, are increased. This increases the frictional resistance ($N_1 \tan \phi$) but not enough to offset the effects of the increased driving force, R_1, and the loss of frictional resistance ($N_2 \tan \phi$) and resistance (R_2) in the cut area.

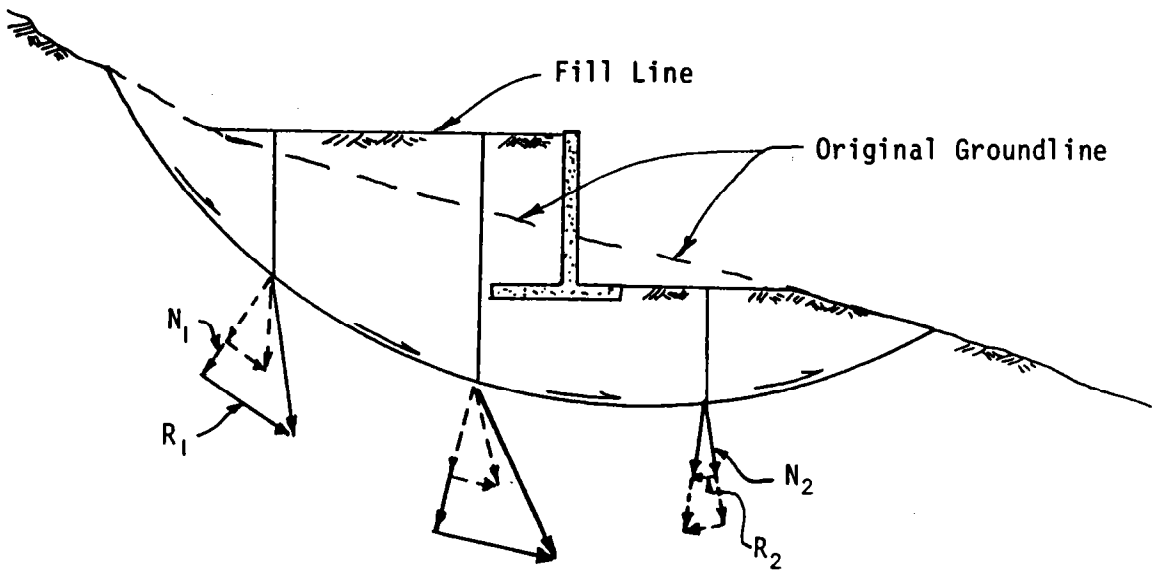

FIGURE 62 - ROTATIONAL SLOPE INSTABILITY DUE TO EXCAVATION AND BACKFILL

E. Anchors and Anchor Blocks

The required safety factor for anchors and anchor or thrust blocks is highly dependent on the reliability of the load assumption, soils data, method of analysis, use of the structure, and consequences of failure.

For most SCS structures, with reasonably good data, a safety factor in the order of 2 to 3 is adequate. If failure of an anchor could cause loss of life or serious damage, detailed site specific data is needed or a significant increase in the safety factor is justified; e.g., cable anchors for a cable suspension crossing for people.

The earth pressures and allowable anchor pull for a wall extending from the ground surface downward are shown in Figure 63 5/8/ (see also Section IV).

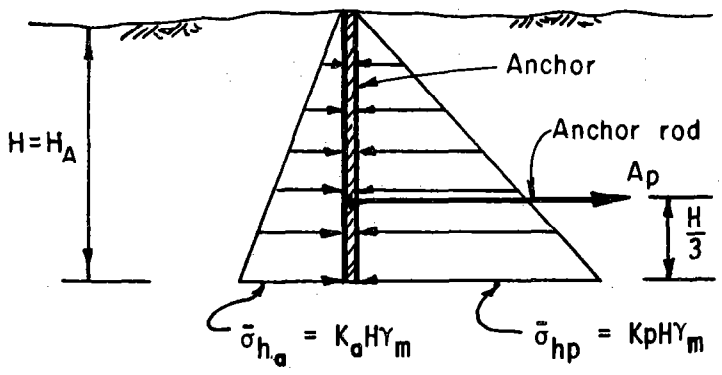

FIGURE 63 - EARTH PRESSURES ACTING ON AN ANCHOR EXTENDING FROM GROUND SURFACE DOWNWARD

The allowable anchor pull, A_p, is the difference between the active pressure on the anchor and the passive resistance offered by the soil, adjusted by the desired factor of safety.

Passive Resistance, Pp

$$P_p = 1/2(KpH\gamma m)(H) = 1/2K_pH^2\gamma m$$

Active Pressures

$$P_a = 1/2(K_aH\gamma m)(H) = 1/2K_aH^2\gamma m$$

Anchor Pull

$$A_p = \frac{Pp - Pa}{F_s} = \frac{1/2KpH^2\gamma m - 1/2KaH^2\gamma m}{F_s}$$

$$A_p = \frac{H^2\gamma m(Kp - Ka)}{2F_s}$$

This approach is also approximately valid for buried anchors so long as the anchor is not buried deeper than twice its height. For deeper anchors, a bearing capacity analysis should be made assuming a footing depth at mid-height of the anchor below the ground surface. Articles 33, 53, and 54 of "Soil Mechanics in Engineering Practice" by Terzaghi and Peck is recommended for this analysis.

X. DESIGN PROCEDURES, USE OF DESIGN AIDS, AND EXAMPLE PROBLEMS

A. Clean, Coarse Sand and Gravel Backfill (less than 5% fines and $\bar{\phi} > 27$:

EXAMPLE A.1: Wall Yielding Away from Fill ($t/H < 0.085$):

Given: A 12-foot high wall is desired. Backfill will be a mixture of clean angular sands and gravels compacted to 80% relative density of about 110 lb/ft^3. Backfill is level at the top of the wall. ϕ at this density is estimated at about 34°.

The footing will be sitting on similar material in a very dense state, no natural water table is present. A 10-inch wall thickness is the minimum desired thickness for two mats of reinforcing steel.

Determine:

a. The lateral earth pressures for stem design and stability analysis.

b. Check the stability for overturning and sliding.

Procedure:

a. Check type of wall deflection (Figure 42):

$$t/H = \frac{10/12}{12} = 0.069 < 0.085$$

$\therefore$ wall is considered yielding - and the active earth pressure coefficients from Figure 43 can be used.

b. using Figure 43 and $\bar{\phi} = 34^o$ find $K_a = 0.28$.

c. The active lateral earth pressure for the stem design at the base of the wall is $\sigma h_a = K_a H \gamma_m = (0.28)(12)(110) = 369.6$ lb/ft^2. For stability design it is $\sigma_h = (0.28)(12.83)(110) = 395.2$ lb/ft^2.

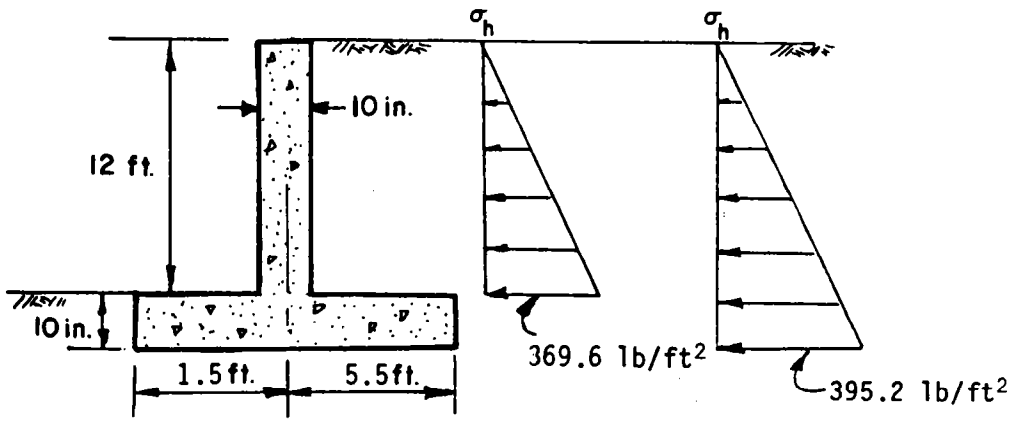

d. Using Figure 50 estimate the footing length. For a height of 12 feet and K = 0.28, find $\ell \approx$ 6.5 feet (use 7 feet; 1.5-foot toe, 5.5-foot heel). Assume a footing thickness of 10 inches.

e. Check sliding and overturning:

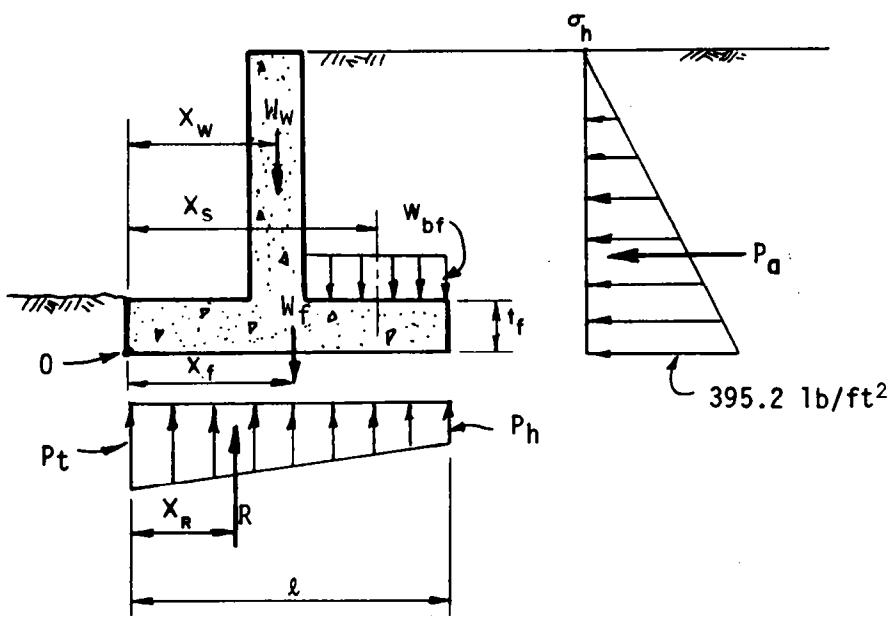

(1) <u>sliding</u>:

Driving force, $P_a = 1/2(395.2)(12.83) = 2535.2$ lbs

Resisting force: $W_{bf} = (12)(5.5 - \frac{0.83}{2})(110) = 6712.2$

$W_f = (7)(0.83)(150) = 871.5$
$W_w = (12)(0.83)(150) = 1494.0$
Total Weight = 9077.7 lbs.

Neglecting Passive Resistance at Toe:

resistance = $(9077.7)(\tan\phi_f)$

$= (9077.7)(0.5) = 4538.8$ lbs.

($\tan\phi_f$ taken from Figure 51)

$\therefore$Factor of safety against sliding = $F_s = \frac{4538.8}{2535.2} = 1.8$.

(2) <u>overturning</u>: Solve for P_t, P_h, R, location of R, and Safety Factor. Write simultaneous equations for $\Sigma F_v = 0$ and $\Sigma M_o = 0$, and solve for P_h and P_t.

<u>$\Sigma F_v = 0$</u>:

$$W_w + W_f + W_{bf} = P_h(\ell) = 1/2\ (P_t - P_h)(\ell) = R$$

$$(1494) + (871.5) + (6712.2) = P_h(7) + (P_t - P_h)(3.5)$$

$$9077.7 = 3.5\ (P_t + P_h)$$

$$2593.6 = P_t + P_h. \qquad \text{(Equation 1)}$$

<u>$\Sigma M_o = 0$</u>:

$$(P_h)(\ell)(\tfrac{\ell}{2}) + 1/2(P_t - P_h)(\ell)(\tfrac{\ell}{3}) + (2535.2)(\tfrac{12.83}{3})$$

$$- W_{bf}(X_s) - W_w(X_w) - W_f(X_f) = 0$$

$$P_h(7)(\tfrac{7}{2}) + 1/2(P_t - P_h)(7)(\tfrac{7}{3}) + 2535.2(\tfrac{12.83}{3})$$

$$- (6712.2)(1.5 + \frac{0.83}{2} + \frac{5.5 - \frac{0.83}{2}}{2}) - (1494)(1.5) - (871.5)(\tfrac{7}{2}) = 0$$

This resolves to:

$$24.5\ P_h + 8.16(P_t - P_h) = 24{,}375 \text{ or } P_t = 2987.2 - 2P_h. \quad \text{(Equation 2)}$$

Substitute equation 2 into equation 1:

$$2593.6 = (2987.2 - 2P_h) + P_h$$

$$P_h = 2987.2 - 2593.6 = \underline{393.6\ \text{lb/ft}^2}.$$

Using equation 1 and $P_h = 393.6$:

$$2593.6 = P_t + 393.6$$

$$\underline{P_t = 2200\ \text{lb/ft}^2}.$$

Solving for R:

$$R = \Sigma F_v = W_w + W_f + W_{bf} = 9077.7 \text{ lbs.}$$

Solving for location of R:

$\Sigma M_o = 0$:

$$0 = P_h\ (\ell)(\tfrac{\ell}{2}) + 1/2(P_t - P_h)(\ell)(\tfrac{\ell}{3}) - R(X_R)$$

$$X_R = \frac{\ell^2(2P_h + P_t)}{6R} = \frac{(7)^2\ 2(393.6) + (2200)}{6(9077.7)} = 2.69 \text{ ft from O.}$$

This is just within center 1/3 of footing.

Check the overturning factor of safety:

$$F_s = \frac{W_{bf}(X_s) + W_w(X_w) + W_f(X_f)}{P_a(\frac{H + t_f}{3})}$$

$$F_s = \frac{(6712.2)(1.5 + \frac{0.83}{2} + \frac{5.5 - \frac{0.83}{2}}{2}) + (1494)(1.5) + 871.5\ (\frac{7}{2})}{(2535.2)(\frac{12.83}{3})}$$

$$F_s = \underline{3.25\ \ \text{OK}}.$$

EXAMPLE A.2: Non-Yielding Wall (t/H > 0.085 or otherwise restrained):

Given: Headwall for a drop structure is 12 feet high and 10 inches thick. The top of the wall is restrained by a reinforced concrete catwalk which supports a gate stem that should not be allowed to deflect. Backfill will be a mixture of clean angular sands and gravels compacted to 110 lb/ft^3. Backfill is level, $\bar{\phi}$ is 34°. The top of the backfill has a thin impervious clay blanket to minimize seepage into the backfill; weep holes and drain pipes have been installed to relieve all hydrostatic pressures. Since this is for flood control and there is no natural water table, a saturated condition will not likely develop (short duration flow).

Determine: The at-rest lateral earth pressures for structural design and stability that are caused by the restraint of the catwalk.

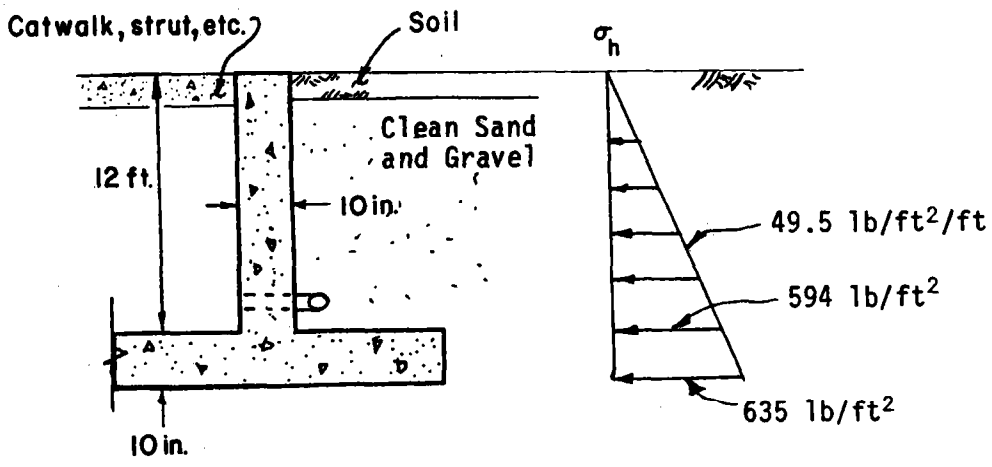

Procedure: Assume that the effects of the 1-foot impervious zone are negligible and that the gravels essentially extend to the top of the wall (probably OK since the wall is fairly high compared to the thin 1-foot clay zone).

At-Rest Lateral Earth Pressure for Structural Design:

Figure 42 recommends the use of $K_o = 1 \sin \phi$ from Figure 44 in the equation:

$\sigma_{ho} = K_o \gamma_m H$,

where: $K_o = 0.45$ from Figure 44.

σ_{ho} = for Structural Design:

$\sigma_{ho} = (0.45)(110)(12) = 594 \text{ lb/ft}^2$.

Note that this compares to $\sigma_{ha} = 395 \text{ lb/ft}^2$ for a wall of the same height and backfill but in the yielding active condition - see example A.1.

σ_{ho} for Stability Analysis:

$\sigma_{ho} = (0.45)(110)(12.83) = 635 \text{ lb/ft}^2$

The linear load diagram changes at the rate of $\frac{635}{12.83} = 49.5 \text{ lb/ft}^2$ per foot depth. The structural designer should be aware that the load distribution is not necessarily triangular. A parabolic distribution having the same total lateral force with the resultant near mid-height should also be considered possible when developing the shear and bending moment diagrams.

EXAMPLE A.3.: Wall Yielding Toward Fill:

Given: A 12-foot high wall is to be placed on a normally consolidated clay foundation with new backfill consisting of clean angular sands and gravels compacted to 110 lb/ft^3. $\bar{\phi}$ for the backfill material is about 34°. A water table does not exist; weep holes and the coarse fill will prevent hydrostatic pressures. It is not economical to replace the clay to get a better foundation.

Determine: The probable earth pressures for structural design and stability.

Since the clay is normally consolidated and a new load of (12)(110) = 1329 lb/ft^2 will be added onto the heel it is likely that some rotation of the structure into the fill may occur. Since this will be critical from the standpoint of structural loading, assume that full lateral passive pressures may develop.

From Figure 42, we find that the passive lateral earth pressure coefficients from Figure 45 should be used in the equation:

$$\sigma_p = K_p \gamma m H,$$

Where:

$K_p \approx 3.3$ (from Figure 45)

and:

$$\sigma h_p = 3.3\ (110)(12) = 4356\ \text{lb/ft}^2.$$

If the load can be assumed to be linear, the load will increase at the rate of $\frac{4356}{12} = 363$ lb/ft^2 per foot of depth.

This analysis represents the extreme load condition for tension-producing moments on the backfill side of the wall and the top face of the heel within the backfill. If this is thought to be too conservative, a consolidation test and settlement analysis of the footing foundation can be made and translated into percent rotation of the top of the wall. If this percent is in the order of 3 to 5%, or more, the use of the full passive pressures are confirmed and recommended.

In the event the clay foundation settles uniformly and does not rotate the wall into the fill, critical pressures P_t and P_h on the footing may develop and should be checked.

To address this possibility, active pressures, $\sigma_a = K_a \gamma_m H$, should be checked to determine maximum probable values of P_t and P_h. (Example A.1. has done this for the same backfill and wall height; P_t = 2200 lb/ft^2 and P_h = 393.6 lb/ft^2.)

These values should then be checked against the allowable bearing capacity, qa, of the clay foundation. This may dictate a larger footing than that required for sliding or overturning.

EXAMPLE A.4.: Anchors and Anchor Blocks:

Given: A 30-inch pipe has a sharp bend that causes a change in momentum thrust of 16,000 lbs. A reinforced concrete thrust block is required to prevent pipe over-stress and pulling at the joints. The soil in the area is a clean sand; $\bar{\phi} \approx 30^{o}$ and the in-place density is $\gamma_m = 100$ lb/ft^3.

It is desirable to encompass the pipe in the block, therefore, a 4-foot block height will be used. The bottom of the block will be set at 6 feet below the ground surface.

Determine: The earth pressures on the block and the required length of block perpendicular to the direction of thrust.

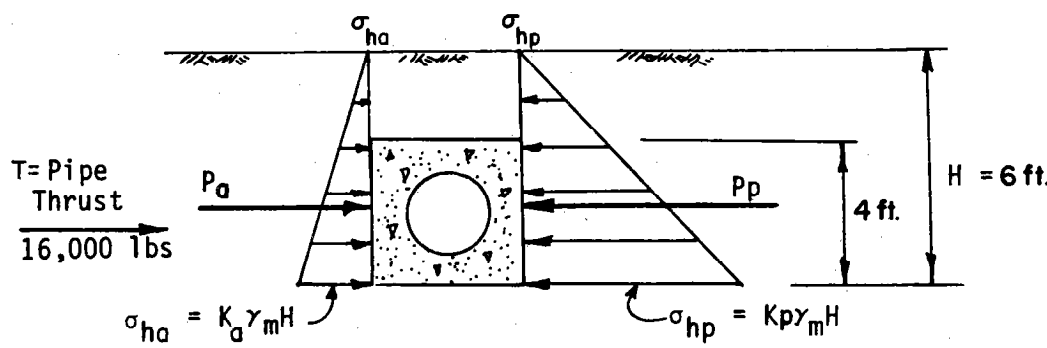

Procedure: In accordance with Section IV.D.5., (FIG 40 and 41) full active and passive pressures can be assumed if the anchor is not deeper than twice its height.

$\therefore$ 6 < 2x4 = 8 $\therefore$ OK.

A summation of the horizontal forces is $T + P_a = P_p$ where T is the thrust and P_a and P_p are the respective available active and passive soil pressures.

Check P_a:

According to Figure 42, K_a can be determined from Figure 43. Using Figure 43 and $\bar{\phi} = 30^o$, find $K_a = 0.36$ (level backfill) and the active pressure:

$$\therefore \sigma_{ha} = (0.36)(100)(6) = 216 \text{ lb/ft}^2 \text{ and } P_a = 1/2(216)(6) = 648 \text{ lbs.}$$

Check P_p:

According to Figure 42, K_p can be determined from Figure 45. Using Figure 45 and $\bar{\phi} = 30^o$, find $K_p = 2.9$ and the maximum available passive pressure:

$$\sigma_{hp} = (2.9)(100)(6) = 1740 \text{ lb/ft}^2 \text{ and } P_p = 1/2(1740)(6) = 5220 \text{ lbs.}$$

The maximum net passive earth pressure available to resist thrust after correcting for the existing active earth pressures is $P_p - P_a = 5220 - 648 = 4572$ lbs.

The minimum required length of anchor block is then:

$$\text{minimum length} = \frac{T}{P_p - P_a} = \frac{16,000}{4572} = 3.5' \ (F_s = 1).$$

If a safety factor of 2 is acceptable, a length of 7 feet should probably be used.

B. Other Mineral Soils (more than 5% fines or $\bar{\phi}$ <27):

EXAMPLE B.1.: Wall Yielding Away From Fill (t/H < 0.085):

Given: A 10-foot high wall is desired with a thickness of about 8 inches. It is not restrained in any way. The backfill will be mostly SM soils. There is some plasticity but very few samples indicate SC-type of material. The fines are greater than 5%, and the backfill will be level. The backfill will also have drain fill and weep holes to prevent saturation. Assume a 10-inch thick heel also.

Determine: The earth pressures for structural design and stability analysis.

Procedure: Check yielding condition: $t/H = \frac{8/12}{10} = 0.067 < 0.085$.

Therefore the wall is considered yielding.

Figure 42 indicates that for this condition and more than 5% fines, figure 46 and the equivalent fluid pressure method can be used.

In Figure 46, soil-type 3 most nearly represents the type of backfill being used. Entering the set of curves for soil-type 3 and $H_1/H = 0$ (level backfill) find $EFP_h = 46$ lb/ft^2 per foot and $EFP_v = 0$.

The pressure diagram can be assumed to be triangular with a total pressure of $\sigma_h = (46)(10) = 460$ lb/ft^2 at the base of the wall for structural design and $\sigma_h = (46)(10.83) = 498$ lb/ft^2 at the base of the footing for stability design.

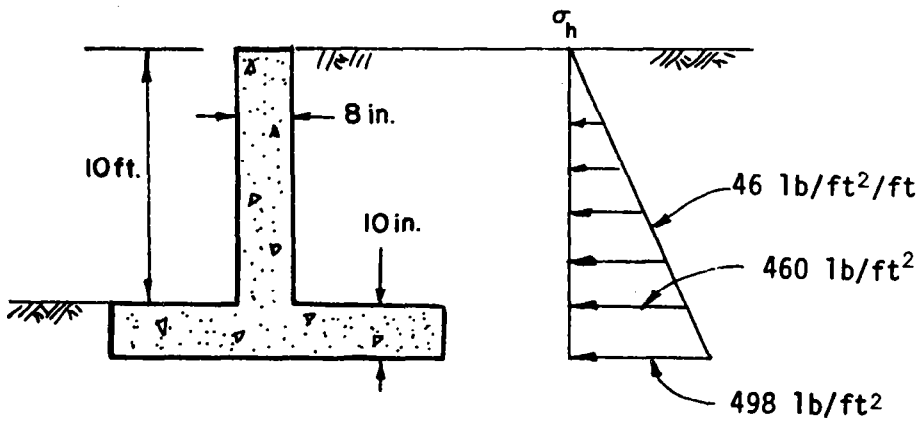

EXAMPLE B.2.: Non-Yielding Wall (t/H > 0.085 or otherwise restrained):

Given: A 10-foot high wall is desired. It is also desired to have it non-yielding because of its visibility and the critical alignment of pumps and screens that will be mounted on the top of the wall. Anchors or buttresses cannot be readily used at this site.

The backfill will be mostly SM soils, with some SC's also; $\bar{\phi} = 30^o$ and $\phi = 20^o$. The backfill will be level with the top of wall and has considerable drainage and weep holes. Moist unit weight will be about 100 lb/ft^3.

Determine: The wall proportions and the earth pressures for structural and stability design.

Procedure: Since it is desired to have the wall non-yielding, determine the approximate minimum wall thickness that will assure this condition for the structural designers (within about 1% deflection at the top of the wall).

$t/H \geq 0.085$; $\therefore$ $t \geq (0.085)(H)$.

$t \geq (0.085)(10)(12) = 10.2"$, Use 11" minimum.

Assume a slightly thicker footing, say 12 inches.

For the desired non-yielding condition and the type of backfill described, Figure 42 recommends using the K = at-rest curve shown on Figure 44.

Since the fill will be well drained by a drain and weep hole and the fill will not become saturated, $\bar{\phi}$ rather than ϕ may be used.

Using the K = at-rest curve and $\bar{\phi} = 30^{\circ}$ in Figure 44, find $K_o = 0.6$.

Note: If the fill was not well drained and saturation was possible, a value $K_o = 0.75$ would be appropriate (for $\phi = 20^{\circ}$) since the operation of screens, pumps, etc., can cause dynamic loads and there is also a likelihood of other temporary surcharges in this area (equipment, materials, etc.)

The pressure at the base of the wall will be $\sigma_h = (0.6)(100)(10) = 600$ lb/ft^2 for structural design, and $\sigma_{ho} = (0.6)(100)(11) = 660$ lb/ft^2 at the base of the footing for stability analysis.

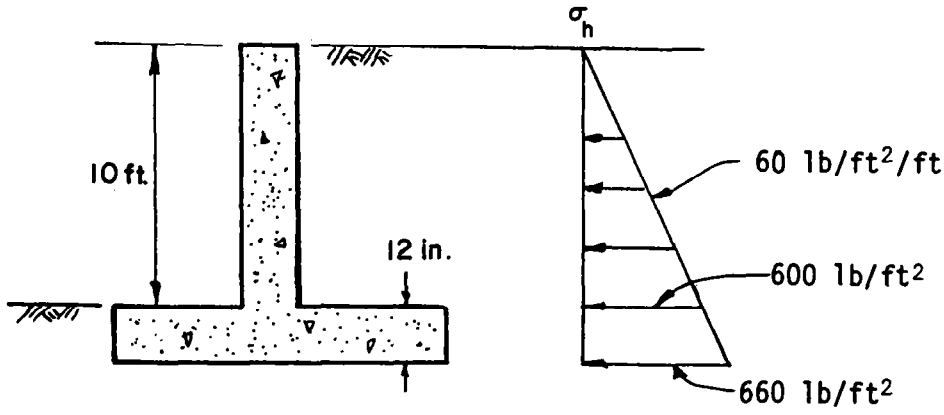

EXAMPLE B.3.: Wall Yielding Toward Fill:

If a wall (or anchor) is to be installed, and indications are that the wall could possibly yield into the backfill (EG - example problem A.3.), backfill materials containing more than 5% fines are not recommended.

If the problem is one of evaluating an existing wall that is already backfilled with this type of soil and it is deflecting in this mode, the following procedure can be used to check its structural capacity and potential for failure:

Given: A 15-foot high wall has been backfilled to the top with a fine silty clay. The backfill is level and the wall and footing have both rotated such that the wall is pressing into the backfill. The wall has considerable drainage and there are no probable sources of water that will develop hydrostatic pressure. $\bar{\phi}$ is estimated at 20° and the moist unit weight is about 100 lb/ft^3.

Determine: The lateral earth pressures that should be used in evaluating the wall's existing structural capacity.

In this case, the dashed portion of Figure 45 (below the $\bar{\phi} = 27^{o}$ line) can be used.

Using $\bar{\phi} = 20^{o}$ in Figure 45, find $K_p = 2.0$. The earth pressure at the base of the wall could be as high as $\sigma_p = K_p \gamma_m H = (2)(100)(15) = 3000$ lb/ft^2. If the deflection at the top of the wall is in the order of 3 to 5% the maximum possible passive pressures probably are present.

C. Organic Soils ($\frac{LL_{OD}}{LL_{AD}} < 0.7$) and High Shrink Swell Soils (LL > 50):

The use of these soils is not recommended for backfill. Also, analysis of existing walls under these conditions is not readily available with the currently available techniques and state of the art. Therefore, no examples are given.

D. Effects of Saturation:

EXAMPLE D.1.: Hydrostatic pressures:

Given: A 12-foot high box inlet structure. The backfill materials are clean sands, $\bar{\phi} = 30^{o}$ and $\phi = 18^{o}$ when compacted to $\gamma_m = 110$ lb/ft^3 at an optimum moisture of 15%. The fill will be saturated to within 4 feet of the top by the permanent pool level. Several weep holes and drains control the hydrostatic pressure in the fill to a maximum depth of about 8 feet above the base. Lower drainage of the backfill is not desirable due to critical water losses.

Determine: The lateral earth pressures for design.

Procedure: Since part of the soil will be saturated, it will be necessary to determine the saturated unit weight of soil. In doing this, the following equations will be employed:

$$\gamma d = \frac{\gamma m}{1+w}, \quad Gw = Se, \text{ and } e = \frac{Gw}{\gamma d} - 1.$$

Where: e = void ratio w = moisture content $w = 62.4\ lb/ft^3$

G = specific gravity γ_d = dry unit weight

S = saturation γ_m = moist unit weight

Caluclate: $\gamma_d = \frac{110}{1 + 0.15} = 95.6\ lb/ft^3$

Assuming G = 2.7, calculate: $e = \frac{(2.7)(62.4)}{95.6} - 1 = 0.76.$

Assuming 100% saturation below the water table, calculate w when the soil is saturated:

$$w = \frac{Se}{G} = \frac{(1)(0.76)}{2.7} = 0.28 \text{ or } 28\%.$$

The saturated unit weight is then $\gamma_{sat} = \gamma_d(1 + w) = (95.6)(1 + 0.28) = 122.4\ lb/ft^3$ and the buoyant unit weight is $\gamma_{sub} = \gamma_{sat} - \gamma w = (122.4 - 62.4) = 60\ lb/ft^3$.

Figure 42 indicates that for a structure that is "otherwise restrained" the $K_o = 1-\sin\bar{\phi}$ of Figure 44 should be used for clean soils.

$\bar{\phi}$ can probably be used here since the soil is free-draining and it is unlikely that a rapidly applied surcharge can occur.

Using Figure 44, $\bar{\phi} = 30^o$, and the $K_o = 1-\sin\bar{\phi}$ curve find $K_o = 0.5$.

The procedure can best be explained by referring to the sketch while reviewing the following computations to develop the earth pressure diagrams.

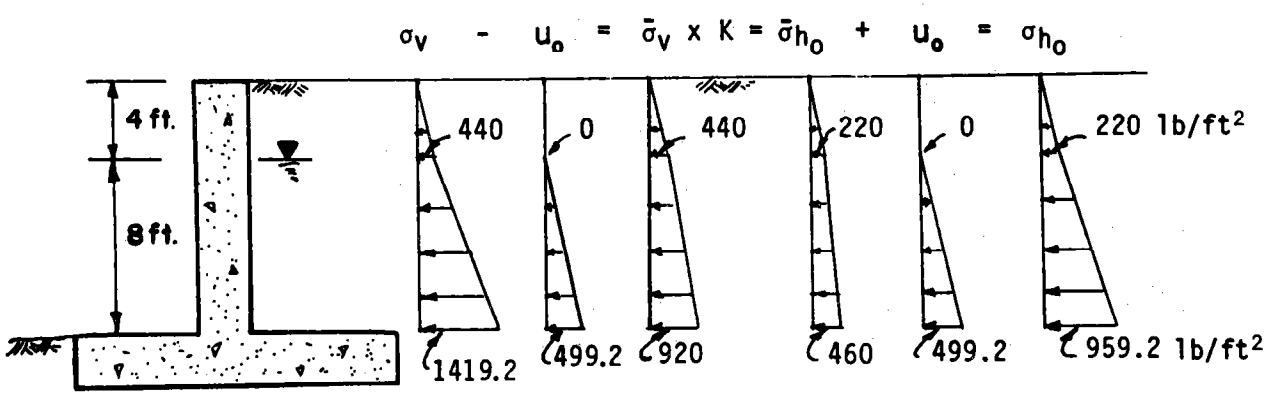

σv, total vertical pressures:

@ 4' depth:

$\sigma_v = H\gamma_m = (4)(110) = 440\ lb/ft^2.$

@ 12' depth:

$\sigma_v = 440 + H\gamma_{sat} = 440 + 8(122.4) = 1419.2\ lb/ft^2.$

Uo, hydrostatic pressures:

@ 4' depth:

$Uo = 0.$

@ 12' depth

$Uo = H\gamma_w = 8(62.4) = 499.2\ lb/ft^2.$

$\bar{\sigma}v$, effective vertical pressures:

@ 4' depth:

$\bar{\sigma}_v = \sigma_v - Uo = 440 - 0 = 440\ lb/ft^2.$

@ 12' depth:

$\bar{\sigma}_v = \sigma_v - Uo = 1419.2 - 499.2 = 920\ lb/ft^2.$

$\bar{\sigma}_{ho}$, effective horizontal pressures:

@ 4' depth:

$\bar{\sigma}_{ho} = K_o\bar{\sigma}_v = (0.5)(440) = 220\ lb/ft^2.$

@ 12' depth:

$\bar{\sigma}_{ho} = K_o\bar{\sigma}_v = (0.5)(920) = 460\ lb/ft^2.$

σ_{ho}, total horizontal pressures:

@ 4' depth:

$\sigma_{ho} = \bar{\sigma}_{ho} + Uo = 220 + 0 = 220\ lb/ft^2.$

@ 12' depth:

$\sigma_{ho} = \bar{\sigma}_{ho} + Uo = 460 + 499.2 = 959.2\ lb/ft^2.$

EXAMPLE D.2.: Seepage Pressures:

Given: A 12-foot high headwall of a drop structure is backfilled with a moderately permeable SC-SM material compacted to a moist density of 110 lb/ft^3(γ_{sat} = 122.4 lb/ft^3 and γ_{sub} = 60 lb/ft^3). $\bar{\phi} = 28^o$. Drainage is required to control uplift; therefore, a 4-foot-high coarse drain is used, which is relieved through weep holes. The fill is always saturated to the top. During design flow, a flow depth (and head) of 4 feet develops over the top of the wall.

The assumed properties of the drain fill are $\bar{\phi} = 35^o$, γ_m = 100 lb/ft^3, γ_{sub} = 50 lb/ft^3 and γsat = 112 lb/ft^3.

Determine: The lateral earth pressures for structural design of the headwall.

Procedure: A review of the flow net sketched for this problem indicates that the steepest gradient for this configuration is vertical, next to the wall. Consequently, the analysis will include the effects of seepage forces vertically and transfer them laterally using the appropriate lateral earth pressure coefficients.

In contrast, if a thin drain zone extended vertically up the face of the wall and the source of water was groundwater flow, the flow lines would be orientated more or less horizontally and the horizontal component of the seepage force (unaltered by lateral earth pressure coefficients) would probably be more critical.

For the example problem, Figure 42 indicates that for a non-yielding wall and materials with more than 5% fines, the K_o = at-rest curve on Figure 44 should be used. Using Figure 44 and $\bar{\phi} = 28^o$ for the SC-SM material, find $K_o = 0.63$ and for $\bar{\phi} = 35^o$ for the drain material, find $K_o = 0.53$.

This problem and the accounting for vertical seepage forces can probably be best handled by calculating the pressures and sketching all of the involved pressure diagrams.

The following computations serve to explain the components of the earth pressure diagrams, which lead to the one used for structural design (σ_{ho} diagram).

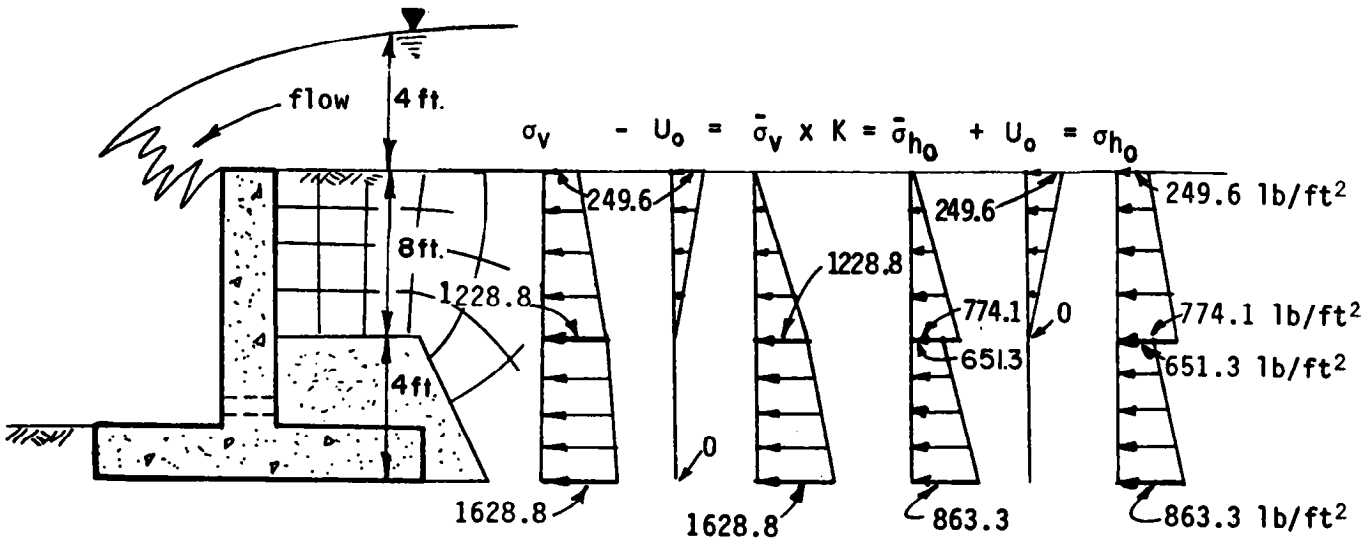

σv, total vertical pressures:

@ top of wall:

$\sigma_v = d\gamma_w = (4)(62.4) = 249.6$ lb/ft^2 (the water pressure from the design flow is a part of the total).

@ 8' depth:

$\sigma_v = 249.6 + 8(\gamma_{sat}) = 249.6 + (8)(122.4) = 1228.8$ lb/ft^2.

@ 12' depth:

$\sigma_v = 1228.8 + 4(\gamma_m) = 122.8 + (4)(100) = 1628.8$ lb/ft^2. (Note that since the drain is free of hydrostatic pressures and not saturated, the moist unit weight is used).

Uo, hydrostatic pressures:

@ top of wall:

$Uo = d(\gamma_w) = (4)(62.4) = 249.6$ lb/ft^2.

@ 8' depth:

$Uo = 0$.

Since the drain relieves all hydrostatic pressure, the hydrostatic pressure in the soil must also drop to 0 at the contact with the drain.

@ 12' depth:

$Uo = 0$. (Assumes that there is little or no head build-up through the weep holes; that is to say that the assumed weep hole sizes have a far greater capacity than the drain).

$\bar{\sigma}_v$, effective vertical pressures:

@ top of wall:

$\bar{\sigma}_v = \sigma_v - Uo = 249.6 - 249.6 = 0$.

@ 8' depth:

$\bar{\sigma}_v = \sigma_v - Uo = 1228.8 - 0 = 1228.8$ lb/ft^2.

Note: If the 8 feet of soil were simply saturated without the 4 foot depth of flow or any downward seepage, the effective vertical stress would only amount to the buoyant weight of soil, $\bar{\sigma}_v = H(\gamma_{sat} - \gamma_w) = 8(122.4 - 62.4) = 480$ lb/ft^2. The seepage pressure downward to the contact of the soil and drain is operating under a total head loss of 12 feet or a unit seepage pressure of $Ps = h(\gamma_w) = (12)(62.4) = 748.8$ lb/ft^2. This, when added to the static effective vertical pressure, verifies the 1228.8 lb/ft^2 pressure calculated above when using the pressure diagrams (1228.8 lb/ft^2 = 748.8 lb/ft^2 + 480.0 lb/ft^2).

@ 12' depth:

$\sigma_v = 1228.8 + H(\gamma_m) = 1228.8 + 4(100) = 1628.8$ lb/ft^2, or

$\bar{\sigma}_v = \sigma_v - Uo = 1628.8 - 0 = 1628.8$ lb/ft^2.

$\bar{\sigma}_{ho}$, effective lateral pressures:

@ top of wall:

$\bar{\sigma}_{ho} = 0.$

@ 8' depth (within SC-SM material) :

$\bar{\sigma}_{ho} = K_o \bar{\sigma}_v = (0.63)(1228.8) = 774.1$ lb/ft^2.

@ 8' depth (within drain material):

$\bar{\sigma}_{ho} = K_o \bar{\sigma}_v = (0.53)(1228.8) = 651.3$ lb/ft^2.

@ 12' depth:

$\bar{\sigma}_{ho} = K_o \bar{\sigma}_v = (0.53)(1628.8) = 863.3$ lb/ft^2.

σ_{ho}, total lateral pressures:

@ top of wall:

$\sigma_{ho} = \bar{\sigma}ho + Uo = 0 + 249.6 = 249.6$ lb/ft^2.

@ 8' depth (within SC-SM material):

$\sigma_{ho} = \bar{\sigma}ho + Uo = 774.1 + 0 = 774.1$ lb/ft^2.

@ 8' depth (within drain material):

$\sigma_{ho} = \bar{\sigma}_{ho} + Uo = 651.3 + 0 = 651.3$ lb/ft^2.

@ 12' depth:

$\sigma_{ho} = \bar{\sigma}_{ho} + Uo = 863.3 + 0 = 863.3$ lb/ft^2.

Note: A 0 or negligible hydrostatic pressure is assumed at the drainfill for convenience of demonstrating the seepage pressures. In reality, some pressure will likely exist to create the seepage through the drainfill and outlets. This should be considered and probably verified and disregarded if negligible.

EXAMPLE D.3.: Excess Pore Pressures:

Given: A 16-foot high retaining wall is desired; the thickness will be assumed to be 17 inches. Backfill is a low to moderately permeable SC material, $\bar{\phi} = 26^o$, $\phi = 15^o$. It will be compacted to about $\gamma_m = 110$ lb/ft^3 at w = 20%, $\gamma sat = 126$ lb/ft^3.

The backfill is wet most of the time; however, a drain has been provided to minimize hydrostatic and seepage forces. The backfill is normally level at the top of wall.

A gravel operation nearby will be stockpiling materials near the top of the wall from time to time to a height of about 6 feet ($\gamma_m = 100$ lb/ft^3). This load will be added and removed quickly by modern equipment.

Determine: The maximum lateral pressures that may occur on the wall.

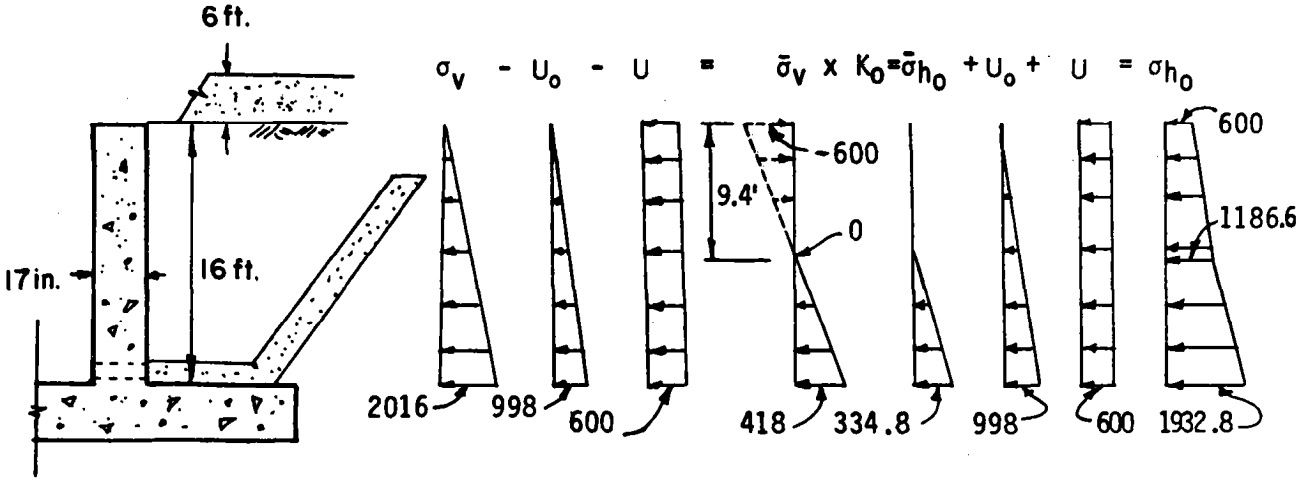

Procedure:

Check Yielding: $\frac{t}{H} = \frac{17/12}{16} = 0.088 > 0.085$. ∴ wall is non-yielding.

Figure 42 indicates that for non-yielding walls and more than 5% fines in the backfill the K_o = at-rest curve on Figure 44 should be used.

Using Figure 44 and $\phi = 15^o$ find $K_o = 0.8$ (note that ϕ rather than $\bar{\phi}$ is used since the rapid loading of surcharge is assumed to cause temporary undrained strength conditions or, in other words, excess pore pressures).

σv, total pressure:

@ 16' depth:

$\sigma_v = H\gamma_{sat} = (16)(126) = 2016\ lb/ft^2$.

Note: Normally a moist unit weight might be used, but when the soil is very wet or near saturated and a surcharge load is rapidly applied, saturation will temporarily increase due to the compression. Therefore, saturated unit weight is considered an applicable assumption for this condition.

Uo, hydrostatic pressures:

@ top of wall:

Uo = 0.

@ 16' depth:

$Uo = H_w = (16)(62.4) = 998.4\ lb/ft^2$.

U, excess pore pressures:

The excess pore pressure, U, will develop and will be temporarily carried by pore water, since the load is applied faster than the pore water can relieve itself into the drain (due to the low permeability of the soil it is in).

The vertical surcharge = 6(100) = 600 lb/ft^2 and temporarily acts equally in all directions uniformly throughout the soil by way of the excess pore pressure. This is a uniform lateral pressure. As the drain begins to relieve this excess pore pressure, it will return to 0 near the drain first, and then gradually return to the original hydrostatic value up through the soil structure. Eventually, the excess pore pressure will return to zero everywhere throughout the soil and the surcharge will then be carried fully by the soil grains themselves (the pore pressure will have returned to its original hydrostatic pore pressure).

$\bar{\sigma}v$, effective vertical pressures:

@ top of wall:

$\bar{\sigma}_v = \sigma_v - Uo - U = 0 - 0 - 600 = -600$ lb/ft^2.

Note: This may cause a temporary loss of local (unconfined) shear strength (bearing capacity) in the surface of backfill, possibly soft quick conditions near the fill edges, and even free water in some cases.

@ 16' depth:

$\bar{\sigma}_v = \sigma_v - Uo - U = 2016-998-600 = 418$ lb/ft^2.

The location where the effective vertical stress, $\bar{\sigma}_v$, returns to 0 can be determined by the slope interception method:

$$\text{slope} = \frac{600 + 418}{16} = 63.6 \text{ lb/ft}^2\text{/ft};$$

$$\text{interception} = \frac{600}{63.6} = 9.4' \text{ from top.}$$

$\bar{\sigma}_{ho}$, effective lateral pressures:

@ top of wall:

Here, $\bar{\sigma}_v$ is -600; however, soil is not assumed to have any tensile strength; therefore, for purposes of determining lateral earth pressures, $\bar{\sigma}_v$ will be assumed as 0.

$\bar{\sigma}_h = K_o\bar{\sigma}_v = (0.8)(0) = 0.$

@ 9.4' depth:

$\bar{\sigma}_{ho} = K_o\bar{\sigma}_v = (0.8)(0) = 0.$

@ 16' depth:

$\bar{\sigma}_{ho} = K_o\bar{\sigma}_v = (0.8)(418) = 334.4$ lb/ft^2.

σ_{ho}, total lateral pressures:

@ top of wall:

$\sigma_{ho} = \bar{\sigma}_{ho} + Uo + U = 0 + 0 + 600 = 600$ lb/ft^2.

@ 9.4' depth:

$\sigma_{ho} = \bar{\sigma}_{ho} + Uo + U = 0 + 9.4(62.4) + 600 = 1186.6$ lb/ft^2.

@ 16' depth:

$\sigma_{ho} = \bar{\sigma}_{ho} + Uo + U = 334.8 + 998 + 600 = 1932.8$ lb/ft^2.

EXAMPLE E.1.: Effects of Surcharge Loads:

1. Uniform Loads:

Given: A 12-foot high wall will be backfilled with clean sands and gravels, $\bar{\phi} = 32^o$, $\gamma_{sat} = 125$ lb/ft^3, compacted to $\gamma_m = 115$ lb/ft^3 at w = 15%. The wall is the side of a box drop inlet and therefore non-yielding. Backfill will be to the top of the wall; however, it is likely that up to 1000 lb/ft^2 uniform surcharge may occur near the wall.

The backfill is not drained; however, the surcharge will be added gradually over a prolonged period. A permanent groundwater table is 4 feet below the ground surface.

Determine: The lateral earth pressures for structural design.

Procedure: Figure 42 indicates that for non-yielding conditions and clean backfill the $K_o = 1\text{-}\sin\bar{\phi}$ curve on Figure 44 should be used. Using Figure 44, $\bar{\phi} = 32^o$, and the $K_o = 1\text{-}\sin\bar{\phi}$ curve, find $K_o = 0.48$.

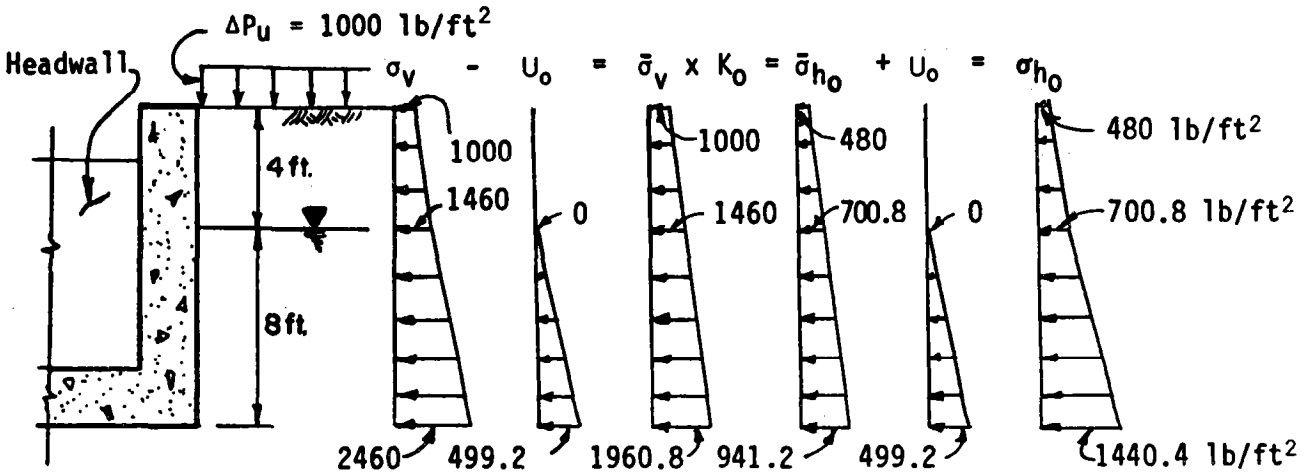

σ_v, total vertical pressures:

@ top of wall:

σ_v = 1000 lb/ft^2.

@ 4' depth:

σ_v = 1000 + 4(115) = 1460 lb/ft^2.

@ 12' depth:

σ_v = 1460 + (8)(125) = 2460 lb/ft^2.

Uo, hydrostatic pressures:

@ top of wall:

Uo = 0.

@ 4' depth:

Uo = 0.

@ 12' depth:

$Uo = (8)(62.4) = 499.2\ lb/ft^2.$

$\bar{\sigma}_v$, effective vertical pressures:

@ top of wall:

$\bar{\sigma}_v = \sigma_v - Uo = 1000 - 0 = 1000\ lb/ft^2.$

@ 4' depth:

$\bar{\sigma}_v = \sigma_v - Uo = 1460 - 0 = 1460\ lb/ft^2.$

@ 12' depth:

$\bar{\sigma}_v = \sigma_v - Uo = 2460 - 499.2 = 1960.8\ lb/ft^2.$

$\bar{\sigma}_{ho}$, effective lateral pressures:

@ top of wall:

$\bar{\sigma}_{ho} = K_o\bar{\sigma}_v = (0.48)(1000) = 480\ lb/ft^2.$

@ 4' depth:

$\bar{\sigma}_{ho} = K_o\bar{\sigma}_v = (0.48)(1460) = 700.8\ lb/ft^2.$

@ 12' depth:

$\bar{\sigma}_{ho} = K_o\bar{\sigma}_v = (0.48)(1960.8) = 941.2\ lb/ft^2.$

σ_{ho}, total lateral pressures:

@ top of wall:

$\sigma_{ho} = \bar{\sigma}_{ho} + Uo = 480 + 0 = 480\ lb/ft^2.$

@ 4' depth:

$\sigma_{ho} = \bar{\sigma}_{ho} + Uo = 700.8 + 0 = 700.8\ lb/ft^2.$

@ 12' depth:

$\sigma_{ho} = \bar{\sigma}_{ho} + Uo = 941.2 + 499.2 = 1440.4\ lb/ft^2.$

EXAMPLE E.2.: Sloping Earthfill Loads:

Given: A 12-foot high wall will be backfilled with clean sands and gravels, $\bar{\phi} = 32^{o}$, $\gamma_m = 115$ lb/ft^3 at w = 15%. The wall is restrained from yeilding. The backfill will slope at 2:1 from the top of the wall to a height of 4 feet above the wall and then become level.

The backfill is well drained and there is no source of water to develop hydrostatic pressures.

Determine: The lateral pressures for structural design and stability analysis.

Procedure: Figure 42 indicates that for clean soils and non-yielding conditions the $K_o = 1\text{-}\sin\bar{\phi}$ curve on Figure 44 should be used.

Using Figure 44, $\bar{\phi} = 32^{o}$ and the $K_o = 1\text{-}\sin\bar{\phi}$ curve, find $K_o = 0.48$. Also, note the reference to Figure 47 for correction for the sloping backfill.

Using Figure 47, $\bar{\phi} = 32^{o}$, Z = 2, $H_1 = 4'$, and $(\frac{H_1}{H}) = 4/12 = 0.33$, find F = 1.18.

Note: These values of H, H_1, and F are for structural analysis only. For purposes of stability analysis, H is the distance from the bottom of the footing to the surface of the sloping earthfill, and H_1 is the vertical

distance above this point, to where the sloping surcharge levels off. Therefore, an estimate of footing length and a new F factor will be necessary when determining pressures for stability analysis.

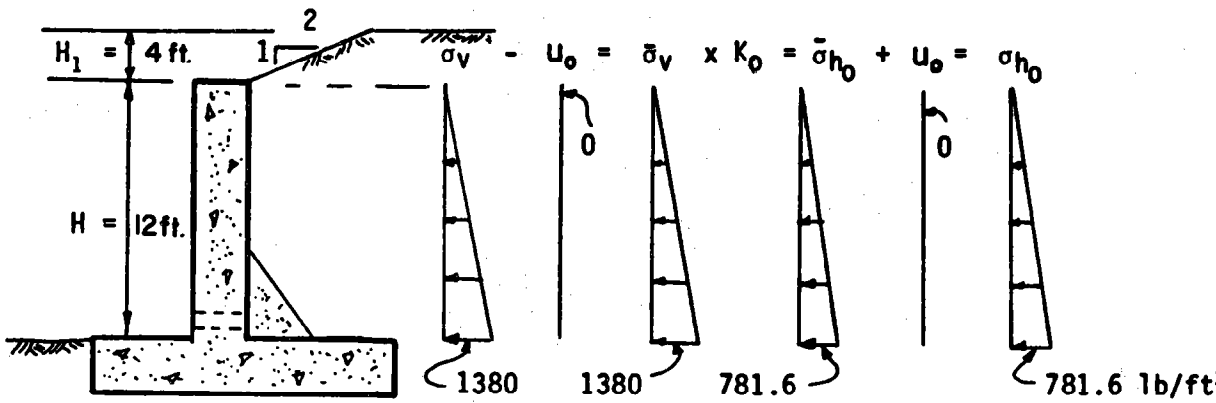

a. Structural design pressures:

σv, total vertical pressures:

@ top of wall:

$\sigma_v = 0.$

@ 12' depth:

$\sigma_v = (12)(115) = 1380\ lb/ft^2.$

Uo, hydrostatic pressures:

Uo = 0 at all depths.

$\bar{\sigma}v$, effective vertical pressures:

@ top of wall:

$\bar{\sigma}_v = \sigma_v - Uo = 0 - 0 = 0.$

@ 12' depth:

$\bar{\sigma}_v = \sigma_v - Uo = 1380 - 0 = 1380\ lb/ft^2.$

$\bar{\sigma}_{ho}$, effective lateral pressures:

@ top of wall:

$\bar{\sigma}_{ho} = K_o F \bar{\sigma}_v = (0.48)(1.18)(0) = 0.$

@ 12' depth:

$\bar{\sigma}_{ho} = K_o F \bar{\sigma}_v = (0.48)(1.18)(1380) = 781.6\ lb/ft^2.$

σ_{ho}, total lateral pressures:

@ top of wall:

$\sigma_{ho} = \bar{\sigma}_{ho} + Uo = 0.$

@ 12' depth:

$\sigma_{ho} = \bar{\sigma}_{ho} + Uo = 781.6\ lb/ft^2.$

b. Stability Analysis Pressures: Find the estimated footing length using Figure 50, H = 12', and K ≃ 0.48; find ℓ ≃ 8.5'. Correct for surcharge; ∴ ℓ≃ (1.1)(8.5) = 9.35', use 9.0' as an estimate. Determine H = 15' and H_1 = 1' from sketch.

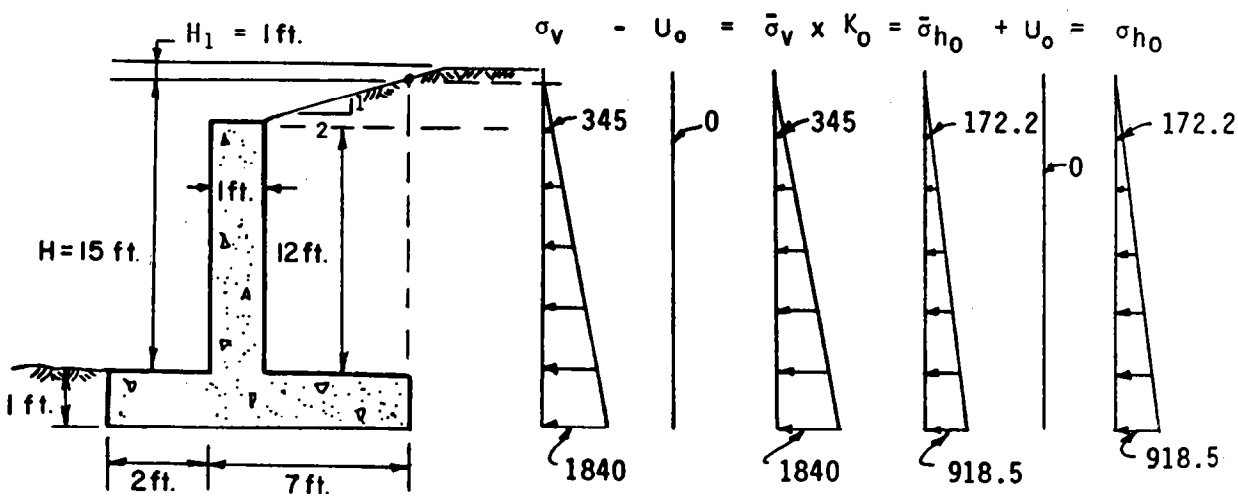

Using Figure 47, $\bar{\phi} = 32^{o}$, Z = 2, $H_1 = 1'$, and ($\frac{H_1}{H} = 1/15 = 0.067$) find F = 1.04.

<u>σv, total vertical pressures:</u>

<u>@ fill surface:</u>

$\sigma_v = 0.$

<u>@ top of wall:</u>

$\sigma_v = 3(115) = 345\ lb/ft^2.$

<u>@ bottom of footing:</u>

$\sigma_v = 16\ (115) = 1840\ lb/ft^2.$

<u>Uo, hydrostatic pressures:</u>

Uo = 0 throughout the drained fill.

<u>$\bar{\sigma} v$, effective vertical pressures:</u>

<u>@ fill surface:</u>

$\bar{\sigma}_v = \sigma_v - U_o = 0 - 0 = 0.$

<u>@ top of wall:</u>

$\bar{\sigma}_v = 345 - 0 - 345\ lb/ft^2.$

<u>@ bottom of footing:</u>

$\bar{\sigma}_v = 1840 - 0 = 1840\ lb/ft^2.$

<u>$\bar{\sigma}_{ho}$, effective lateral pressures:</u>

<u>@ fill surface:</u>

$\bar{\sigma}h_o = K_o F \bar{\sigma}_v = (0.48)(1.04)(0) = 0.$

@ top of wall:

$\bar{\sigma}h_o = (0.48)(1.04)(345) = 172.2\ lb/ft^2.$

@ bottom of footing:

$\bar{\sigma}h_o = (0.48)(1.04)(1840) = 918.5\ lb/ft^2.$

σ_{ho}, total lateral pressures:

@ fill surface:

$\sigma h_o = \bar{\sigma}h_o + U_o = 0 + 0 = 0.$

@ top of wall:

$\sigma h_o = 172.2 + 0 = 172.2\ lb/ft^2.$

@ bottom of footing:

$\sigma h_o = 918.5 + 0 = 918.5\ lb/ft^2.$

EXAMPLE E.3.: Line Loads:

Given: A 14-foot high wall that should not be allowed to deflect since a 2000 $lb/ft^2/ft$ line load (warehouse footing) will be placed about 6 feet from the top of the wall.

The backfill material will be a mixture of sands and gravels with silt and clay fines. $\bar{\phi} \simeq 25^o$ to 30°, $\gamma_m \simeq 120\ lb/ft^3$. It will be well-drained with a filter, drain material, and weep holes. The fill surface will be asphalt covered and a separate surface storm drainage system will be installed; therefore, hydrostatic pressures should not be a problem.

Determine: The lateral earth pressures for design. Since it is desirable to not have the wall yield, a conservative safety factor for sliding and overturning should be used and a wall thickness selected that will not allow detrimental stem deflection.

Procedure: Check minimum wall thickness; $t/H \geq 0.085$; $t_{min} = 0.085(14) = 1.19$ ft. ∴ Use 15 inches.

Using Figure 42 for non-yielding walls and materials with more than 5% fines we find that the K_o = at-rest curve on Figure 44 is recommended. Using the K_o = at-rest curve and $\bar{\phi} = 25^o$ on Figure 44, find $K_o = 0.67$.

Referring to Figure 48 for line load surcharges, find the relationship $\bar{\sigma}_{hL} = 1.27 \frac{\Delta P_L x^2 d}{r^4}$ where the parameters are defined by the sketch on Figure 48 and:

x = 6 feet and constant,

P_L = 2000 lb/ft^2/ft and constant,

d = variable depth to be considered,

$r = x^2+s^2+d^2$ (S = 0 for line loads).

The procedure here will be to tabulate the $\bar{\sigma}_{hL}$ values, say at depth increments of 2 feet, and then to add these increments to the lateral earth pressure from the fill.

Example computations follow for a depth 2 feet below the fill surface; the rest of the computations are not shown but are included in the tabulation.

@ 2' depth:

$\sigma_v = H\gamma_m = (2)(120) = 240$ lb/ft^2,

$U_o = 0$ (throughout the fill),

$\bar{\sigma}_v = \sigma_v - U_o = 240 - 0 = 240$ lb/ft^2,

$\bar{\sigma}h_o = K_o\bar{\sigma}_v + \bar{\sigma}_{hL}$.

Where:

$K_o\bar{\sigma}_v = (0.67)(240) = 160.8\ lb/ft^2$ and:

$$\bar{\sigma}_{hL} = 1.27\ \frac{(\Delta P_L)(x^2)(d)}{r^4} = (1.27)\ \frac{(2000)(6)^2(2)}{(6.32)^4} = 114.6\ lb/ft^2.$$

$\therefore \bar{\sigma}h_o = 160.8 + 114.6 = 275.4\ lb/ft^2$ and:

$\sigma h_o = \bar{\sigma}h_o + U_o = 275.4 + 0 = 275.4\ lb/ft^2.$

Depth	$\bar{\sigma}_v$	$K_0\bar{\sigma}_v$	$\bar{\sigma}hL$	$\bar{\sigma}h_o$	σh_o
2	240	160.8	114.6	275.4	275.4
4	480	321.6	135.2	456.8	456.8
6	720	482.4	105.8	588.2	588.2
8	960	643.2	73.2	716.4	716.4
10	1200	804.0	49.4	853.4	853.4
12	1440	964.8	33.8	998.6	998.6
14	1680	1125.6	23.8	1149.4	1149.4

Note: The combined earth pressure diagram is not a linear ("hydrostatic") relationship; the resultant force is not at the 1/3 point of the wall height. This must be taken into consideration during structural design.

EXAMPLE E.4.: Point Loads:

Given: A 14-foot wall with a desired thickness of about 12 inches will have a 5-ton concentrated load placed about 6 feet from the edge of it. The backfill material will be clayey silts and silty clays level to the top and will be well-drained with filters, drains, and weep holes.

Determine: The lateral earth pressures for design.

Procedure:

Check yielding condition: $t/H = \frac{12/12}{14} = 0.071 < 0.085$, $\therefore$ wall is yielding.

Figure 42 recommends using the equivalent fluid pressures on Figure 46. Figure 46 indicates that soil type 4 is probably applicable and, with $H_1/H=0$, $EFP_h = 100\ lb/ft^2$ is recommended.

Figure 48 recommends the relationship $\bar{\sigma}_{hc} = 0.95 \frac{\Delta P_p x^2 d}{r^5}$ where the variables are defined in the sketch on Figure 48.

In this procedure, a tabulation will be made of the earth pressure and surcharge pressure vs. depth. Since the surcharge pressure is also a function of s, the distance away from the point load parallel to the wall, tabulations must be made for different values of s also. Computations are included for the first depth increment only (2 foot) to demonstrate the procedure.

@ 2' depth:

$\bar{\sigma}h_o = H(EFP) = 2(100) = 200\ lb/ft.$

<u>for s = 0</u>: $\bar{\sigma}_{hc} = 0.95 \dfrac{(10{,}000)(6)^2(2)}{[(6)^2+(0)^2+(2)^2]\ 5/2} = 67.5\ \text{lb/ft}^2$ and

$$\sigma_{ho} = \bar{\sigma}_{ho} + \bar{\sigma}_{hc} + U_o = 200 + 67.5 + 0 = 267.5\ \text{lb/ft}^2.$$

<u>for s = 2'</u>: $\bar{\sigma}_{hc} = 0.95 \dfrac{(10{,}000)(6)^2(2)}{[(6)^2+(2)^2+(2)^2]\ 5/2} = 53.0\ \text{lb/ft}^2$ and

$$\sigma_{ho} = \bar{\sigma}_{ho} + \bar{\sigma}_{hc} + U_o = 200 + 53.0 + 0 = 253\ \text{lb/ft}^2,$$

and etc., to complete the tabulated values for the total lateral earth pressures.

		@s = 0'		@s = 2'		@s = 4'		@s = 6'		@s = 8'	
Depth	$\bar{\sigma}_{ho}$	$\bar{\sigma}_{hc}$	σ_{ho}	$\bar{\sigma}_{hc}$	σ_{ho}	$\bar{\sigma}_{hc}$	σ_{ho}	$\bar{\sigma}_{hc}$	σ_{ho}	$\bar{\sigma}_{hc}$	σ_{ho}
0	0	0	0	0	0	0	0	0	0	0	0
2	200	67.5	267.5	53.0	253.0	29.0	229.0	13.5	213.5	6.0	206.5
4	400	70.0	470.0	58.5	458.5	36.0	436.0	19.0	419.0	9.5	409.5
6	600	46.5	646.5	41.0	641.0	28.0	628.0	17.0	617.0	9.5	609.5
8	800	27.5	827.5	25.0	825.0	19.0	819.0	12.5	812.5	8.0	808.0
10	1000	16.0	1016.0	14.5	1014.5	12.0	1012.0	9.0	1009.0	6.0	1006.0
12	1200	9.5	1209.0	9.0	1219.0	7.5	1207.5	6.0	1206.0	4.5	1204.5
14	1400	6.0	1406.0	5.5	1405.5	5.0	1405.0	4.0	1404.0	3.0	1403.0

As can be seen from the tabulated data the combined total lateral earth pressure does not vary linearly with detph.

Also, @s = 0, the rapid dissipation of surcharge pressure with depth can be observed even when inspecting the zone at the minimum horizontal distance from the surcharge.

The rapid dissipation can also be observed at different vertical sections (e.g., at 8 feet along the wall away from the load, the greatest earth pressure increase is 9.5 lb/ft and occurs between the depths of 4-6 ft.)

BIBLIOGRAPHY

1. Coulomb, C.A. (1776) - Essai sur une Application des Regles des Maximis et Minimis a quelques Problemes de Statique Retatifs a l'Architecture, Mem. acad. roy. pres. divers savants, Vol. 7, Paris.

2. Rankine, W.J.M. (1857), On the Stability of Loose Earth, Phil. Trans. Roy. Soc. London, Vol. 147.

3. Terzaghi, Karl - Structure and Volume of Voids in Soils, Erdbaumechanik auf Bodenphysikalisher Grundlage, Translated by A. Casagrande in "From Theory to Practice in Soil Mechanics," John Wiley & Sons.

4. Terzaghi, Karl - Large Retaining Wall Tests, Engineering News Record, Vol. 112, 1934.

5. Terzaghi and Peck - "Soil Mechanics in Engineering Practice," John Wiley and Sons.

6. Terzaghi, Karl - "From Theory to Practice in Soil Mechanics," John Wiley and Sons.

7. Wu, T.H. - "Soil Mechanics," Allyn and Bacon.

8. Taylor, Donald W. - "Fundamentals of Soil Mechanics," John Wiley & Sons.

9. Harvard University - Lecture Notes on Theoretical Soil Mechaniccs, Arthur Casagrande, 1968, 1969.

10. Spangler, Merlin G. - "Soil Engineering," International Textbook Company.

11. Seed and Whitman - "Design of Earth Retaining Structures for Dynamic Loads," 1970 ASCE Specialty Conference, Lateral Stresses and Design of Earth Retaining Structures.

12. Means and Parcher - "Soil Mechanics and Foundations, Merrill.

13. Brooker and Ireland - "Earth Pressures at Rest Related to Stress History," Canadian Geotechnical Journal, Vol. II, No. I, February 1965.

14. Casagrande, L. - "Comments on Conventional Design of Retaining Wall Structures," Journal of the Soil Mechanics and Foundation Division, ASCE, Vol. 99, No. SM-2, Proc. Paper 9568, February 1973.

15. Gould, James P. - "Lateral Pressures on Rigid Permanent Structures, 1970 ASCE Specialty Conference, Lateral Stresses and Design of Earth Retaining Structures.

16. Dunham, Clarence W. - "Theory and Practice of Reinforced Concrete," McGraw-Hill.

17. Soil Conservation Service, Soil Mechanics Notes 1, 3, 5 and 7.

18. Department of the Navy, Naval Facilities Engineering Command - Design Manual, NAVFAC DM-7, Soil Mechanics, Foundations, and Earth Structures.

19. Peck, Hanson, and Thornburn - "Foundation Engineering," John Wiley & Sons.

20. Soil Conservation Service - Standard Drawing 7-L-16000-6-7, Properties of Earth.

21. American Railway Engineers Association - "Retaining Walls, Part 5 and Footing Foundations, Part 3."

22. Henkel, David J. - "Geotechnical Considerations of Lateral Stresses, 1970 ASCE Specialty Conference, Lateral Stresses and Design of Earth Retaining Structures.

23. Cedergren, Harry, "Seepage, Drainage and Flow Nets," John Wiley and Sons.

24. Spangler, M.G., Bulletin No. 140, Iowa Engineering Experiment Station, Iowa City, Iowa.

25. Lambe and Whitman - "Soil Mechanics," John Wiley & Sons.

☆ U.S. Government Printing Office : 1990 - 261-486/20051