SECTION J - APPENDIX

Contents | Page

CRITERIA AND PROCEDURE FOR DESIGN OF THE STANDARD PWD BASIN

I. CRITERIA J-1

II. DESIGN CONSIDERATIONS AND METHOD OF ANALYSIS J-2

Tables

J-C1 Quantity Survey for Inlet Structure J-5

J-D1 " " " Gate Stem Pedestals J-6

J-D2 " " " Lift Pedestals J-6

J-E1 " " " R/C Monolithic Conduit J-7

J-E2 " " " R/C Anti-Seep Collars J-8

J-E3 " " " Conduit Cradle Type A1 or A2 Dams Class (a) Over 50 Feet High and Class (b) and (c) J-9

J-E4 " " " Conduit Cradle Type A1 or A2 Dams Less Than 50 Feet High J-10

J-E5 " " " Conduit Cradle Type B1 Bedding J-11

J-E6 " " " Anti-Seep Collars for Type A1 and A2 Cradles for Dams Class (a) Over 50 Feet High and Class (b) and (c) J-12

J-E7 " " " Anti-Seep Collars Type A1 and A2 Cradles For Dams Class (a) Less Than 50 Feet High J-13

J-E8 " " " Anti-Seep Collars Type B1 Bedding for Dams Class (a) Over 50 Feet High and Class (b) and (c) J-14

J-E9 " " " Anti-Seep Collars Type B1 Bedding for Dams Class (a) Less Than 50 Feet High . J-15

J-F1 " " " PWD Basin J-16

J-F2 " " " Impact Basin J-17

SECTION J - APPENDIX

Criteria and Procedure for the Design of Standard PWD Outlet Structures

I. CRITERIA

A. For general proportions and profile: Refer to ASCE Journal of the Hydraulics Division, Vol. 84, No. HY2, April 1958, Part I, pages 1616-77 to 91. Discussion by J. R. Argue of paper, "The Hydraulic Design of Stilling Basins, Small Basins for Pipe or Open Channel Outlet - No Tail Water Required" (Basin VI).

B. Limitations on use of standard plans.

1. Pipe velocities (pipe exit or outlet structure entrance) - Maximum allowable velocity is associated with an equivalent head of three conduit diameters at full pipe flow, except for conduit diameter 18 in. and smaller. Although not recommended, where this type of basin is to be used for heads in excess of 3d, a longer basin will be required to contain the jet. To simplify the number of standard structures, the length of next larger structure is to be checked for jet trajectory. Although additional width is wasted, refining the engineering analysis is not justified on the basis of economy.

2. Tailwater - adequate tailwater depth is required to assure dissipation of jet energy and diffusion of the flow to distribute it across the exit sill.

3. In uplift from high groundwater conditions, special backfill or design modification is required.

C. Standardization of structure size: The following structure sizes will cover a wide range of conduit sizes and discharge capacity.

Size	Conduit Dia. In.1/	Length2/	Width3/	Cutoff4/
A	8	3'-6"	2'-8"	2'-0"
B	10 - 12	4'-6"	3'-6"	2'-0"
C	12 - 18	6'-6"	5'-4"	2'-0"
D	18 - 30	9'-6"	8'-3"	2'-3"
E	30 - 36	12'-7"	11'-0"	3'-0"
F	36 - 48	16'-8"	14'-4"	4'-0"
G	48 - 60	20'-9"	17'-10"	4'-0"
H	60	24'-10"	21'-4"	4'-0"

1/ Full pipe flow.
2/3/ The length and width are a function of a fixed sidewall flare.
4/ Cutoff is total height of downstream transverse sill.

D. Allowable Stresses

1. Concrete

f'c = 3000 psi
fc = 1350 psi

2. Reinforcing

fs = 20,000 psi
Shrinkage and temperature steel p = 0.0025 in each direction

3. Earth bearing pressures

Passive
K_p = 2.0
ϕ = 20° silty clay
Rock riprap required downstream of the cutoff for a distance equal to 4 x conduit diameter.

E. Loads

1. Lateral soil pressure

EFP = 65 pcf
K_a = 0.5

2. Sliding resistance

f = 0.33 masonry on clay

II. DESIGN CONSIDERATIONS AND METHODS OF ANALYSIS

The selection of the PWD basin in preference to other types of outlets is based primarily on economic consideration within the range of hydraulic and site limits. As an irrigation outlet this structure will be used under controlled outflow conditions. Its size selection is not necessarily based on the total available head at full pipe capacity but more likely at a Q that is maintained fairly constant over a range of heads by means of gate control. If the maximum possible discharge is to be passed through the structure, the structure should be sized for this discharge or added protection provided downstream of the structure for the short duration maximum flow.

Tailwater and downstream channel stability (erosion) must be predictable.

A. Structural elements

1. Sidewalls and headwalls are designed as horizontal and vertical beams divided by an assumed 45° boundary line.

2. Apron or slab is designed as a rigid U section.

B. Stability

1. Sliding - with the use of a downstream cutoff wall as listed in the "Standardized Structure Size" and with the use of rock riprap in the channel, no sliding problem is anticipated.

2. Overturning - no anticipated problem.

3. Uplift - special backfill material and drainage facilities are required in site conditions with high water table.

Table J-C1

QUANTITY SURVEY FOR INLET STRUCTURE

Structure Size	Conduit Inside Diameter	Reinforcing Steel	Type of Pipe		
			ASTM C76 AWWA C302	AWWA C300 AWWA C301	Welded Steel & CMP
			Concrete Volume		
	in.	lb	cu yd	cu yd	cu yd
A	8	109	--	--	1.33
B	10	108	--	--	1.32
C	12	127	1.47	--	1.57
D	14'	129	--	--	1.84
E	15	144	1.87	--	--
"	16	"	--	1.70	1.97
F	18	174	2.73	2.52	2.91
G	20	209	--	3.04	3.40
H	21	302	5.90	--	--
"	24	"	4.28	4.20	4.72
I	27	328	6.15	--	--
"	30	"	5.73	5.58	6.52
"	33	"	5.33	--	--
J	36	366	6.15	5.88	7.00

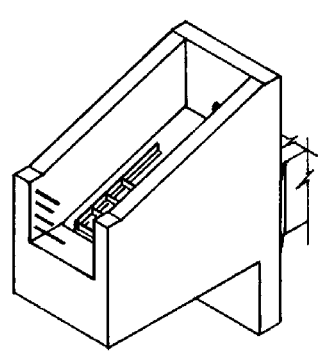

TABLE J-D1

QUANTITY SURVEY FOR GATE STEM PEDESTAL

Concrete volume	0.10 cu yd
Reinforcing steel	13.68 lb

TABLE J-D2

QUANTITY SURVEY FOR GATE LIFT PEDESTAL

Structure Size	Concrete Volume cu yd	Reinforcing Steel lb
A	0.27	--
B	0.47	--
C	0.74	44.25
D	2.41	18.05
E	3.70	24.05

TABLE J-E1

QUANTITY SURVEY FOR R/C MONOLITHIC CONDUIT
(Cu yd per lineal foot)

Conduit Inside Diameter D - inches	Thickness - t - inches						
	6	8	12	15	18	21	24
8	0.090	0.135	-	-	-	-	-
12	0.119	0.173	0.304	-	-	-	-
15	0.142	0.202	0.346	0.475	-	-	-
18	0.166	0.232	0.388	0.527	0.685	-	-
21	0.191	0.263	0.432	0.580	0.747	0.932	-
24	0.217	0.295	0.476	0.634	0.810	1.004	1.217
30	0.272	0.362	0.568	0.744	0.939	1.152	1.383
36	0.331	0.436	0.664	0.859	1.072	1.303	1.553
42	0.394	0.509	0.764	0.977	1.208	1.458	1.727

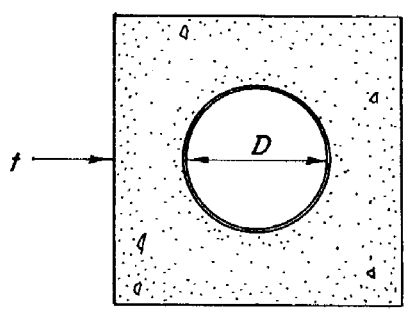

TABLE J-E2

QUANTITY SURVEY R/C MONOLITHIC CONDUIT ANTI-SEEP COLLARS

D+2t	V = Minimum projection of cutoff from conduit casing-ft.				
	1.50 1/	1.75 1/	2.00 1/	2.50 2/	3.00 2/
2'-0"	0.496 31.15	0.620 35.15	0.753 39.15	1.058 65.0	1.409 75.8
2'-3"	0.531 32.45	0.660 36.45	0.776 44.95	1.093 67.1	1.478 84.8
2'-6"	0.567 33.8	0.702 37.8	0.825 46.3	1.177 69.1	1.552 86.8
2'-9"	0.613 35.15	0.734 42.9	0.858 47.6	1.237 71.1	1.624 88.8
3'-0"	0.640 36.45	0.786 44.3	0.960 48.9	1.296 73.2	1.696 90.8
3'-3"	0.674 40.9	0.805 45.6	1.012 54.75	1.358 80.8	1.766 92.8
3'-6"	0.712 42.4	0.871 46.9	1.042 56.1	1.417 82.8	1.838 101.9
3'-9"	0.721 43.6	0.910 52.2	1.089 57.45	1.484 78.2	1.910 103.9
4'-0"	0.783 44.9	0.953 53.4	1.148 63.2	1.537 86.9	1.982 113.2
4'-3"	0.806 49.6	0.983 54.8	1.171 65.5	1.607 94.5	2.021 115.1
4'-6"	0.854 50.75	1.036 59.8	1.231 66.0	1.655 96.6	2.127 117.1
4'-9"	0.892 51.6	1.078 61.2	1.280 67.2	1.714 98.6	2.199 119.2
5'-0"	0.925 53.4	1.122 62.5	1.328 68.6	1.776 106.3	2.269 128.2

Note: Top figures are concrete volumes in cu yd; bottom figures are steel quantities in lb. Steel quantities are based on a maximum bar spacing on 12 in. center to center.

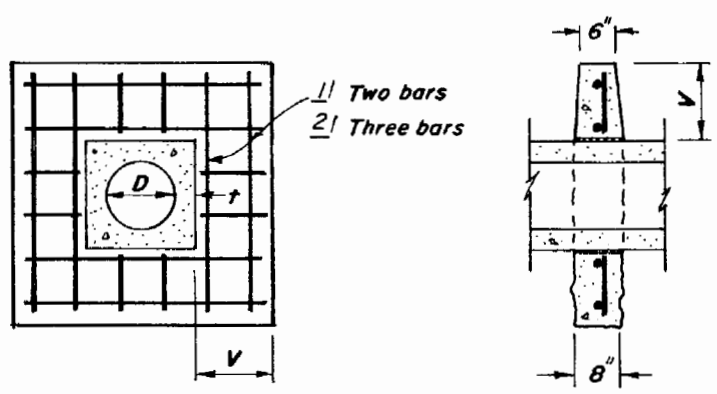

1/ Two bars.

2/ Three bars.

TABLE J-E3

QUANTITY SURVEY CONDUIT CRADLE TYPE A1 or A2
FOR DAMS CLASS (a) OVER 50 FEET HIGH AND CLASS (b) and (c)
(per foot conduit length)

Conduit Inside Diameter	Reinforcing Steel (Type A1 only)	Type of Conduit		
		ASTM C-76 ASTM C-361 AWWA C-302 (f'_c=6000 psi)	AWWA C-300 AWWA C-302 (f'_c=4500 psi)	AWWA C-301 1
		Concrete Volume		
inch	lb	cu yd	cu yd	cu yd
12	7.60	0.0930	--	--
15	9.41	0.1034	--	--
16	9.34	0.1145	--	0.1036
18	9.56	0.1263	--	0.1151
20	12.78	0.1386	0.1478	0.1271
21	13.07	0.1484	--	--
24	13.35	0.1629	0.1739	0.1602
27	13.72	0.1921	0.1994	--
30	13.86	0.2384	0.2329	0.2172
33	14.34	0.2569	0.2687	--
36	17.51	0.2943	0.3068	0.2820
42	24.17	0.3781	0.3992	0.3604
48	24.82	0.4674	0.4828	0.4478
54	28.60	0.5656	0.5849	0.5560
60	35.28	0.6754	0.6964	0.6650

1 AWWA C-301 ordinarily not available in diameter less than 42".

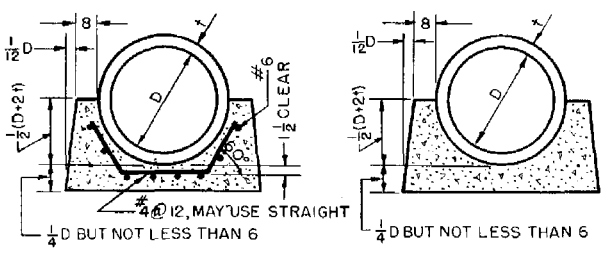

A1 CRADLE A2 CRADLE

TABLE J-E4

QUANTITY SURVEY CONDUIT CRADLE TYPE A1 AND A2
FOR DAMS LESS THAN 50 FEET HIGH
(per foot conduit length)

Conduit Inside Diameter	Reinforcing Steel (Type A1 only)	Type of Conduit: ASTM C-76, ASTM C-361, AWWA C-302 (f'_c=6000 psi)	Type of Conduit: AWWA C-300, AWWA C-302 (f'_c=4500 psi)	Type of Conduit: AWWA C-301 1/
		Concrete Volume		
inch	lb	cu yd	cu yd	cu yd
12	7.60	0.0903	--	--
15	9.41	0.1042	--	--
16	9.34	0.1101	--	0.0995
18	9.56	0.1210	--	0.1101
20	12.78	0.1321	0.1410	0.1210
21	13.07	0.1372	--	--
24	13.35	0.1540	0.1646	0.1514
27	13.72	0.1808	0.1879	--
30	13.86	0.2094	0.2185	0.2034
33	14.34	0.2399	0.2512	--
36	17.51	0.2740	0.2859	0.2622
42	24.17	0.3463	0.3616	0.3332
48	24.82	0.4307	0.4454	0.4121
54	28.60	0.5191	0.5374	0.5100
60	35.28	0.6177	0.6376	0.6078

1/ AWWA C-301 not ordinarily available in diameters less than 42".

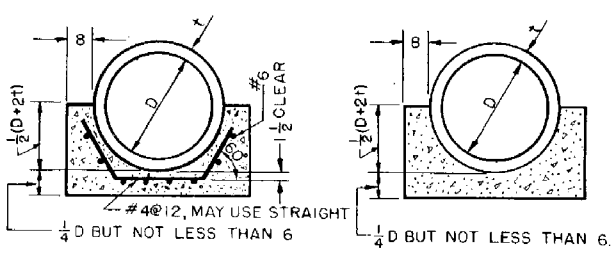

A1 CRADLE A2 CRADLE

TABLE J-E5

QUANTITY SURVEY CONDUIT CRADLE TYPE B1 BEDDING
FOR CLASS (a), (b) and (c) DAMS
(per foot conduit length)

Conduit Inside Diameter	Reinforcing Steel	Type of Conduit		
		ASTM C-76 ASTM C-361 AWWA C-302 (f'_c=6000 psi)	AWWA C-300 AWWA C-302 (f'_c=4500 psi)	AWWA C-301 1/
		Concrete Volume		
inch	lb	cu yd	cu yd	cu yd
12	--	0.0215	--	--
15	--	0.0266	--	--
16	--	0.0289	--	0.0249
18	--	0.0331	--	0.0289
20	--	0.0375	0.0410	0.0331
21	--	0.0390	--	--
24	--	0.0463	0.0507	0.0452
27	--	0.0536	0.0565	--
30	--	0.0612	0.0649	0.0558
33	--	0.0693	0.0738	--
36	--	0.0784	0.0832	0.0738
42	--	0.0989	0.1034	0.0923
48	--	0.1199	0.1256	0.1127
54	--	0.1426	0.1496	0.1391
60	--	0.1680	0.1756	0.1643

1/ AWWA C-301 not ordinarily available in diameters less than 42".

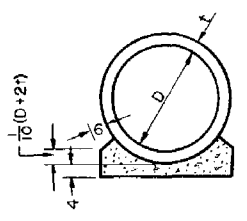

B1 BEDDING

TABLE J-E6

QUANTITY SURVEY ANTI-SEEP COLLARS TYPE A1 AND A2 CRADLES
FOR DAMS CLASS (a) OVER 50 FEET HIGH AND CLASS (b) AND (c)

Conduit Inside Diameter	Reinforcing Steel	Type of Conduit		
		ASTM C-76 ASTM C-361 AWWA C-302 (f'_c=6000 psi)	AWWA C-300 AWWA C-302 (f'_c=4500 psi)	AWWA C-301
		Concrete Volume		
inches	lb	cu yd	cu yd	cu yd
12	77.8	1.387	--	--
15	81.9	1.462	--	--
16	81.5	1.577	--	1.452
18	83.2	1.571	--	1.521
20	84.6	1.643	1.665	1.578
21	86.6	1.661	--	--
24	90.6	1.750	1.771	1.730
27	98.3	1.836	1.865	--
30	104.6	1.909	1.966	1.906
33	110.0	2.030	2.021	--
36	102.9	2.192	2.163	2.050
42	112.2	2.322	2.321	2.235
48	122.6	2.519	2.559	2.471
54	132.1	2.702	2.750	2.685
60	137.0	2.90	2.950	2.877

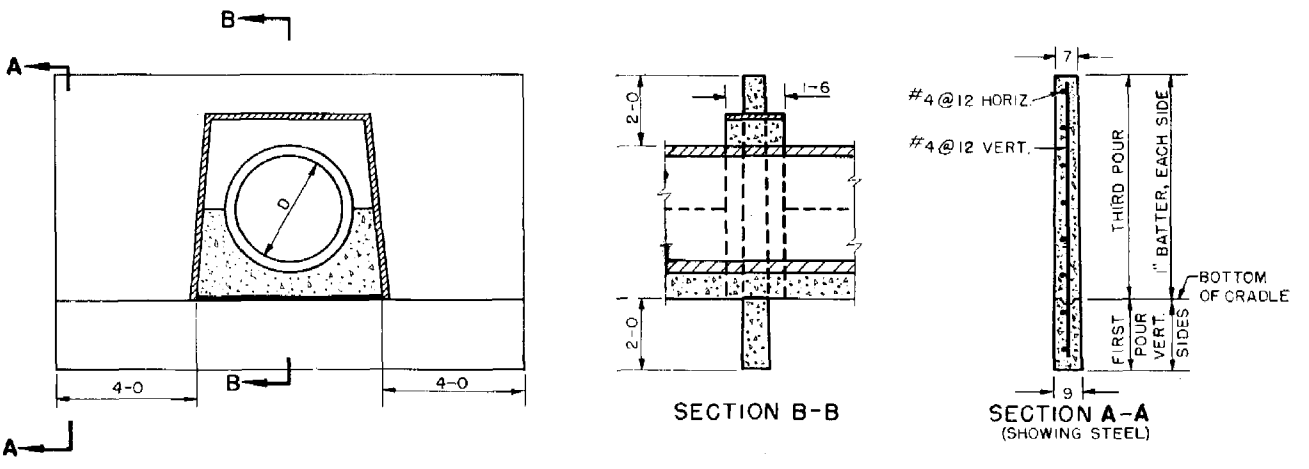

TABLE J-E7

QUANTITY SURVEY ANTI-SEEP COLLARS TYPE A1 AND A2 CRADLES
FOR DAMS CLASS (a) LESS THAN 50 FEET HIGH
(per collar)

Conduit Inside Diameter	Reinforcing Steel	Type of Conduit		
		ASTM C-76 ASTM C-361 ASTM C-302 (f'_c=6000 psi)	AWWA C-300 AWWA C-302 (f'_c=4500 psi)	AWWA C-301
		Concrete Volume		
inch	lb	cu yd	cu yd	cu yd
12	54.45	1.055	--	--
15	59.2	1.139	--	--
16	60.5	1.151	--	1.099
18	62.5	1.195	--	1.148
20	63.7	1.242	1.279	1.195
21	65.55	1.270	--	--
24	67.55	1.333	1.356	1.321
27	76.0	1.413	1.439	--
30	77.5	1.492	1.523	1.471
33	80.45	1.569	1.610	--
36	81.95	1.655	1.692	1.627
42	86.1	1.878	1.847	1.784
48	99.4	2.008	2.038	1.952
54	110.0	2.160	2.218	2.239
60	118.2	2.343	2.390	2.325

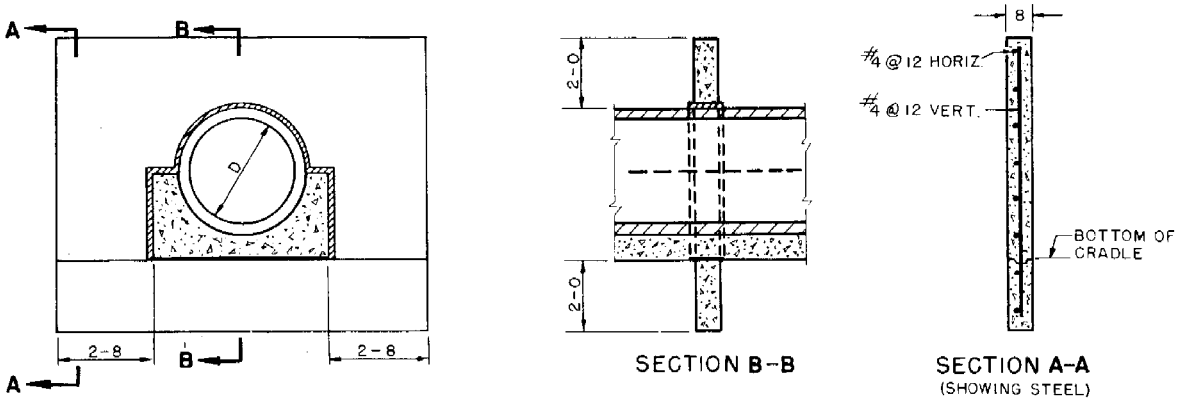

TABLE J-E8

QUANTITY SURVEY ANTI-SEEP COLLARS TYPE B1 BEDDING
FOR DAMS CLASS (a) OVER 50 FEET HIGH AND CLASS (b) AND (c)
(per collar)

Conduit Inside Diameter	Reinforcing Steel	Type of Conduit		
		ASTM C-76 ASTM C-361 ASTM C-302 (f'_c=6000 psi)	AWWA C-300 AWWA C-302 (f'_c=4500 psi)	AWWA C-301
		Concrete Volume		
inch	lb	cu yd	cu yd	cu yd
12	66.5	1.256	--	--
15	68.6	1.332	--	--
16	68.1	1.367	--	1.311
18	69.6	1.420	--	1.368
20	76.0	1.481	1.559	1.422
21	78.0	1.503	--	--
24	82.3	1.590	1.641	1.579
27	84.8	1.673	1.767	--
30	85.8	1.700	1.801	1.724
33	108.6	1.845	1.891	--
36	112.2	1.943	1.991	1.887
42	117.4	2.133	2.165	2.075
48	129.8	2.320	2.365	2.258
54	140.9	2.495	2.560	2.477
60	148.6	2.681	2.750	2.687

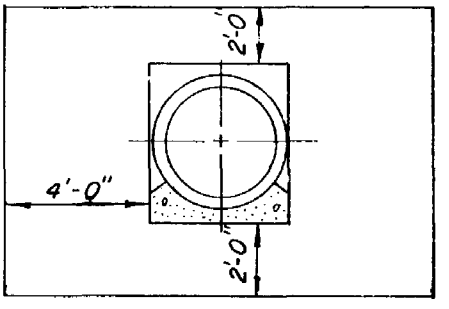

TABLE J-E9

QUANTITY SURVEY ANTI-SEEP COLLARS TYPE B1 BEDDING
FOR DAMS CLASS (a) LESS THAN 50 FEET HIGH
(per collar)

Conduit Inside Diameter	Reinforcing Steel	Type of Conduit		
		ASTM C-76 ASTM C-361 ASTM C-302 (f'_c=6000 psi)	AWWA C-300 AWWA C-302 (f'_c=4500 psi)	AWWA C-301
		Concrete Volume		
inch	lb	cu yd	cu yd	cu yd
12	46.55	0.888	--	--
15	48.29	0.949	--	--
16	47.87	0.975	--	0.929
18	51.35	1.008	--	0.972
20	52.61	1.069	1.101	1.022
21	57.39	1.067	--	--
24	59.06	1.160	1.203	1.149
27	61.12	1.215	1.246	--
30	61.98	1.301	1.334	1.279
33	70.11	1.361	1.396	--
36	71.09	1.437	1.49	1.408
42	80.19	1.615	1.650	1.564
48	83.95	1.772	1.814	1.728
54	93.74	1.933	1.944	1.910
60	97.64	2.103	2.152	2.078

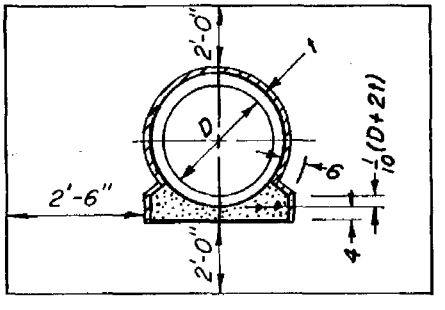

TABLE J-F1

QUANTITY SURVEY PWD BASIN

Structure Size	Conduit Inside Diameter	Reinforcing Steel	Type of Pipe		
			ASTM C-76 AWWA C-302	AWWA C-300 AWWA C-301 1/	Welded Steel & CMP
			Concrete Volume		
	inch	lb	cu yd	cu yd	cu yd
A	8	54	--	--	0.73
B	10	76	--	--	1.01
	12	76	.99	--	1.01
C	12	148	1.94	--	1.96
	15	148	1.93	--	1.95
	18	148	1.92	1.91	1.94
D	18	274	3.67	3.67	3.70
	20	274	--	3.65	3.68
	21	274	3.65	--	3.67
	24	274	3.63	3.63	3.66
	27	274	3.61	--	3.64
E	30	447	7.32	7.31	7.36
	33	447	7.30	--	7.34
	36	447	7.26	7.24	7.31
F	36	742	14.78	14.79	14.86
	42	742	14.72	14.70	14.82
	48	742	14.62	14.60	14.75
G	48	2364	25.72	25.69	25.88
	54	2364	25.60	25.56	25.80
	60	2364	25.41	25.41	25.70
H	60	3373	40.73	40.73	40.99
	66	3373	40.56	40.56	40.86
	72	3373	40.36	40.36	40.72

1/ AWWA C-301 ordinarily not available in diameters less than 42".

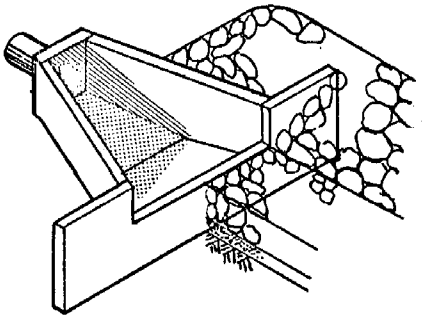

TABLE J-F2

QUANTITY SURVEY IMPACT BASIN *

Structure Size	Conduit Inside Diameter	Reinforcing Steel	Type of Pipe		
			ASTM C-76 AWWA C-302	AWWA C-300 AWWA C-301	Welded Steel & CMP
			Concrete Vol.		
	in.	lb	cu yd	cu yd	cu yd
B	12	348	3.82	--	3.34
	15	"	3.79	--	3.82
	18	"	3.76	--	3.80
	21	"	3.71	3.75 **	3.77
C	15	481	6.26	--	6.29
	16	""	--	6.28	6.28
	18	"	6.22	6.21	6.26
	20	"	--	6.18	6.24
	21	"	6.18	--	6.23
	24	"	6.13	6.12	6.20
	27	"	6.08	--	6.16
D	18	607	8.89	8.88	8.95
	20	"	--	8.84	8.91
	21	"	8.85	--	8.90
	24	"	8.80	8.76	8.86
	27	"	8.75	--	8.82
	30	"	8.69	8.66	8.78
E	21	946	11.30	--	11.36
	24	"	11.25	11.21	11.32
	27	"	11.20	--	11.28
	30	"	11.14	11.10	11.23
	33	"	11.08	--	11.18
	36	"	11.00	10.96	11.12
F	24	2374	19.21	19.17	19.29
	27	"	19.15	--	19.24
	30	"	19.08	19.04	19.19
	33	"	19.01	--	19.13
	36	"	18.93	18.88	19.07
	42	"	18.73	18.68	18.92
	48	"	18.51	18.45	18.76

TO BE REPLACED

* Minimum wing wall length.

** Prestressed (AWWA C301) pipe only.

TABLE J-F2 (continued)

Structure Size	Conduit Inside Diameter	Reinforcing Steel	Type of Pipe		
			ASTM C-76 AWWA C-302	AWWA C-300 AWWA C-301	Welded Steel & CMP
			Concrete Vol.		
	in.	lb	cu yd	cu yd	cu yd
G	27	2944	23.72	--	23.81
	30	"	23.65	23.61	23.75
	33	"	23.57	--	23.63
	36	"	23.49	23.45	23.63
	42	"	23.29	23.24	23.49
	48	"	23.07	23.01	23.32
	54	"	22.83	22.75	23.13
H	36	5920	39.56	39.51	39.71
	39	"	39.45	--	39.63
	42	"	39.34	39.29	39.55
	48	"	39.09	39.03	39.47
	54	"	--	38.74	39.26
	60	"	--	38.41	39.06
I	42	8755	68.45	68.39	68.68
	48	"	68.20	68.13	68.48
	54	"	67.82	67.82	68.26
	60	"	67.48	67.48	68.02
	66	"	67.10	67.10	67.75
	72	"	66.68	66.68	67.45

TO BE REPLACED