GATED OUTLET APPURTENANCES EARTH DAMS

TECHNICAL RELEASE NO. 46

UNITED STATES DEPARTMENT of AGRICULTURE
SOIL CONSERVATION SERVICE
ENGINEERING DIVISION

UNITED STATES
DEPARTMENT OF AGRICULTURE
SOIL CONSERVATION SERVICE
Regional Technical Service Center
Engineering & Watershed Planning Unit
Portland, Oregon

This manual has been prepared to assist the design engineer in development of plans for gated outlet appurtenances associated with small earth dams. The original and resourceful charts provide both ready solution to design and show the full range of compatible alternatives in related design details. The basic design philosophy, criteria and procedure are presented in the accompanying narrative.

Judicious use of both design charts and standard construction details will offer opportunity for a marked improvement in the quality of most plans and an equally significant reduction in time required for their preparation.

Harry W. Firman, Design Engineer, is responsible for the concepts and content of this manual. Robert Morland prepared the chapter, Hydraulic Controls. Valuable counsel and assistance were provided by Frank Muceus, Design Section Head, and other staff members.

June 1969

PRINCIPAL FEATURES of an EARTH DAM

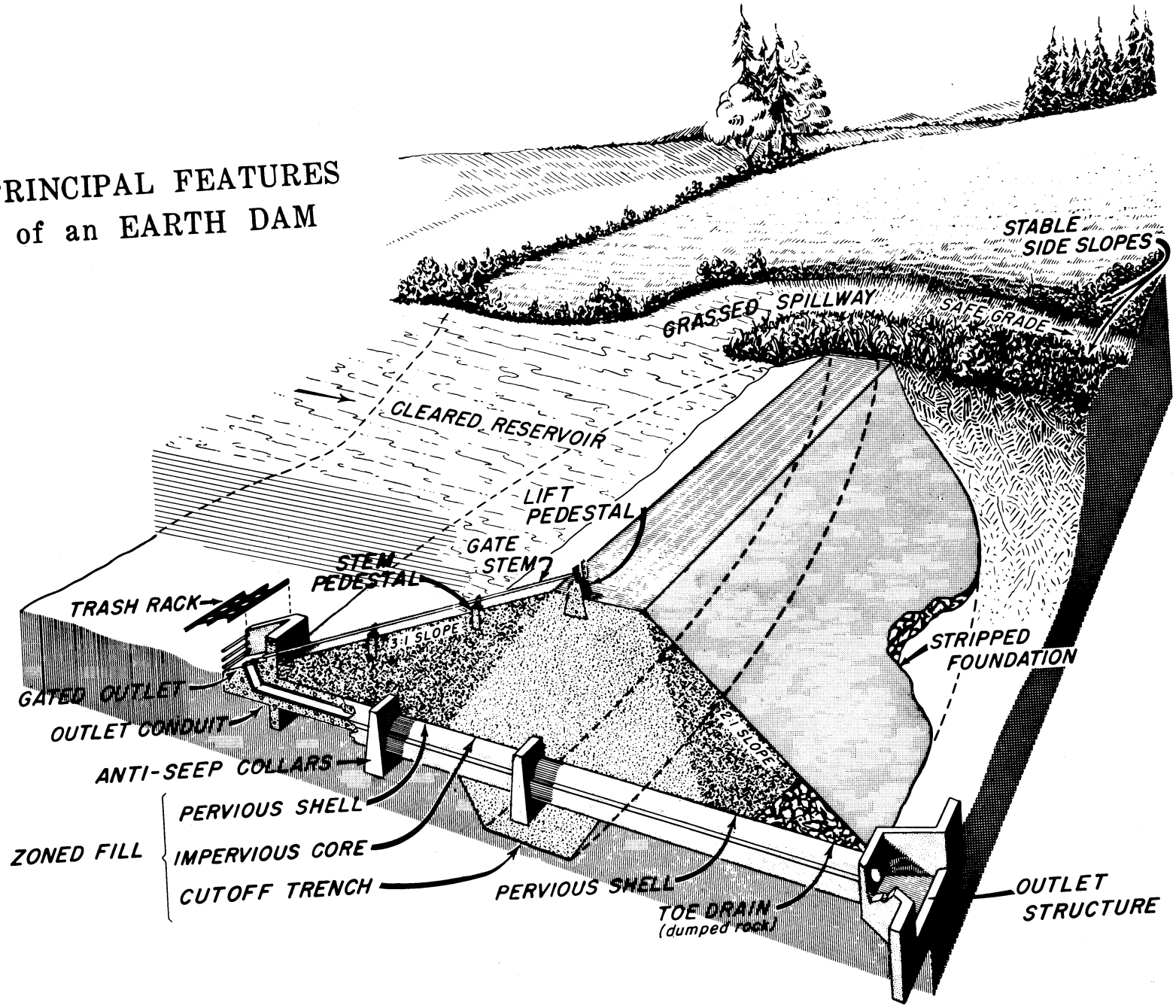

TABLE OF CONTENTS

FRONTISPIECE

Section

A - INTRODUCTION

B - HYDRAULICS

C - INLET STRUCTURE

D - CONTROLS

E - CONDUITS

F - OUTLET STRUCTURES

G - MISCELLANEOUS STRUCTURES

H - DRAWING LAYOUT AND SUMMARY

I - BIBLIOGRAPHY

J - APPENDIX

SECTION A - INTRODUCTION

Contents

Page

General A-1

Figures

A-1 Standard-Equivalent Dam A-3

A-2 Procedure Flowchart A-5

SECTION A - INTRODUCTION

This design manual contains procedure, design aids, standard details and drawings, useful for developing construction drawings for gated outlets and appurtenances common to earth dams used for storage of water for irrigation.

As the cover graphically indicates, the planner needs only the basic data to enter this guide and come out with essentially the completed drawings for the outlet appurtenances.

Design aids in the form of nomographs, charts and tables have been developed wherever possible to provide ready solution of design analyses. Examples have been placed on each of the more complex charts and nomographs to facilitate their use and help the designer grasp the relationship between dependent variables in identifying most alternatives.

Some of the figures may appear complicated and require some study of the example to understand the relationships expressed. Once master of a chart, the designer has a comprehensive understanding and perspective of the relationship between elements attainable in no other way.

Each section of the manual is presented in adequate detail for treatment of its specific subject in design of small irrigation storage structures. An example is continued through the manual. As each section is finished, the progressive example is completed to include the system components discussed in that section.

The hydraulics section is a general treatment of hydraulic design of gated outlet systems. It is in adequate detail for preliminary design purposes and in many cases satisfactory for final design. Refined analysis is recommended where critical design factors and cost alternatives are involved.

Discussion of hydraulic systems for operation of control gates on earth dam conduits is presented in detail since the application is somewhat unique. The hydraulic system offers advantages under certain conditions over the mechanical gate stem control that makes it worth consideration.

The importance of proper conduit design and installation cannot be overstressed to insure safety of the structure. It is usually impractical if not impossible to repair deficiencies in conduits through embankments; this unit of the system must be done right the first time. Every item presented in this section deserves careful consideration.

Outlet structures for stilling high velocity flows from conduits have taken a variety of forms depending on physical and economic factors of the site and structure. Performance characteristics, general site

adaptability and economic consideration to facilitate judgment in decision between alternate choices is presented. The several design charts eliminate many steps and hours of work for quantity and cost estimating.

Perhaps the most time saving operation in this manual is the summary sheet and procedure for preparing construction drawings. This concluding step opens the door to the several alternatives and considerations in composing a set of construction drawings for gated outlet appurtenances for earth dams.

Clarity of construction plans that present the design decisions made in preceding sections of the manual is important. Neatness, legibility and clarity in plans create a psychological response in the builder conducive to better quality work than the response to poorly drafted and vaguely presented details. The ideas offered permit maximum clarity and minimum effort to make a professional presentation of plans, consistent with the quality of design and helpful to both builder and construction engineer in getting a good job done.

It is beyond the scope of this manual to evaluate storage requirements and downstream water needs. In this respect each installation is unique and cannot be standardized. Embankment analysis has also been omitted as a subject requiring individual attention.

The concept of the STANDARD DAM for purposes of hydraulic design is a basic embankment shape and a full reservoir discharging at the toe of the dam through a conduit. As used in this manual, the cross section of the standard dam consists of an upstream slope of 3:1, a top width * of $2\sqrt{H} + 5$ feet, and a downstream slope of 2:1. The standardized inlet, stem pedestal and lift pedestal are detailed for the 3:1 slope. Hydraulic losses are based on a conduit length associated with the described embankment profile, full reservoir, and a free outfall. Some of the design charts and details are based on this configuration and are not applicable where these conditions are not met. Specific charts where these conditions apply are: Figures B-1, 2, 3, 4; C-4, 5; F-1, 2, 3, 4, 11. If the conduit is extended beyond the toe of the dam, the outlet is submerged or the reservoir only partially full, the hydraulic system, using these figures, should be sized using an EQUIVALENT DAM height. See Figure A-1. The equivalent dam has a fictitious height that makes it equivalent to the standard dam with respect to hydraulic operation.

An overall perspective of the manual content and use is presented in Figure A-2, Procedure Flow Chart. This chart follows the normal sequence in selection and development of the details of gated outlet appurtenances. It shows the major decisions that might affect alternate selection required at various points in the development.

* The difference between this top width compared with one based on $\frac{H + 35}{5}$ will have little effect on the preliminary hydraulic proportioning of the conduit.

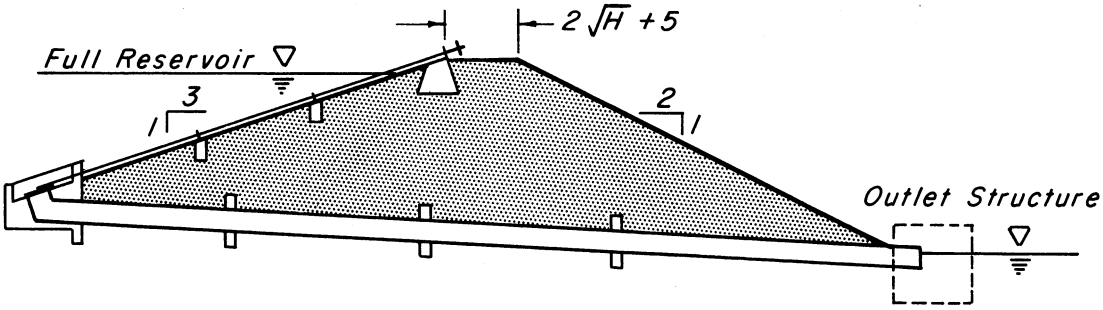

STANDARD DAM

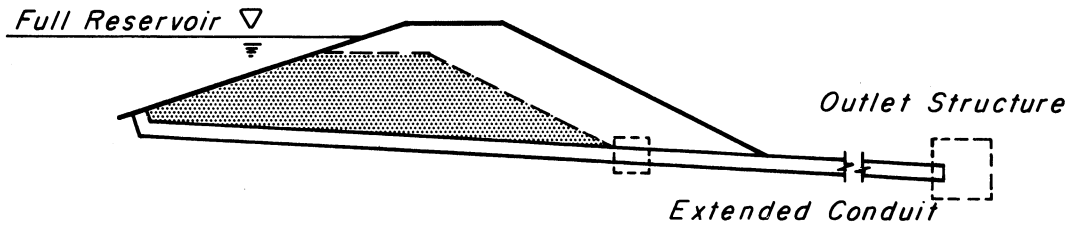

EQUIVALENT DAM

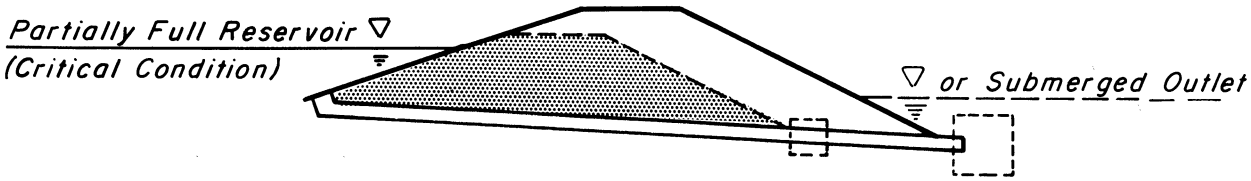

EQUIVALENT DAM

FIGURE A-1
STANDARD - EQUIVALENT DAM
EWP Unit Portland Oregon

FIGURE A-2

PROCEDURE FLOWCHART

EWP Unit Portland, Oregon

SECTION B - HYDRAULICS

Contents | Page

I. INTRODUCTION B-1

II. LOCATION OF CONTROL B-2

III. FULL PIPE FLOW B-2

IV. PARTIAL PIPE FLOW B-3

V. CAVITATION B-3

VI. USE OF CHARTS AND GRAPHS B-3

A. Full Pipe Flow With Gate Fully Open B-4

1. Figures B-1 through B-4 . . . . . B-4

2. Figures B-5 through B-10 . . . . . B-4

B. Partial Gate Opening B-5

1. Partial Pipe Flow, Figure B-11 . . . . . B-5

2. Full Pipe Flow, Figures B-12 through B-17 . . . B-5

VII. REVIEW B-7

VIII. EXAMPLE PROBLEM B-7

SECTION B - HYDRAULICS

Figures

		Page
B-1	Full Pipe Flow - Stage Discharge, n = 0.011 . . .	B-13
B-2	" " " " " n = 0.012 . . .	B-14
B-3	" " " " " n = 0.013 . . .	B-15
B-4	" " " " " n = 0.024 . . .	B-16
B-5	" " " - Entrance Loss Coefficient	B-17
B-6	Discharge for Full Pipe Flow n = 0.011 . . .	B-18
B-7	" " " " " n = 0.012 . . .	B-19
B-8	" " " " " n = 0.012 . . .	B-20
B-9	" " " " " n = 0.013 . . .	B-21
B-10	" " " " " n = 0.024 . . .	B-22
B-11	Free Discharge Through Partially Open Gates . . .	B-23
B-12	Gate Headloss Coefficient (Kg) Full Pipe Flow . .	B-25
B-13	Head Loss Coefficients for Circular and Square Conduits Flowing Full	B-26
B-14	Discharge of Circular Pipe Flowing Full, n = 0.011	B-27
B-15	" " " " " " n = 0.013	B-28
B-16	" " " " " " n = 0.015	B-29
B-17	" " " " " " n = 0.025	B-30

SECTION B - HYDRAULICS

I. INTRODUCTION

Selecting the proper gate and outlet conduit size, in many cases, will be based on a head that is less than that with a full reservoir. This results when the water needs are less at the beginning of a season at the time the reservoir is full. As the reservoir level drops, the water requirements can increase. Obviously the gate and conduit system should be designed for this critical discharge-head relation. For less critical conditions, the system would be operated with the gate partially closed.

Less obvious, however, is the possibility that the system may be operated with full head at full gate opening exceeding design discharge. This condition will be the critical one for certain outlet structures and can materially add to the cost of the system. Whether or not the outlet is sized for design discharge or maximum discharge requires judgment with the greater capacity recommended.

The minimum diameter of the outlet conduit may be set by Service and individual state requirements and varies from no restriction to 30 inches. An outlet conduit diameter of not less than 6 inches, preferably 10 inches, is recommended. Minimum diameter may also be established by the length of time it takes to dewater a reservoir by gravity flow. Recommended flow duration at full gate opening should not exceed 10 days.

Factors that determine the flow in a gated outlet include variables as the size, shape and type of control gate and conduit used, the slope, length and roughness of the conduit, the inlet and outlet conditions and the head on the system. The combined effect of any of these factors may determine the flow in the system.

The nomographs and charts in this section were prepared to provide the engineer with the hydraulic relationships commonly encountered in the design of small gated outlets.

The discussion of "Location of Control", "Full Pipe Flow" and "Partial Pipe Flow" is a simplification of actual conditions, in some cases to a point that can be misleading to the unwary.

Many problems are associated with the calculation of water surface profiles in a circular cross-section on a fixed grade line. The major ones are:

(1) The effect of air entrainment and consequent bulking of the flow,

(2) Determination of energy loss for the bulked flow and its variable "n" value,

(3) Effect of pipe joints, elbows, gates, etc.

(4) Geometry of the inlet for both partial and fully open conditions as well as accuracy in evaluating the tailwater elevation,

(5) The certainty that the conduit, on a compressible foundation, is subject to joint rotation and elongation that make the grade line of the conduit indeterminate.

The rest of the hydraulics section should be read keeping in mind that inlet control means partial pipe flow and outlet control means full pipe flow.

II. LOCATION OF CONTROL

Location of the control from the hydraulic standpoint dictates whether the conduit flows full or partly full and thereby establishes the head-discharge relationship. Slope of the pipe and the tailwater level are factors that determine location of the control. The slope may be mild or steep, that is, it may be flatter or steeper than the slope at which a given discharge will just support flow at a critical stage. For either a mild or steep slope, the control may shift from inlet to outlet depending on the head, tailwater, and gate opening.

For partial pipe flow, the control is normally at the inlet where orifice conditions control the discharge. For full pipe flow the control is at the outlet, and the total head on the system is determined by the elevation of the tailwater. In the case of free outfall at the outlet, the tailwater elevation is considered the center of the pipe outlet.

III. FULL PIPE FLOW

Full pipe flow usually occurs in long conduits with a mild or flat slope or where the outlet is submerged. The depth of water at the entrance must be greater than 1.2 times the inside diameter of the pipe to produce full pipe flow. Partial pipe flow may occur with the inlet submerged if the slope is steep or if the pipe is short enough so that a hydraulic jump does not occur in the length of the pipe and air is admitted through the outlet or by means of a vent. Full pipe flow conditions control for nearly all gate openings if the conduit is on a mild slope.

IV. PARTIAL PIPE FLOW

Partial pipe flow usually occurs in short conduits with sharp corners or inward projecting entrance and low heads. Partial pipe flow may also occur where the conduit is on a steep slope with partial gate openings and free outfall. In this case the inlet acts as an orifice to control the flow.

The inlet must be vented to have orifice control. The vent may be a vent-pipe or the airspace maintained above the water surface during partial pipe flow with free outfall and air admitted from the outlet.

If the conduit flows full at any point and the inlet is not vented, the high velocity flow will carry away entrapped air. The pressure in the pipe can then drop below atmospheric pressure and cause operation problems and structural damage.

V. CAVITATION

Localized constrictions, surface irregularities, and abrupt changes in alignment provide conditions for potential structural damage. This damage is caused by the successive formation and collapse of vapor pockets in low pressure areas associated with high velocity flow. The collapse of vapor pockets cause implosions that result in pitting of the concrete or the metal conduit surface. The pitting then accelerates the effect of cavitation by intensifying the negative pressures.

Several measures will reduce the potential for cavitation: streamlining of entrances and slots; increasing the cross-sectional area; or, introducing air by venting to the low pressure area.

Venting the conduit just downstream of the gate is recommended. Further discussion of vent pipes is presented in Section C, Inlets.

Conduits carrying flow with velocities in excess of 25 fps should be studied for cavitation potential.

VI. USE OF CHARTS AND GRAPHS

It should be recognized that these charts and graphs were developed for average conditions. Some of the relationships were derived from model studies. The curves or values may be an average of the results of these studies. Any deviation from the condition of the study could change the results; however, these relationships will give usable answers for most design

problems in small gated outlets. If exact values are required for a specific structure, detailed computations will be necessary to evaluate the exact conditions and requirements for that structure.

A. Full Pipe Flow With Gate Fully Open

1. Figures B-1 through B-4

Figures B-1 through B-4 were developed to quickly determine the pipe size and flow velocity for a given height of dam and discharge. THESE CHARTS APPLY TO FULL RESERVOIR CONDITIONS. For lower stages, chart discharges will be high and Figures B-6 through B-10 should be used. Each chart gives the relationships for a different conduit roughness (Manning's "n" value). They apply for an entrance condition of a fully open gate with square corners and a single miter bend. Energy loss is based on a pipe length for an embankment slope of 3:1 upstream and 2:1 downstream. The top width of the embankment is $2\sqrt{H}+5$ where H is the vertical distance from the spillway crest to gate centerline. A combined headloss coefficient of 1.24 was used for the entrance and elbow. The losses for these conditions are considered to be average for small dams with the head range shown on the charts.

The charts are entered with known values of head and discharge. The pipe diameter and velocity of flow are determined from the curves. If the point falls between two diameter lines, the larger diameter must be used to obtain the given discharge and velocity can be determined directly.

The most common pipe sizes for concrete and corrugated metal pipe were used in the construction of these charts. Relationships for other pipe sizes may be determined by interpolation.

2. Figures B-5 through B-10

Figures B-5 through B-10 give the relationships for full pipe flow with various entrance conditions and variable pipe lengths. THEY ARE FOR USE IN HYDRAULIC ANALYSIS WHERE THE RESERVOIR IS LESS THAN FULL OR WHERE THE PIPELINE EXTENDS BEYOND THE TOE OF THE DAM. They are also valid for the full reservoir stage although additional computation is required to find flow velocity. Figure B-5 is used to determine the loss coefficient (K_e) for various entrance types. Figures B-6 through B-10

present the relationships of head, length of pipe, and discharge for various entrance loss coefficients in nomograph form. These nomographs have been developed for four pipe roughness factors (Manning's "n" values) that apply to most installations. The difference between Figures B-7 and B-8 is the head range. Example solutions are shown on the nomographs.

Note that the entrance headloss coefficients (K_e) on Figure B-5 represent the loss for the entrance type, including any bends or corners connected with the inlet, as shown by each illustration. Headloss coefficients for partial gate openings are not included on this chart but may be obtained from Figure B-12.

B. Partial Gate Opening

1. Partial Pipe Flow, Figure B-11

Figure B-11 was developed to determine the flow characteristics at partial gate openings with partial pipe flow. This nomograph gives the relationships for orifice control at the inlet. However, partial pipe flow should be compared with the full pipe flow condition to determine which controls the discharge.

To determine if full or partial pipe flow controls, enter Figure B-11 with the given head, gate opening and gate size. The resulting discharge is then noted. For partial pipe flow to exist, this discharge must be less than the normal full pipe flow discharge that would occur with the particular pipe size and slope with free discharge. Calculations for this condition are described in Section 2 below.

2. Full Pipe Flow, Figures B-12 through B-17

The normal discharge for full pipe flow for a given pipe diameter and slope can be determined from Figures B-14 through B-17 (ES-54). If the full pipe flow determined from the above figures is less than the discharge as determined from Figure B-11, the conduit is flowing full and calculations must be made to determine the correct discharge.

The hydraulics of full pipe flow are based on these fundamental relationships:

a. $Q = AV$

b. $H = \frac{V^2}{2g} (1 + K_e + K_b + K_p\ell)$

From these the following equations are derived:

c. $C = \frac{1}{\sqrt{1 + K_e + K_b + K_p\ell}} = \frac{1}{\sqrt{\Sigma K}}$

d. $Q = 6.30\ CD^2\ H^{1/2}$

where

Q = discharge in cfs
D = inside diameter of conduit in feet
H = total head in feet (upstream water surface to tailwater surface or center of pipe at outlet for free outfall)
A = flow area, square feet
V = flow velocity, feet per second
ΣK = summation of headloss coefficients including K_e, entrance loss, K_g, gate loss, K_b, bend loss, $K_p\ell$, pipe friction loss, K_o, exit loss, and any other losses involved.

Headloss coefficients are related to the velocity in the conduit at full pipe flow. Note that the addition of a headloss coefficient for partial gate openings (K_g) will modify the headloss coefficient for the entrance (K_e) as shown in Figure B-5. Subtracting 0.5 from the value of K_e for the fully open gate results in a bend loss (K_b). Values for K_g and K_b replace the combined loss K_e used for the fully open gate.

The headloss coefficient (K_g) at various gate openings can be determined from Figure B-12. Gate loss coefficients for both circular leaf and square bottom gates with gate openings from 10 to 100 percent are included on this figure. The circular leaf is found on light duty gates while most heavy duty gates have straight bottom. Entrance headloss coefficients (K_e) can be determined from Figure B-5. Friction headloss coefficients (K_p) for various pipe sizes to be combined with the pipe length can be determined from Figure B-13.

The conduit exit headloss is considered to be equal to the headloss at a sudden infinite enlargement. The exit headloss coefficient is, therefore, considered to equal 1.0. For special conditions such as bends (other than those illustrated), enlargements or contraction, and refinement in hydraulic analysis refer to NEH, Section 5, Hydraulics.

VII. REVIEW

Before going into the selection and detailing of appurtenances, the overall hydraulic picture of the outlet system should be reviewed.

Recognizing that some water level other than full reservoir may be the controlling head for selecting conduit size, has the critical water level been determined? The system capacity is affected by the individual head losses:

(1) configuration of the inlet whether re-entrant or flush,
(2) bend, whether single or multiple miter,
(3) effect of the vent pipe on the system head,
(4) type of pipe-corrugated metal, monolithic concrete, or cylinder pipe, etc., as it effects the hydraulic roughness coefficient,
(5) pipe diameter, whether it is a stock size and available locally,
(6) the outlet, whether submerged or discharging freely at atmospheric pressure, etc.

VIII. EXAMPLE PROBLEM

The following example deals with the hydraulic design of an outlet for a small earthfill dam. It is assumed that the height, slopes and top width of the dam are known and the elevation of the conduit inlet and outlet are given. It is also assumed that the discharge requirements for the outlet have been determined from hydrologic data and downstream flow requirements.

<u>Given</u>:

An earthfill dam with the height and slopes, as shown in the following sketch will require an outlet conduit to satisfy the following:

1. Discharge 40 cfs at maximum reservoir level
2. Discharge 20 cfs at intermediate levels.
3. Discharge 15 cfs as base flow with water level at El 110.0.

A square bottom slide gate is to be used.

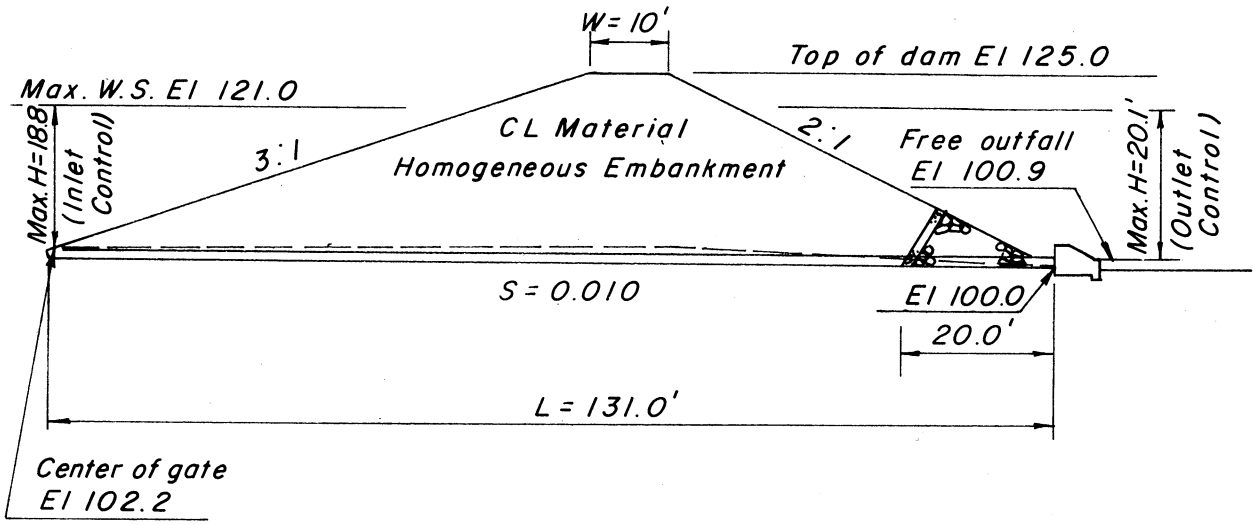

Determine:

Select the conduit size and associated gate openings to satisfy the listed conditions.

Problem Analysis:

1. Determine Manning's roughness coefficient "n" for several types of conduits available, or to be considered.

2. Find conduit diameter required to carry required discharges for (a) full reservoir, and (b) partly empty reservoir.

3. Compare answer in 2 (a) and (b) above, determine critical condition and select conduit size.

4. Find gate opening required to limit discharge for noncritical head-conduit diameter relation.

5. Check availability of gate and conduit selected.

Solution:

1. Determine the diameters of several types of pipe to meet the discharge requirements (check local availability).

a. For maximum head maximum discharge, use Figures B-1 thru B-4. (These figures apply for the full reservoir condition.)

Enter each chart with Q = 40 cfs and H = 20 ft.

Find:	Steel pipe	(n = 0.011)	= 19.5", use 20" dia.
	Concrete pipe	(n = 0.013)	= 20.5", use 21" dia.
	CM pipe	(n = 0.024)	= 24" dia.

b. Find the diameter of pipe for 20 cfs at the minimum head. Figures B-5 thru B-10 should be used because the system head is less than that for full reservoir. These figures are entered with the following given data:

Entrance loss K_e = 1.24 from Figure B-5 or see diagram on appropriate Figures B-6 thru B-10.

Conduit length = 131 ft from problem sketch

Discharge Q = 20 cfs	) Operation
Head H = 9 ft (El 110.0 - 100.9)	) Requirements

Find:	Steel pipe	(n = 0.011)	= 17.7, use 18" dia.
	Concrete pipe	(n = 0.013)	= 18" dia.
	CM pipe	(n = 0.024)	= 21" dia.

2. From a comparison of the conduit diameters required for the two discharge conditions, it is obvious the critical discharge is for maximum head condition. To satisfy the site requirements, any one of the following will satisfy the discharge needs:

Steel pipe	20" diameter
Concrete pipe	21" "
CM pipe	24" "

Since the rest of the procedure is similar for all three pipe types, only the 21" diameter concrete pipe will be used to continue the example to completion.

3. Determine the gate opening to provide a discharge of 20 cfs with the reservoir at El 110.0.

For free outfall, the water surface at the outlet of the conduit is considered to be at the center of the pipe. The tailwater elevation for this example is, therefore, considered to be 100.9 ft. The head on the system with

the reservoir at the permanent pool elevation is 110.00 - 100.9 = 9.1 ft. The head on the conduit inlet is 110.00 - 102.2 = 7.8 ft.

Check for full pipe flow to see if this condition controls the discharge in the system.

Enter Figure B-15 for n = 0.013 with D = 21" and S = 0.010. Find Q = 16 cfs. Therefore, the pipe will flow full at 20 cfs (operation requirements) and Figure B-12 applies. To reduce the discharge, the gate will have to be partially closed. Approximate gate closure can be determined from the rearranged discharge equation from page B-6.

$$\Sigma K = \left[\frac{6.30\ D^2 H^{1/2}}{Q}\right]^2$$

Substituting known values of D, H and Q

$$\Sigma K = \left[\frac{6.30(1.75)^2(9.12)^{1/2}}{20}\right]^2 = 8.5$$

Also, knowing the following headloss coefficients,

Pipe friction (n = 0.013, d = 21", K_p = 0.0148) from Fig. B-13

$K_p \ell$ = (0.0148) 131 = 1.94

Bend, single miter (3:1 slope) from Fig. B-5

K_b = 1.24 - 0.5 = 0.74

Outlet, K_o = 1.00

Gate, K_g = K_g

Then the $\Sigma K = K_p \ell + K_b + K_o + K_g = 3.68 + K_g$

and $K_g = \Sigma K - (K_p \ell + K_b + K_o) = 8.5 - 3.68 = 4.82$

Enter Figure B-12 with this value of K_g and assume a square bottom gate leaf, find approximate gate opening of 48% for the 20 cfs at a head of 9.1 ft.

4. Determine the gate opening to provide 15 cfs discharge with the reservoir level at El 121.0 and also at El 110.0.

The head on the conduit inlet with the reservoir level at the maximum elevation is 121.0 - 102.2 = 18.8 ft.

With the reservoir at El 110.0, the head on the conduit inlet is 110.0 - 102.2 = 7.8 ft.

From the previous check for full pipe flow, it was determined that the normal full pipe flow at the given slope was 16 cfs. The pipe would, therefore, flow partly full for a discharge of 15 cfs provided that the outlet was not submerged. Figure B-11 is then used to determine the gate opening.

Enter the nomography with H = 18.8 ft and extend a line through Q = 15 cfs to the pivot line. The diameter of 1.75 is connected to the point on the pivot line and extended to find C_v = 0.175. For a square bottom slide-gate the opening corresponding to C_v = 0.175 is approximately 32 percent of the diameter.

This setting would provide the required base flow discharge of 15 cfs when the reservoir level was at the maximum elevation.

For H = 7.8 ft, Q = 15 cfs, and D = 1.75 ft, C_v was determined to be 0.27. For a square bottom gate, the gate opening was determined to be approximately 43 percent. This setting will allow the required base flow (discharge) of 15 cfs when the reservoir level is at El 110.0.

5. The 21 in. diameter pipe satisfies the functional requirements. A quick check of a gate catalogue shows a 21 in. gate available as a stock item for the system head. In the event a conduit is selected for which a stock size gate is not available, the next larger gate will be used. A short transition cast-in-place in the inlet structure is recommended for this situation.

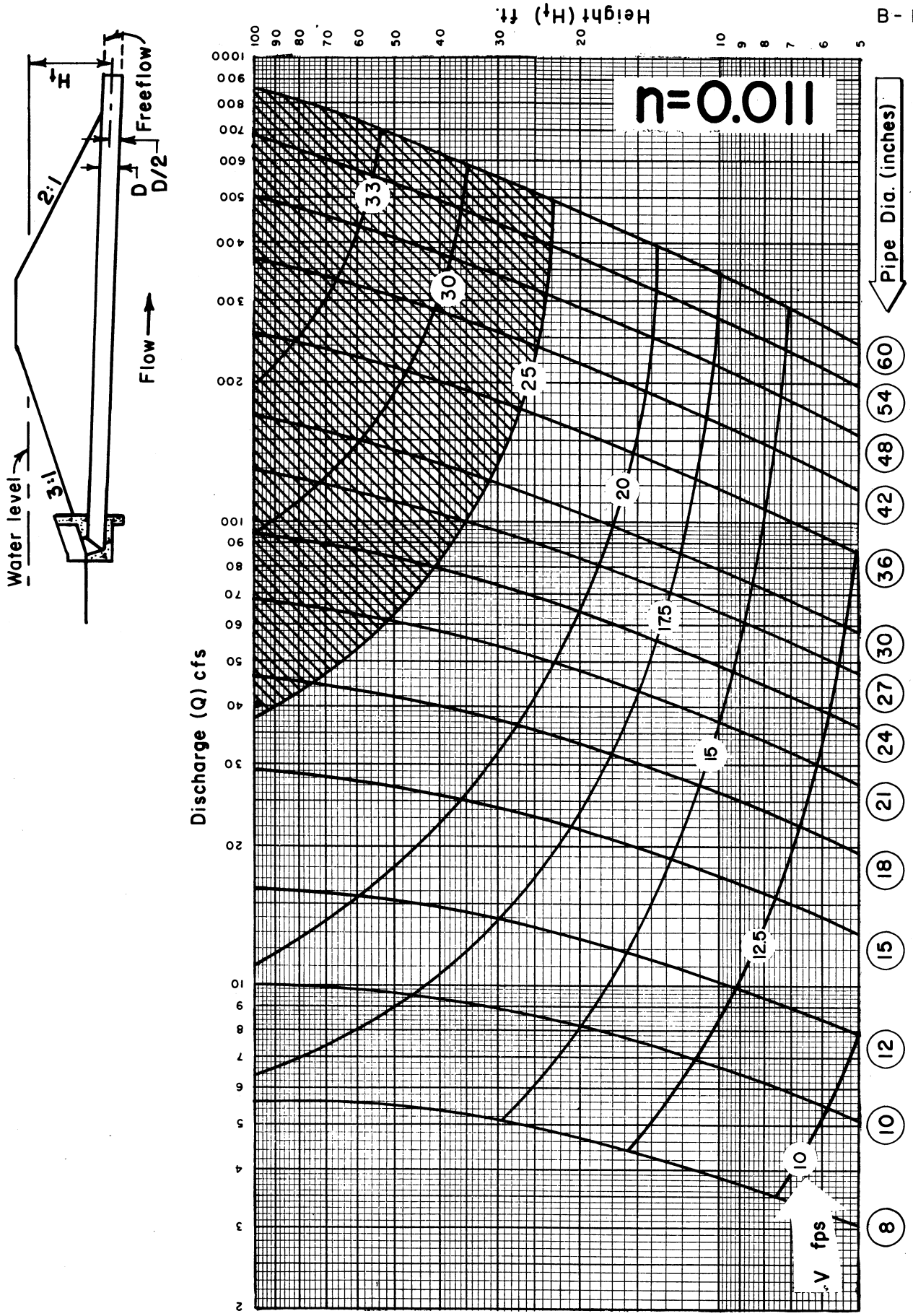

FIGURE B-1
FULL PIPE FLOW STAGE DISCHARGE
EWP Unit Portland, Oregon

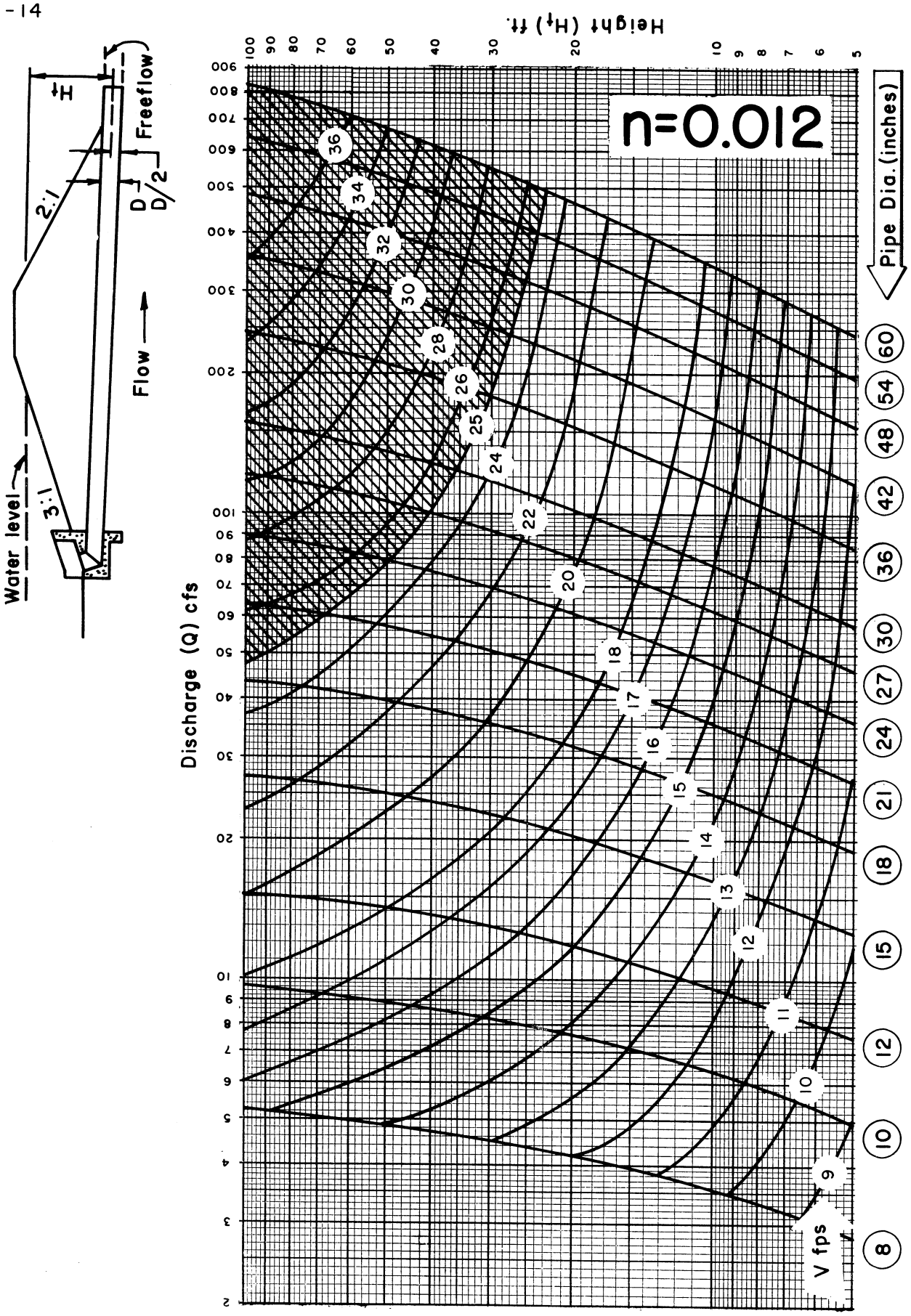

FIGURE B-2
FULL PIPE FLOW STAGE DISCHARGE
EWP Unit Portland, Oregon

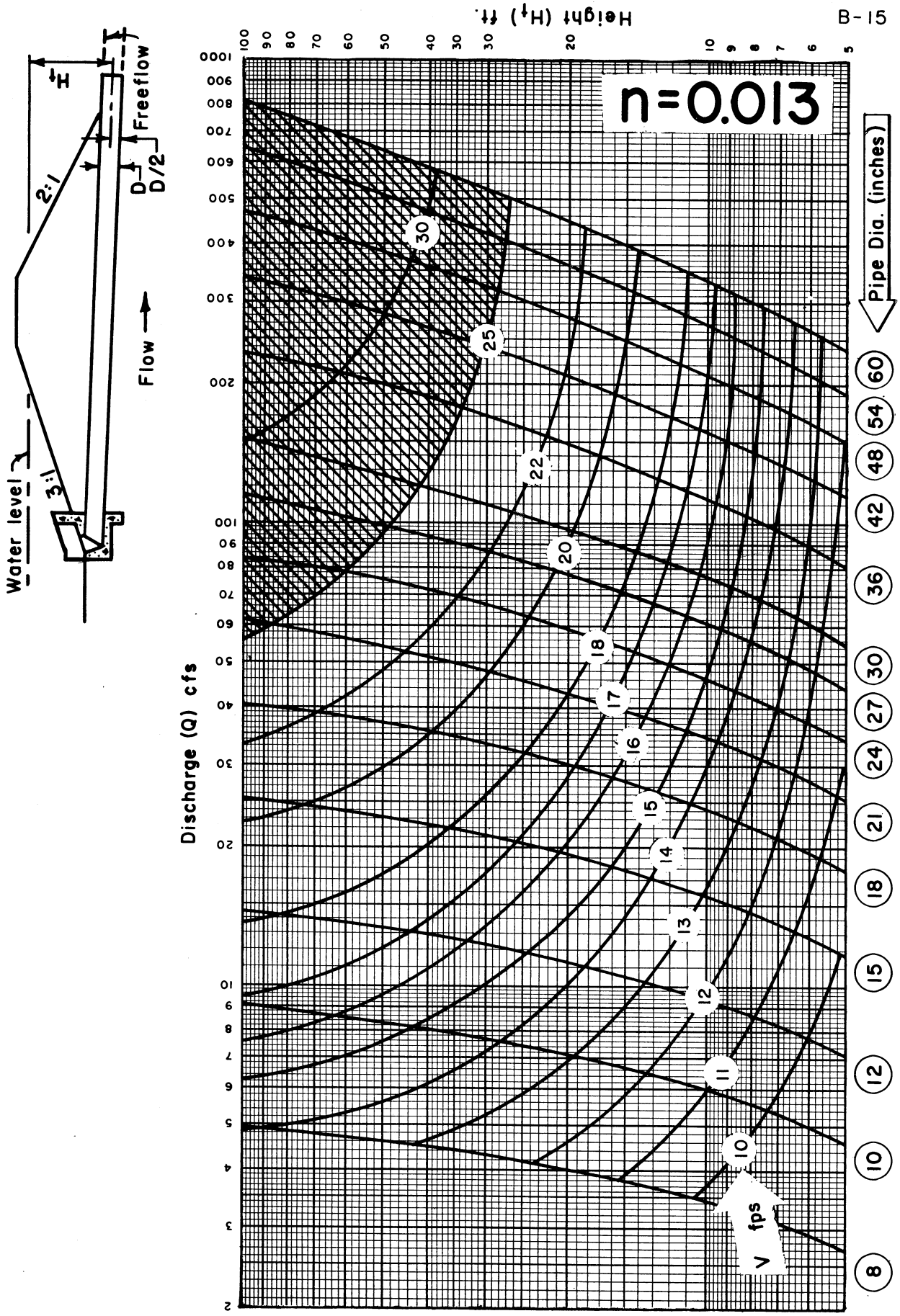

FIGURE B-3
FULL PIPE FLOW
STAGE DISCHARGE
EWP Unit Portland, Oregon

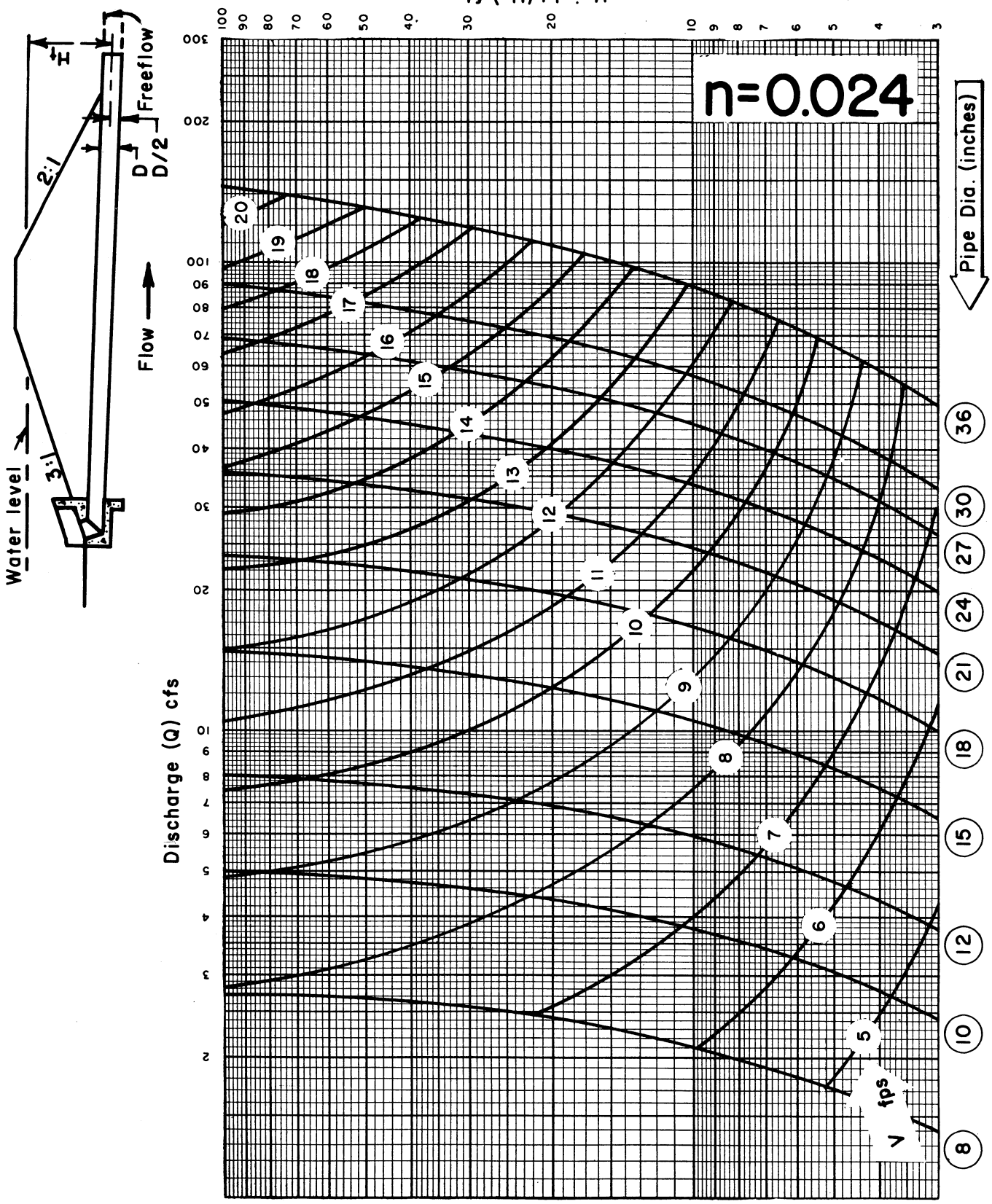

FIGURE B-4
FULL PIPE FLOW STAGE DISCHARGE
EWP Unit Portland, Oregon

Straight Inlet
Square Cornered

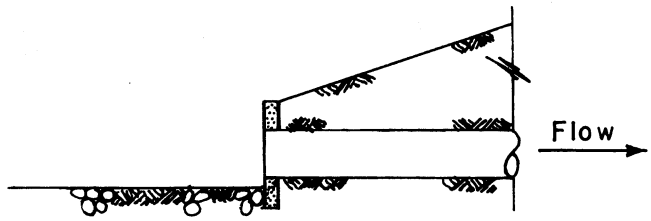

$K_e = 0.50$

Straight Inlet – Inward
Projecting – Square Cornered

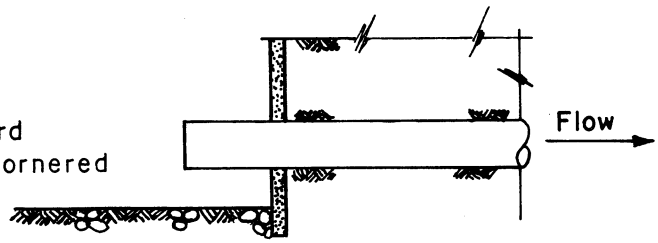

$K_e = 0.78$

Double Miter Bend
Square Corner

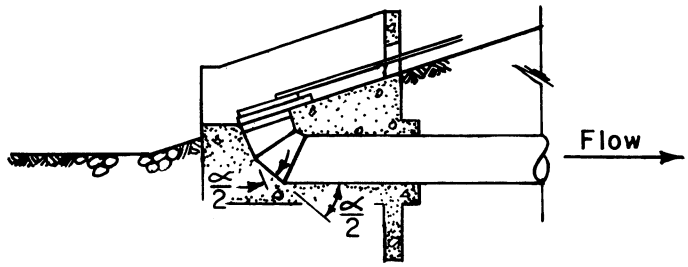

$K_e^* = 0.99$

Single Miter Bend
Square Corner

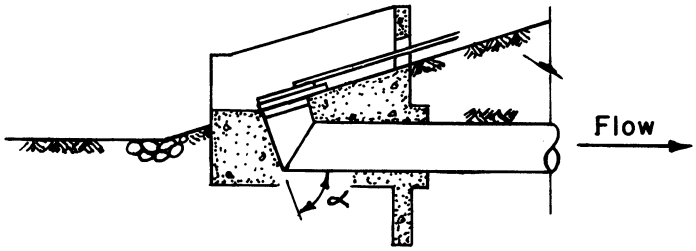

$K_e^* = 1.24$

SLOPE	α	K_e^*	
		Single	Double
2.5 : 1	69°	1.18	0.94
3 : 1	71°	1.20	0.98
3.5 : 1	74°	1.25	1.00
4 : 1	76°	1.29	1.02
	Ave.	1.24	0.99

K_e^* - Includes Bend Loss Coefficient
0.5 of the listed value is for the inlet, the remainder for the bend.
Trash rack losses are negligible for the standard inlet.

FIGURE B-5
FULL PIPE FLOW ENTRANCE LOSS COEFFICIENT
EWP Unit Portland, Oregon

n = 0.011

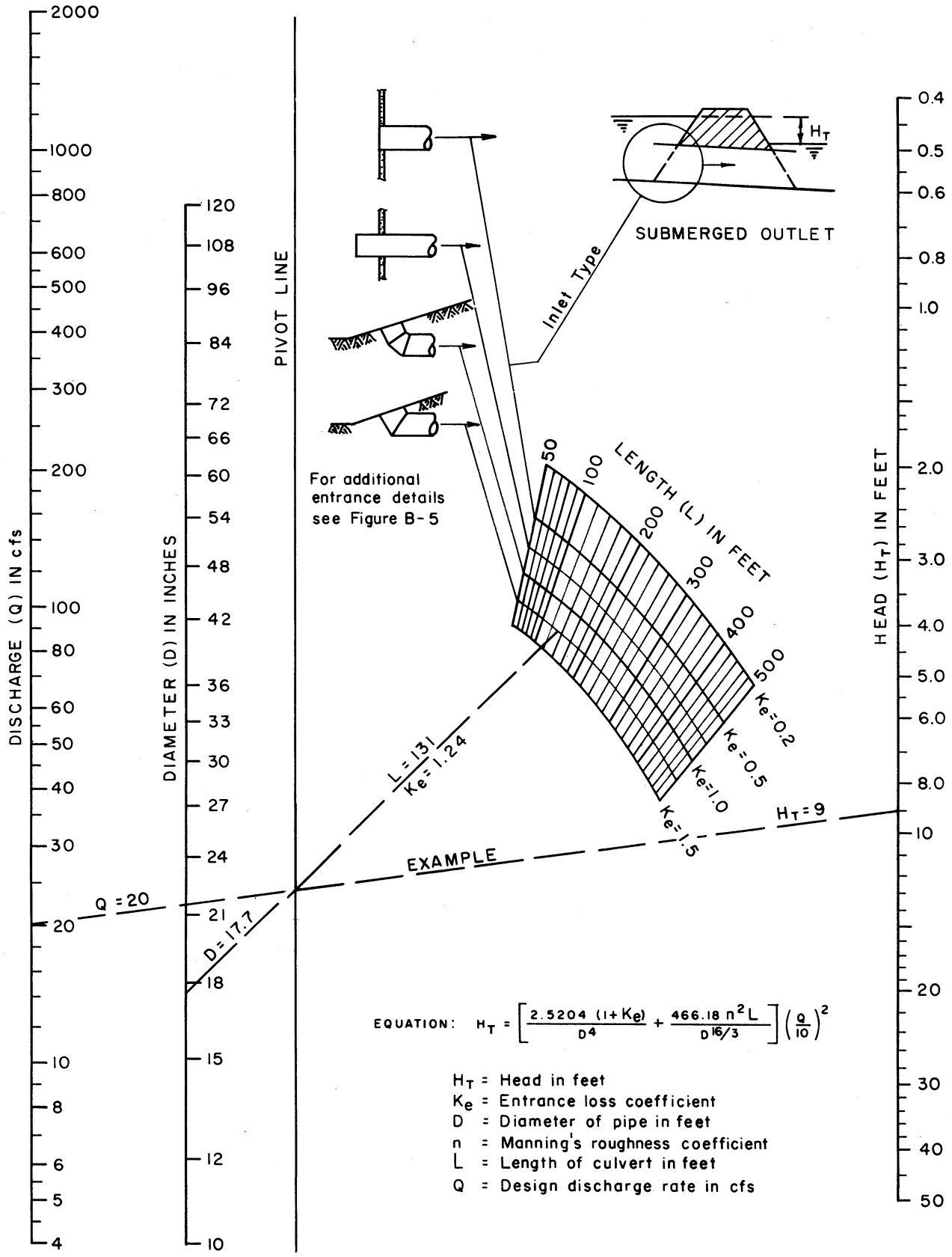

EQUATION: $H_T = \left[\frac{2.5204\,(1+K_e)}{D^4} + \frac{466.18\,n^2 L}{D^{16/3}}\right]\left(\frac{Q}{10}\right)^2$

H_T = Head in feet
K_e = Entrance loss coefficient
D = Diameter of pipe in feet
n = Manning's roughness coefficient
L = Length of culvert in feet
Q = Design discharge rate in cfs

REFERENCE
After Bureau of Public Roads Charts

FIGURE B-6
DISCHARGE FOR FULL PIPE FLOW n=0.011
EWP Unit Portland, Oregon

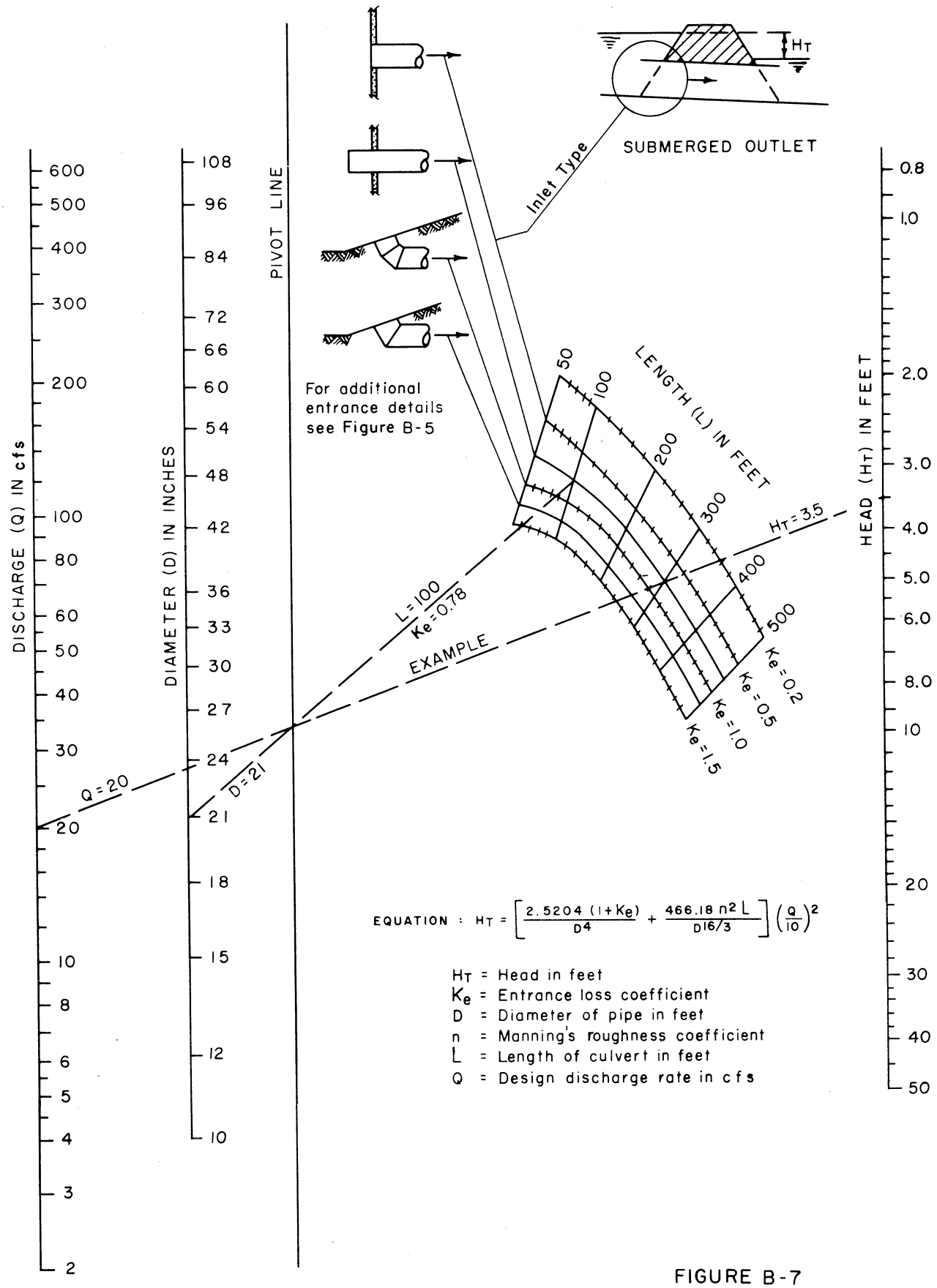

REFERENCE

After Bureau of Public Roads Charts

FIGURE B-7

DISCHARGE FOR FULL PIPE FLOW n = 0.012

EWP Unit Portland, Oregon

n = 0.012

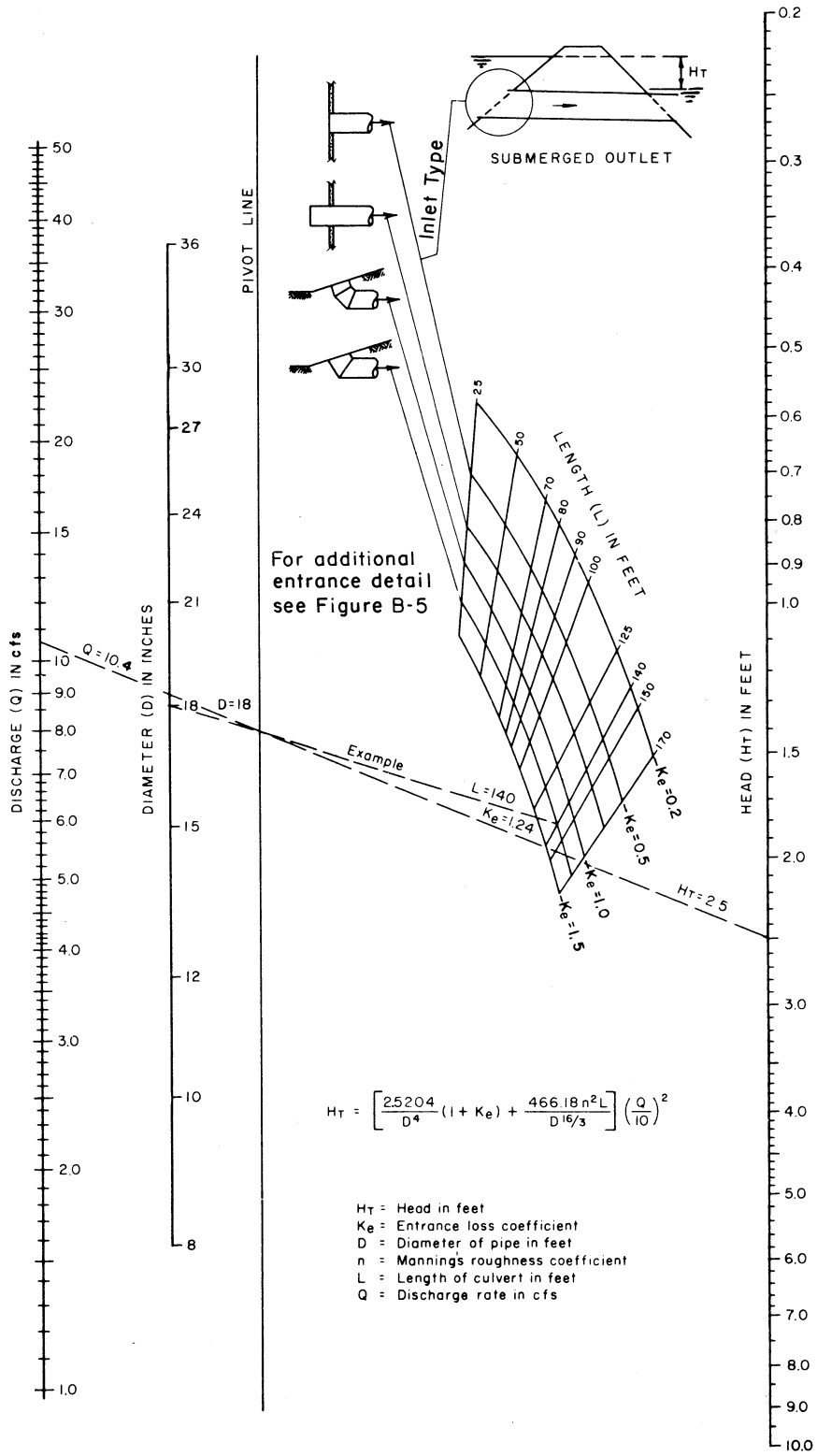

$$H_T = \left[\frac{2.5204}{D^4}(1 + K_e) + \frac{466.18\,n^2 L}{D^{16/3}}\right]\left(\frac{Q}{10}\right)^2$$

H_T = Head in feet
K_e = Entrance loss coefficient
D = Diameter of pipe in feet
n = Mannings's roughness coefficient
L = Length of culvert in feet
Q = Discharge rate in cfs

FIGURE B-8

DISCHARGE FOR FULL PIPE FLOW n=0.012

EWP Unit Portland, Oregon

REFERENCE

After Bureau of Public Roads Charts.

n = 0.013

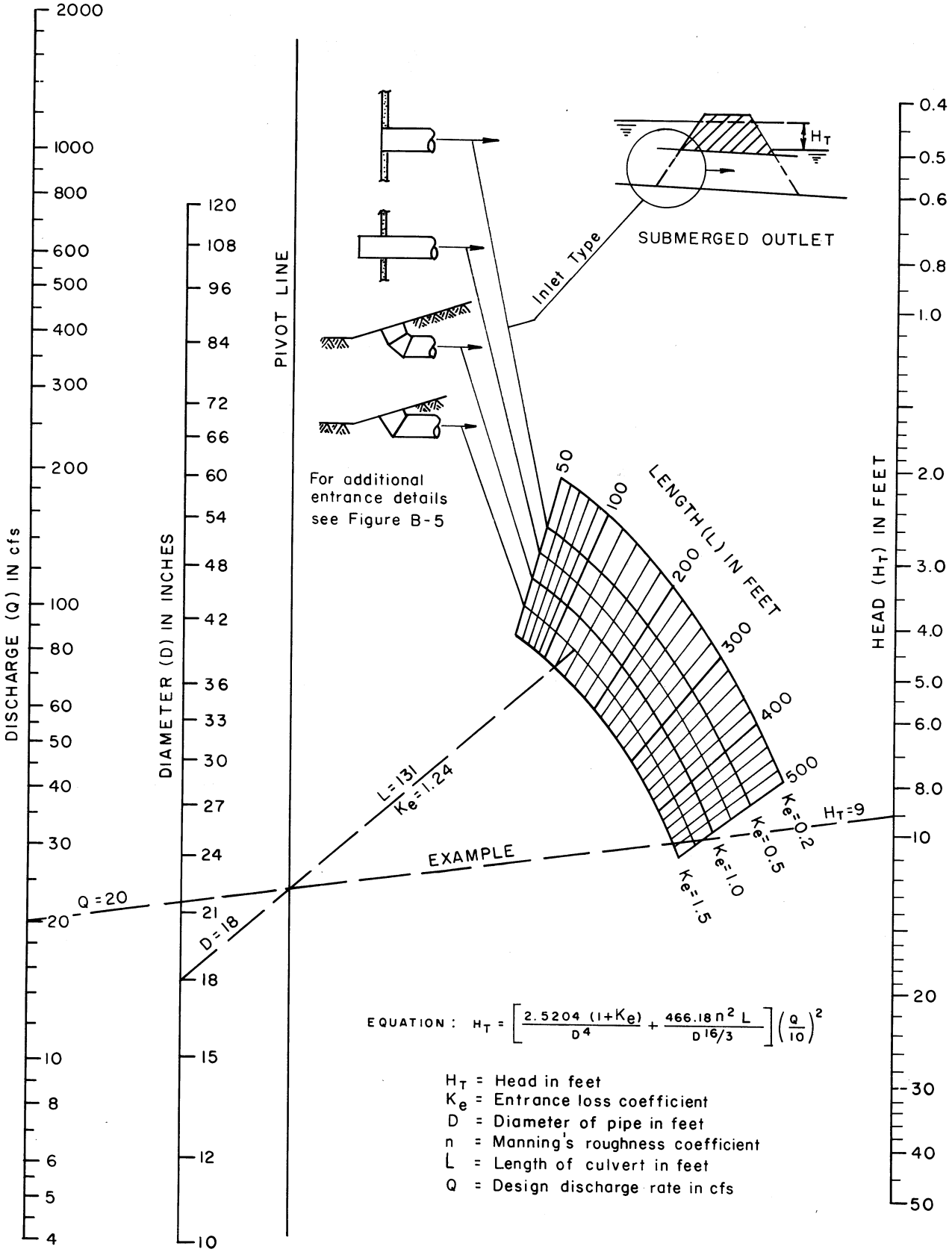

EQUATION: $H_T = \left[\frac{2.5204\,(1+K_e)}{D^4} + \frac{466.18\,n^2\,L}{D^{16/3}}\right]\left(\frac{Q}{10}\right)^2$

H_T = Head in feet
K_e = Entrance loss coefficient
D = Diameter of pipe in feet
n = Manning's roughness coefficient
L = Length of culvert in feet
Q = Design discharge rate in cfs

REFERENCE
After Bureau of Public Roads Charts

FIGURE B-9
DISCHARGE FOR FULL PIPE FLOW n=0.013
EWP Unit Portland, Oregon

n=0.024

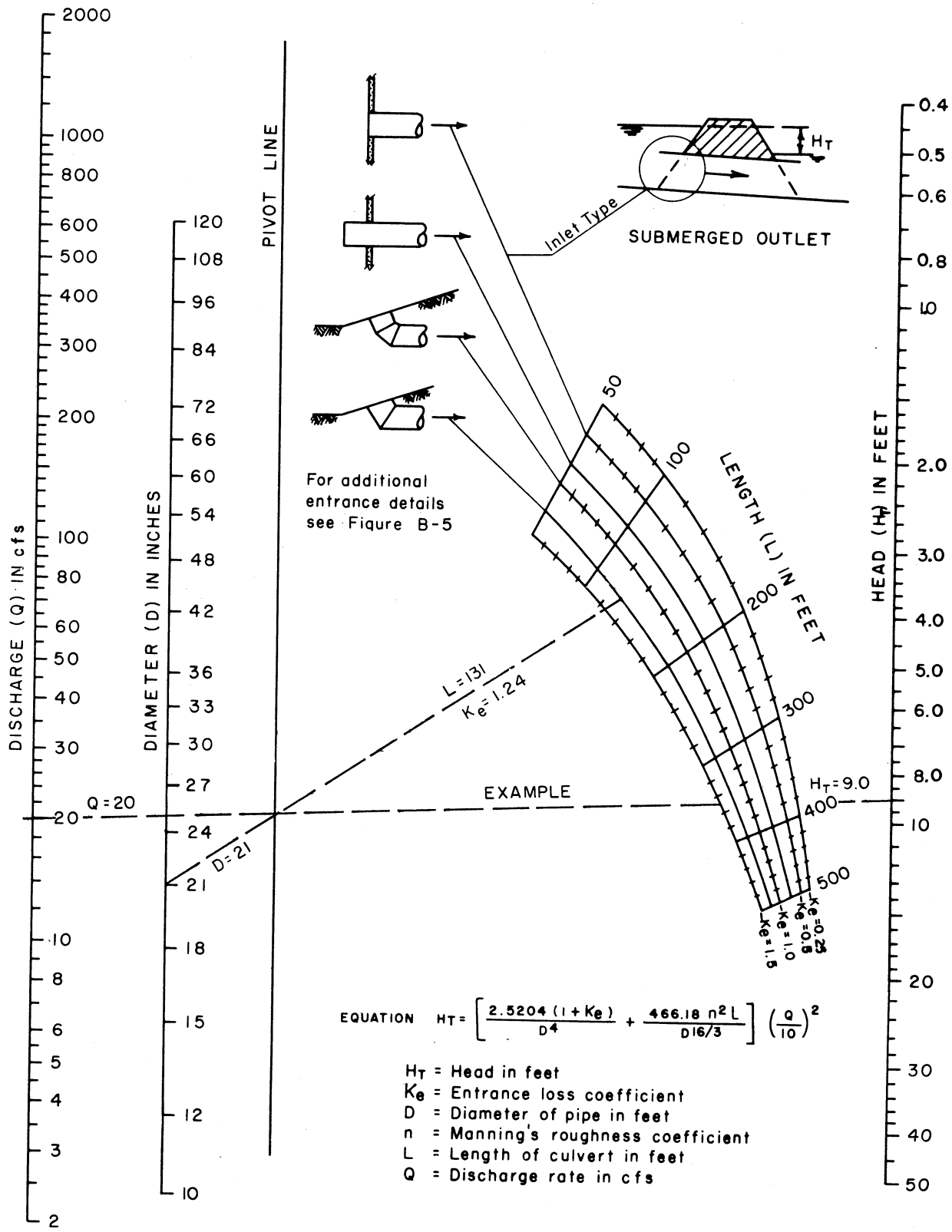

EQUATION $H_T = \left[\frac{2.5204(1+K_e)}{D^4} + \frac{466.18\, n^2 L}{D^{16/3}}\right]\left(\frac{Q}{10}\right)^2$

H_T = Head in feet
K_e = Entrance loss coefficient
D = Diameter of pipe in feet
n = Manning's roughness coefficient
L = Length of culvert in feet
Q = Discharge rate in cfs

REFERENCE
After Bureau of Public Roads Charts

FIGURE B-10

DISCHARGE FOR FULL PIPE FLOW n=0.024

EWP Unit Portland, Oregon

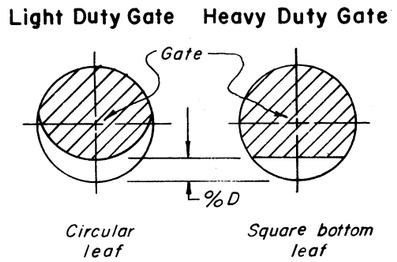

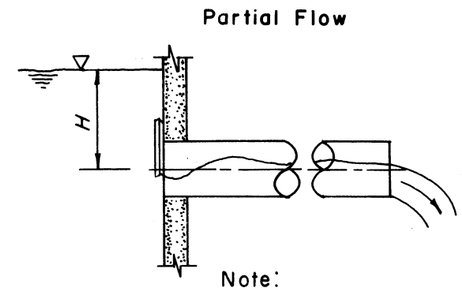

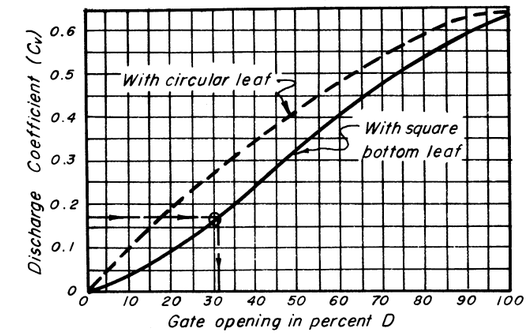

Note:

For fully open gates, full pipe flow, and embankment slopes of 3:1 and 2:1 refer to Figures B-1, B-2, B-3, B-4

For fully open gates and full pipe flow with a variety of entrances refer to Figures B-5, B-6, B-7, B-8, B-9, B-10

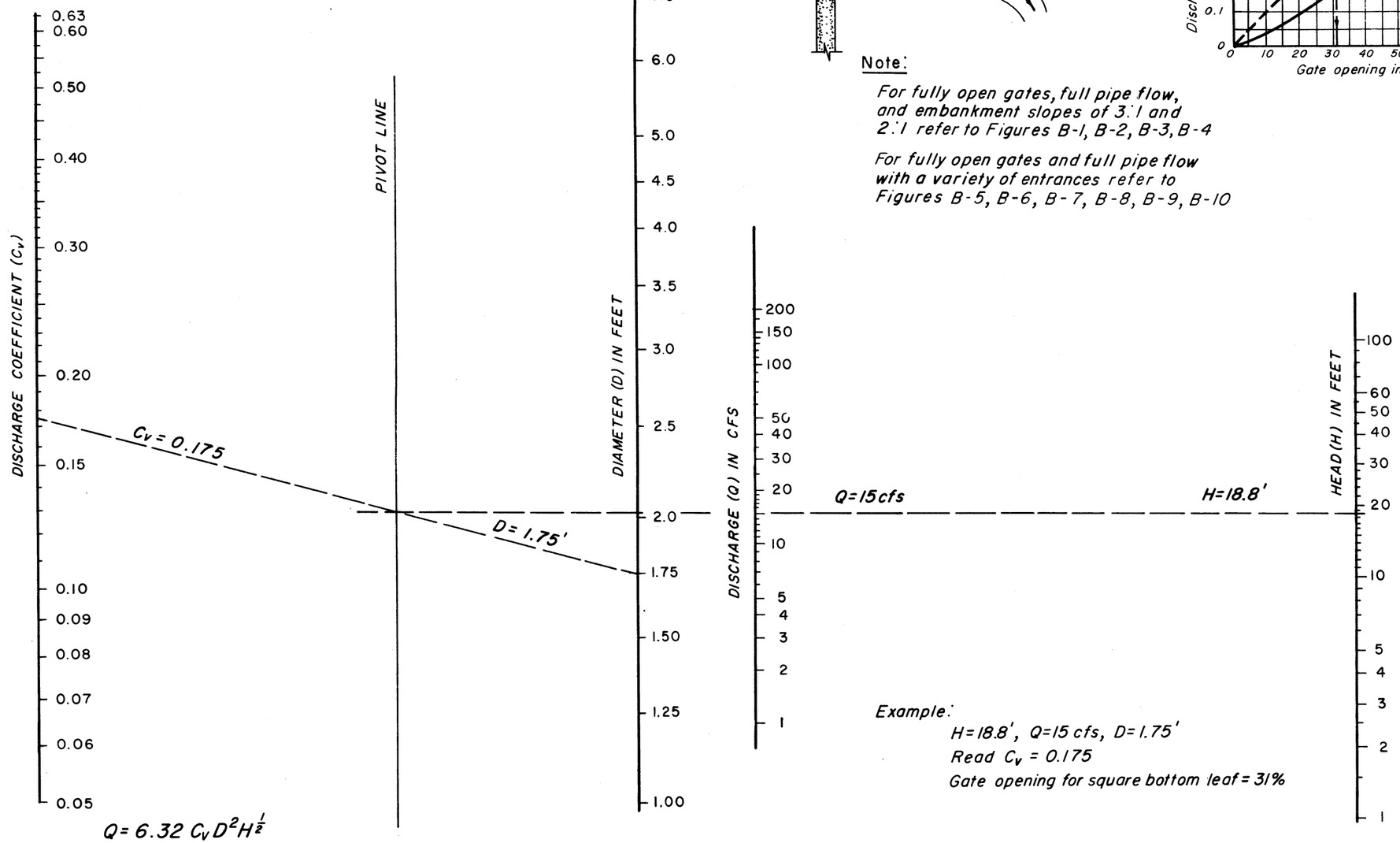

Example:

$H = 18.8'$, $Q = 15$ cfs, $D = 1.75'$

Read $C_v = 0.175$

Gate opening for square bottom leaf = 31%

$$Q = 6.32\, C_v D^2 H^{\frac{1}{2}}$$

Q = Design discharge rate in cfs

C_v = Gate discharge coefficient

D = Diameter of pipe in feet

H = Head in feet measured to center line of conduit

REFERENCE: Ball, J. W., "Limitations of Metergates," ASCE Journal of Irrigation and Drainage, Dec. 1962, p. 26, paper No. 3359.

FIGURE B-11

FREE DISCHARGE THRU PARTIALLY OPEN GATES

EWP Unit Portland, Oregon

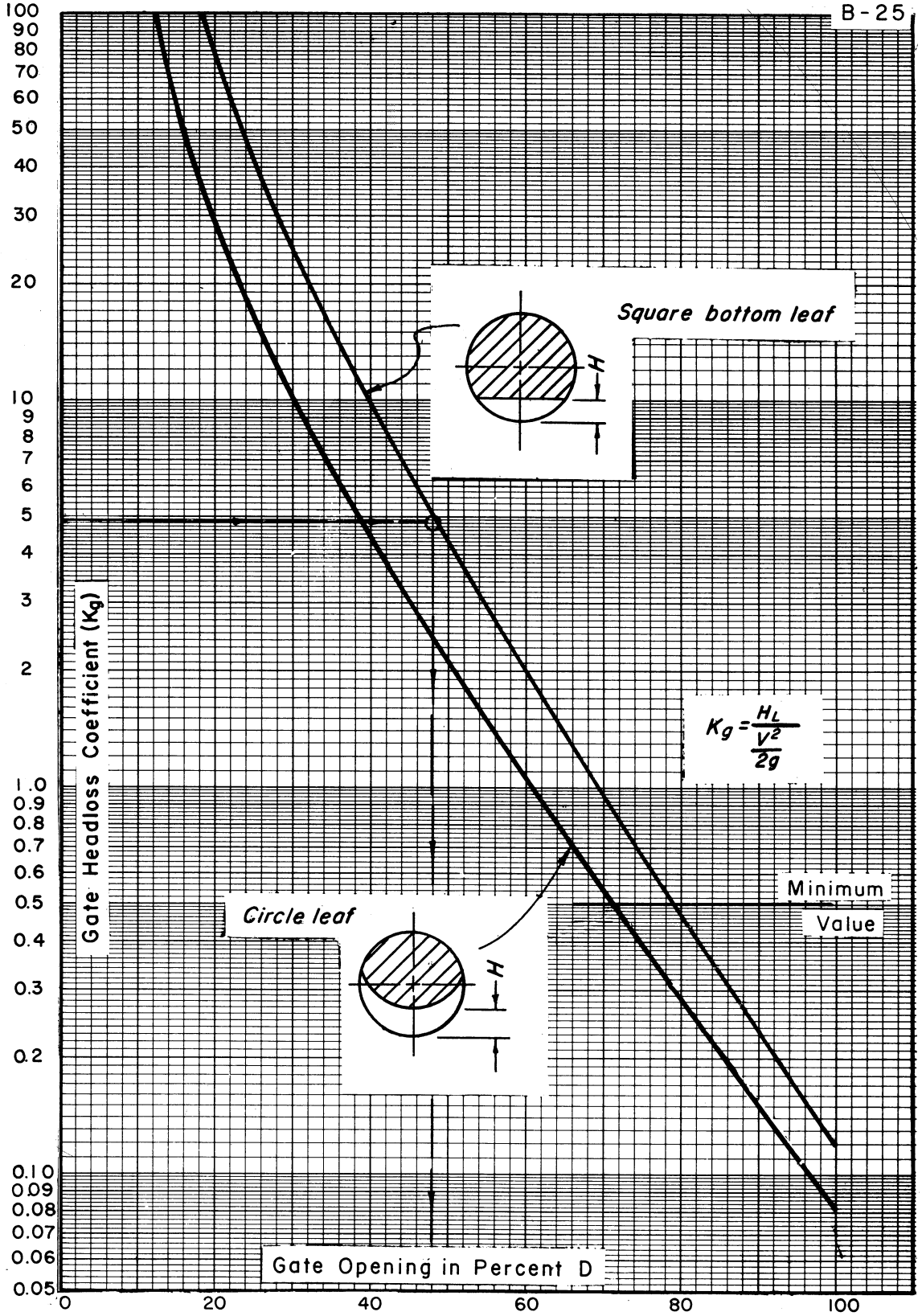

FIGURE B-12

GATE HEADLOSS COEFFICIENT (K_g) FULL PIPE FLOW

EWP Unit Portland, Oregon

REFERENCE:
W.E.S. Hyd. Chart 330-1

HEAD LOSS COEFFICIENT, K_p, FOR CIRCULAR PIPE FLOWING FULL $K_p = \frac{5087\,n^2}{D^{4/3}}$

Pipe diam. inches	Flow area sq. ft.	MANNING'S COEFFICIENT OF ROUGHNESS "n"															
		0.010	0.011	0.012	0.013	0.014	0.015	0.016	0.017	0.018	0.019	0.020	0.021	0.022	0.023	0.024	0.025
6	0.196	0.0467	0.0565	0.0672	0.0789	0.0914	0.1050	0.1194	0.1348	0.151	0.168	0.187	0.206	0.226	0.247	0.269	0.292
8	0.349	.0318	.0385	.0458	.0537	.0623	.0715	.0814	.0919	.1030	.1148	.1272	.140	.154	.168	.183	.199
10	0.545	.0236	.0286	.0340	.0399	.0463	.0531	.0604	.0682	.0765	.0852	.0944	.1041	.1143	.1249	.136	.148
12	0.785	.0185	.0224	.0267	.0313	.0363	.0417	.0474	.0535	.0600	.0668	.0741	.0817	.0896	.0980	.1067	.1157
14	1.069	.0151	.0182	.0217	.0255	.0295	.0339	.0386	.0436	.0488	.0544	.0603	.0665	.0730	.0798	.0868	.0942
15	1.23	.0138	.0166	.0198	.0232	.0270	.0309	.0352	.0397	.0446	.0496	.0550	.0606	.0666	.0727	.0792	.0859
16	1.40	.0126	.0153	.0182	.0213	.0247	.0284	.0323	.0365	.0409	.0455	.0505	.0556	.0611	.0667	.0727	.0789
18	1.77	.01078	.0130	.0155	.0182	.0211	.0243	.0276	.0312	.0349	.0389	.0431	.0476	.0522	.0570	.0621	.0674
21	2.41	.00878	.01062	.0126	.0148	.0172	.0198	.0225	.0254	.0284	.0317	.0351	.0387	.0425	.0464	.0506	.0549
24	3.14	.00735	.00889	.01058	.0124	.0144	.0165	.0188	.0212	.0238	.0265	.0294	.0324	.0356	.0389	.0423	.0459
27	3.98	.00628	.00760	.00904	.01061	.0123	.0141	.0161	.0181	.0203	.0227	.0251	.0277	.0304	.0332	.0362	.0393
30	4.91	.00546	.00660	.00786	.00922	.01070	.01228	.0140	.0158	.0177	.0197	.0218	.0241	.0264	.0289	.0314	.0341
36	7.07	.00428	.00518	.00616	.00723	.00839	.00963	.01096	.0124	.0139	.0154	.0171	.0189	.0207	.0226	.0246	.0267
42	9.62	.00348	.00422	.00502	.00589	.00683	.00784	.00892	.01007	.0129	.0126	.0139	.0154	.0169	.0184	.0201	.0218
48	12.57	.00292	.00353	.00420	.00493	.00572	.00656	.00747	.00843	.00945	.01053	.01166	.0129	.0141	.0154	.0168	.0182
54	15.90	.00249	.00302	.00359	.00421	.00488	.00561	.00638	.00720	.00808	.00900	.00997	.01099	.0121	.0132	.0144	.0156
60	19.63	.00217	.00262	.00312	.00366	.00424	.00487	.00554	.00626	.00702	.00782	.00866	.00955	.01048	.0115	.0125	.0135

HEAD LOSS COEFFICIENT, K_c, FOR SQUARE CONDUIT FLOWING FULL $K_c = \frac{29.16\,n^2}{r^{4/3}}$

Conduit Size feet	Flow area sq. ft.	MANNING'S COEFFICIENT OF ROUGHNESS "n"				
		0.012	0.013	0.014	0.015	0.016
2×2	4.00	0.01058	0.01242	0.01440	0.01653	0.01880
2½×2½	6.25	0.00786	0.00922	0.01070	0.01228	0.01397
3×3	9.00	.00616	.00723	.00839	.00963	.01096
3½×3½	12.25	.00502	.00589	.00683	.00784	.00892
4×4	16.00	.00420	.00493	.00572	.00656	.00746
4½×4½	20.25	.00359	.00421	.00488	.00561	.00638
5×5	25.00	.00312	.00366	.00425	.00487	.00554
5½×5½	30.25	.00275	.00322	.00374	.00429	.00488
6×6	36.00	.00245	.00287	.00333	.00382	.00435
6½×6½	42.25	.00220	.00258	.00299	.00343	.00391
7×7	49.00	.00199	.00234	.00271	.00311	.00354
7½×7½	56.25	.00182	.00213	.00247	.00284	.00323
8×8	64.00	.00167	.00196	.00227	.00260	.00296
8½×8½	72.25	.00154	.00180	.00209	.00240	.00273
9×9	81.00	.00142	.00167	.00194	.00223	.00253
9½×9½	90.25	.00133	.00156	.00180	.00207	.00236
10×10	100.00	.00124	.00145	.00168	.00193	.00220

$$H_1 = (K_p \text{ or } K_c)\, L\, \frac{v^2}{2g}$$

Nomenclature:

- a = Cross-sectional area of flow in sq. ft.
- D = Inside diameter of pipe in inches.
- g = Acceleration of gravity = 32.2 ft. per sec.
- H_1 = Loss of head in feet due to friction in length L.
- K_c = Head loss coefficient for square conduit flowing full.
- K_p = Head loss coefficient for circular pipe flowing full.
- L = Length of conduit in feet.
- n = Manning's coefficient of roughness.
- Q = Discharge or capacity in cu. ft. per sec.
- r = Hydraulic radius in feet.
- v = Mean velocity in ft. per sec.

Example 1: Compute the head loss in 300 ft. of 24 in. diam. concrete pipe flowing full and discharging 30 c.f.s. Assume n = 0.015

$$v = \frac{Q}{D} = \frac{30}{3.14} = 9.55 \text{ f.p.s.};\quad \frac{v^2}{2g} = \frac{(9.55)^2}{64.4} = 1.42 \text{ ft.}$$

$$H_1 = K_p L \frac{v^2}{2g} = 0.0165 \times 300 \times 1.42 = 7.03 \text{ ft.}$$

Example 2: Compute the discharge of a 250 ft., 3×3 square conduit flowing full if the loss of head is determined to be 2.25 ft. Assume n = 0.014.

$$H_1 = K_c L \frac{v^2}{2g};\quad \frac{v^2}{2g} = \frac{H_1}{K_c L} = \frac{2.25}{0.00839 \times 250} = 1.073 \text{ ft.}$$

$$v = \sqrt{64.4 \times 1.073} = 8.31;\quad Q = 9 \times 8.31 = 74.8 \text{ c.f.s.}$$

REFERENCE:
ES - 42

FIGURE B-13

HEAD LOSS COEFFICIENTS FOR CIRCULAR AND SQUARE CONDUITS FLOWING FULL

EWP Unit Portland, Oregon

n=0.011

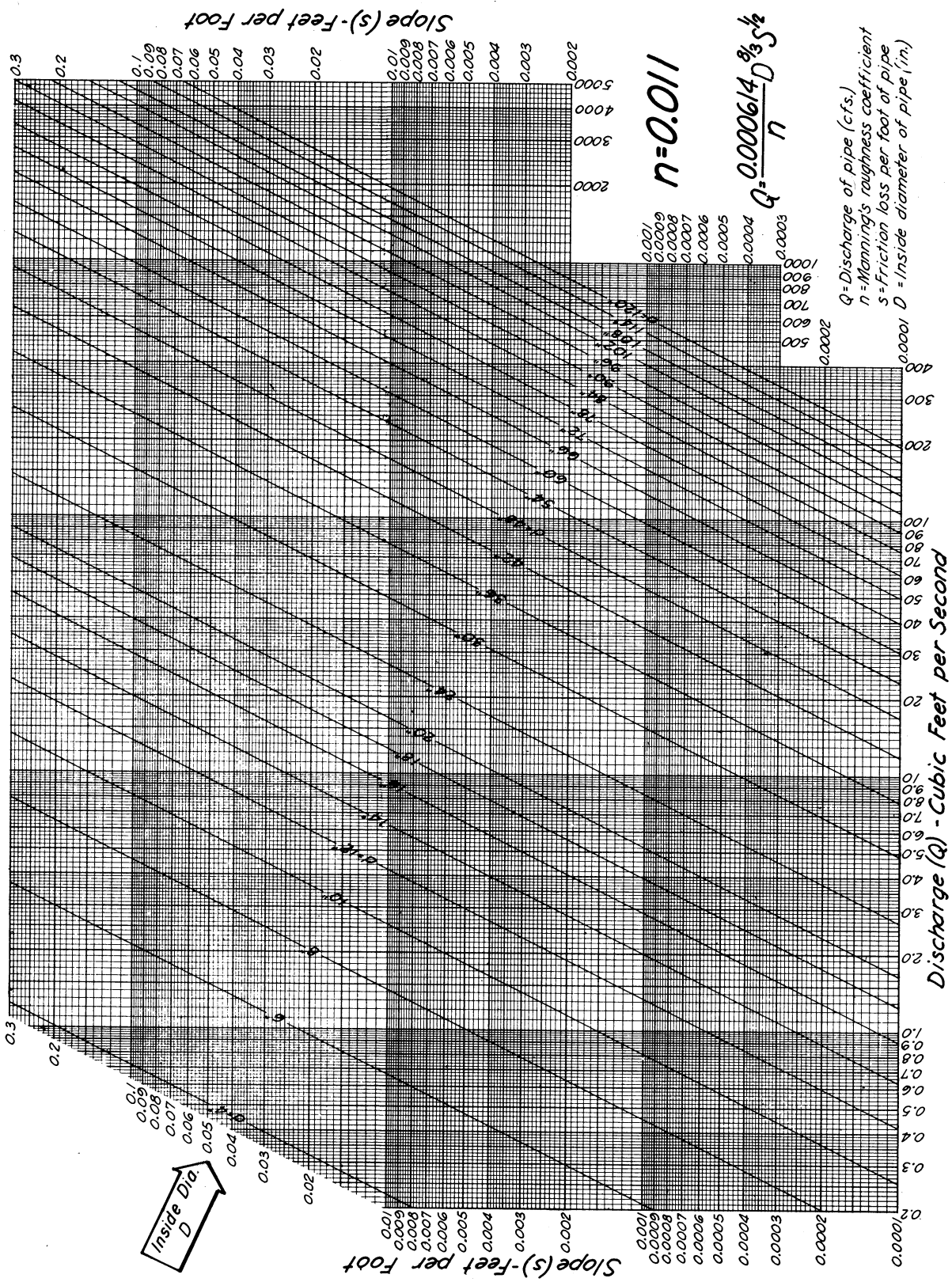

REFERENCE:
ES-54

FIGURE B-14
DISCHARGE OF CIRCULAR PIPE FLOWING FULL
FWP Unit Portland, Oregon

n=0.013

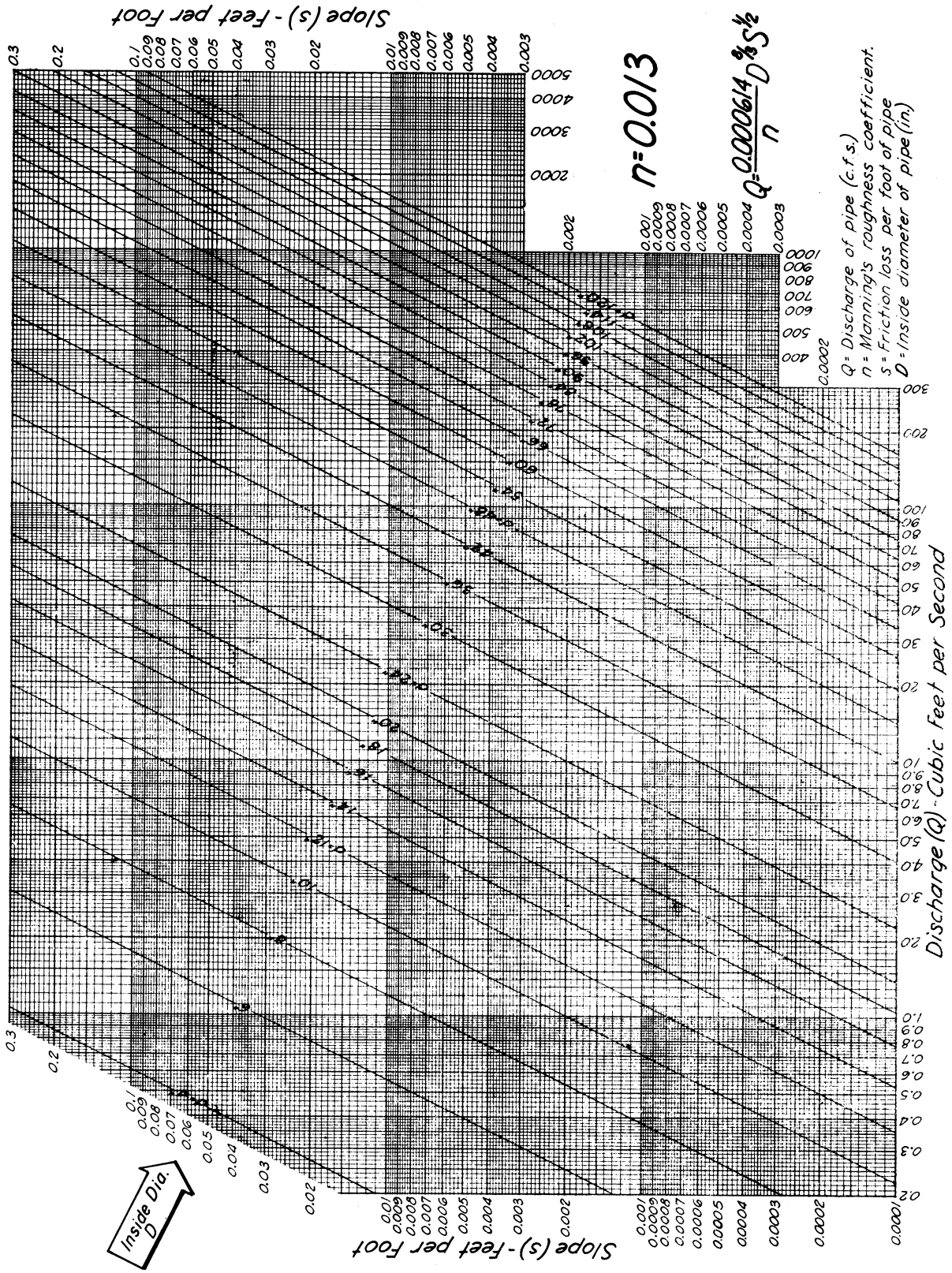

REFERENCE:
ES-54

FIGURE B-15
DISCHARGE OF CIRCULAR PIPE FLOWING FULL
EWP Unit Portland, Oregon

n = 0.015

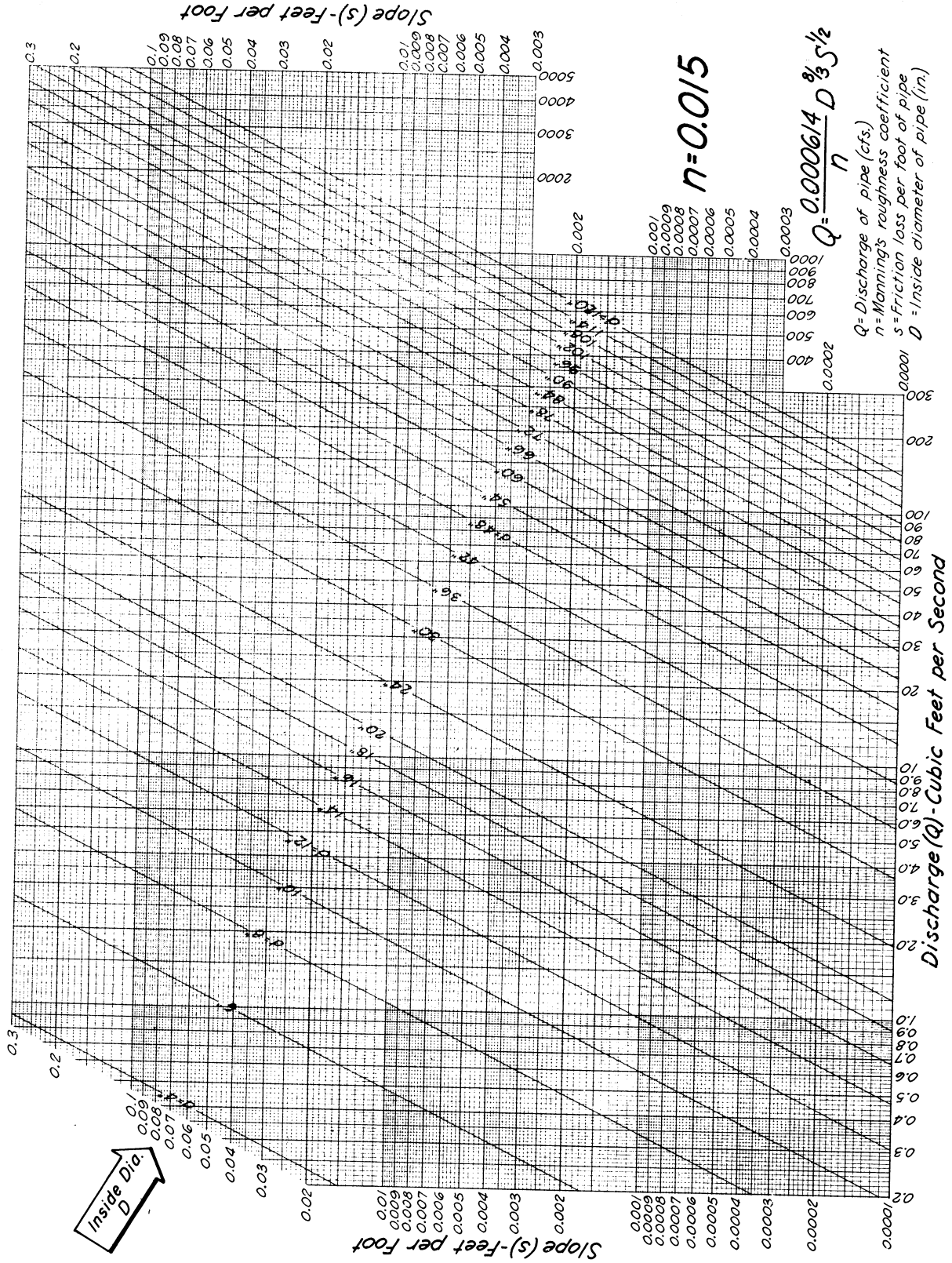

REFERENCE:
ES-54

FIGURE B-16
DISCHARGE OF CIRCULAR PIPE FLOWING FULL
EWP Unit Portland, Oregon

n=0.025

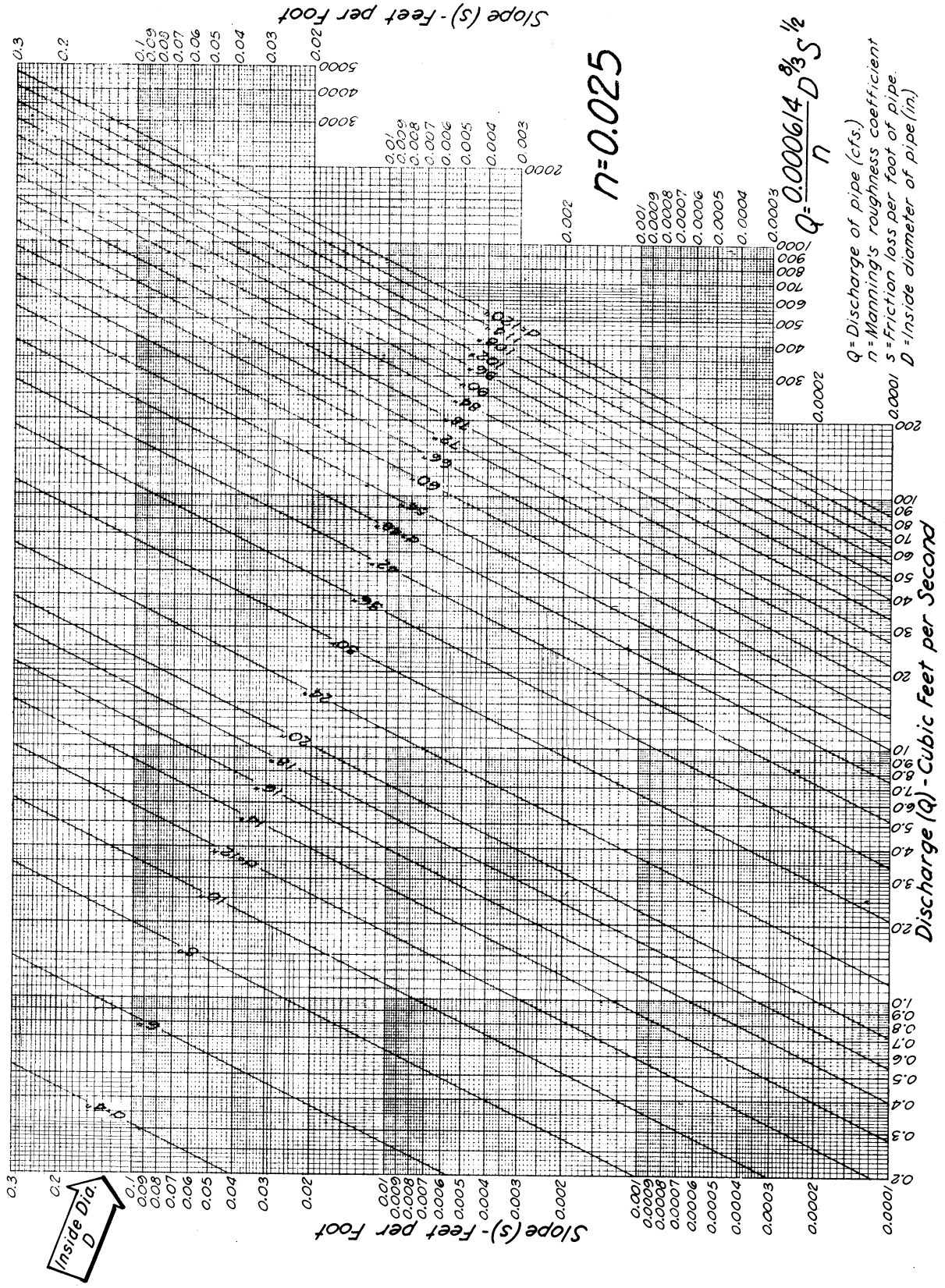

REFERENCE:
ES-54

FIGURE B-17
DISCHARGE OF CIRCULAR PIPE FLOWING FULL
EWP Unit Portland, Oregon

SECTION C - INLET STRUCTURE

Contents

		Page
I.	INTRODUCTION	C-1
II.	GENERAL CRITERIA	C-1
III.	NOMENCLATURE AND GENERAL NOTES	C-1
IV.	STANDARD INLET	C-2
	A. Structure Size	C-2
	B. Trash Rack	C-3
	C. Inlet Protection	C-3
V.	VENT PIPE	C-3
VI.	QUANTITY SURVEY	C-4
VII.	EXAMPLE	C-4

Figures

C-1	Nomenclature - Water Control Gates	C-7
C-2	Inlet Structure	C-9
C-3	Alternate Trash Rack	C-11
C-4	Inlet Protection	C-13
C-5	Vent Pipe Diameter	C-14

SECTION C - INLET STRUCTURE

I. INTRODUCTION

Innumerable varieties of inlet structures are designed individually for essentially the same conditions and requirements. The standard structure in this section has evolved over a period of years and incorporates details based on experience gained from a number of installations. This structure is for use with a 3:1 upstream embankment slope.

Two trash rack systems are given: one, more suitable for low head installation, and the other for higher heads where portions of the rack may need to be removed for maintenance without the use of heavy duty lifting equipment.

A single miter elbow has been selected in preference to a multiple miter. Savings in head due to the improved hydraulics of the multiple miter elbow does not justify the additional cost of fabrication.

II. GENERAL CRITERIA

The standard inlet was designed using Class 3000 concrete with an allowable stress of 0.45 f'_c. If Class 4000 concrete is required, no change in detail is necessary other than to call for the higher strength concrete in the specifications. Intermediate grade steel was used with an allowable working stress f_s = 20,000 psi.

Reference is made to the following specifications (not included in the manual) as they affect the gate details:

a. Construction Specification Nos. 71, 81.
b. Materials Specification Nos. 553, 571, 572, 573, 581, 582.

III. NOMENCLATURE AND GENERAL NOTES

Components of the rising and non-rising stem type gates are schematically illustrated in Figure C-1.

Non-rising stems have limited application to Service use. Their main use is for installations where straight stem alignment is not possible. A universal joint transmits torsional forces at a slope change that prohibits the use of a rising stem.

Of the four types of gate seat backs, the one most used in the Service is the spigot back. It is cast directly in the concrete

or grouted into place, and anchored by preset bolts. It may also be connected directly to steel pipe. The spigot back is limited in availability to the low and medium duty gate. Not all manufacturers supply this type.

The flange back gate resists warping better than the spigot back. It is used to advantage in mounting on existing walls. For larger, heavy duty gates, this type is used with a thimble previously cast in the receiving wall.

The flange and spigot back gate seat is used primarily where top and bottom wedges are required and the gate cast directly in a concrete structure.

The flat back gate seat should be used with a thimble. A thin coat of fibrated mastic should be placed between the contact surfaces.

The gate seat opening may vary with class of gate. For light duty the gate seat opening may be circular. For heavier duty gates the seat may have a rectangular opening but the gate frame will reduce to a circular opening. A rectangular opening is used with special seat facings (usually bronze).

Bronze seat facings are recommended even with light duty gates. At the time of final adjustment a light application of waterproof grease should be applied to the seat faces.

Some leakage can be expected: the maximum should not exceed 0.2 gpm per foot of periphery at a face pressure equal to 16 ft of water.

IV. STANDARD INLET

A. Structure Size

Dimensions of the standardized inlet are tabulated on Figure C-2. The size of the inlet is directly related to the conduit diameter and is the same regardless of the head. Dimension (4) will require adjustment when pipe diameters other than those listed in the tabulation are used. This adjustment is required to keep the rest of the dimensions constant for each structure size. Structure dimensions pertain to an embankment slope of 3:1. A typical standard drawing (size H - 21" conduit) is shown on Figure H-3 of the completed example.

Inlet structure size J (36" conduit) will require change if hydraulic controls are used with the cylinder mounted at the gate. Discussion of controls will be found in Section D.

B. Trash Rack

Standard drawings for trash racks have not been developed because of the wide range in structure size and head. Two alternate systems of trash racks are presented with details and member sizes for each. Both alternates provide for a double cross bar to reduce longitudinal member sizes for the higher heads.

1. Figure C-2 contains details for trash racks welded into one unit. This construction is recommended for the lower head systems where the total rack weight would not exceed the ability of two men to set the rack in place.

2. Figure C-3 provides details for the alternate rack system. For the larger conduit sizes or higher heads, the rack may be assembled one longitudinal member at a time. This figure must be used with Figure C-2 for completing details.

C. Inlet Protection

Where the soil surrounding the inlet structure is fine grained with low plasticity, protection should be provided on both the slope and the level approach area. Size of rock and extent of protection from conduit centerline is given in Figure C-4. This figure was developed from the procedure presented in SCS Technical Release No. 3.

V. VENT PIPE

Vent pipes are recommended for all gated outlets provided flow meters are not to be used in the conduit. Vents were discussed previously in Section B, Hydraulics. The hydraulic analysis as a result of venting does not lend itself to exact analysis. The net effect of a vent is to reduce discharge capacity for the free flow outlet condition; the inlet control capacity will be minimum.

Recommended vent pipe diameters are shown in Figure C-5. The vent pipe size is based on a maximum air velocity of 100 fps and necessarily requires an increase in vent diameter with hydraulic head. A point of interest, maximum air demand occurs with a partial gate opening.

Three dashed lines curving upward to the right represent three fixed ratios of vent sizes called for by some manufacturers

under various conditions. These lines have been added for comparison only.

A word of caution--if the installation involves an extended pipeline with outlet control, an oversized vent will result from use of Figure C-5 without modification.

If the outlet pipeline is extended beyond the toe of the embankment and outlet control exists, the vent pipe may be reduced from that given directly on Figure C-5. Explanation of this difference is based on the fact that the standard dam was used in developing many of the design aids. With an extended pipeline the additional friction losses reduce the carrying capacity of the system, thereby reducing the velocity and vent size requirement. The required vent size for the longer pipeline can be readily found by converting the proposed system to an equivalent standard dam (for calculation purposes only) and selecting the vent size accordingly. The following example should illustrate the principle involved.

A standard dam with a 20 inch conduit (n = 0.011) outletting at the toe of the embankment will carry 40 cfs at a 16 ft. head, see Figure B-1, and require a 1.5 inch vent pipe, see Figure C-5. If the pipeline was extended another 100 ft. (L = 170 ft.) beyond the embankment the discharge for the same head would be reduced to 35 cfs, see Figure B-6, because of the additional friction loss. The 20 inch conduit diameter with a lesser discharge is the same as a standard dam with a head of 11 feet, see Figure B-1. With this lesser equivalent head the vent pipe diameter can be reduced from 1.5 inches to 1.25 inches, from Figure C-5.

VI. QUANTITY SURVEY

Concrete and reinforcing steel quantities are listed on Figure C-2. A refinement of these quantities based on conduit type and additional diameters is given in Table J-C1.

VII. EXAMPLE

Given: Continuing the earth dam problem from Section B.

Determine: Type of gate back, size of trash rack members, diameter of vent pipe, extent of inlet protection and reinforced concrete quantities.

Problem Analysis:

1. Find size of standard inlet to be used and its drawing number.
2. Find size of trash rack members.
3. Select other construction details and scale appropriate to reproduction method.

4. Determine need for rock protection at inlet and size of rock and filter required.

5. Determine size of vent pipe required.

6. Find material quantities for the inlet.

Solution: A spigot back gate is available in all three conduit sizes. This gate will be attached to the conduit, located on the proper slope and elevation, and inlet concrete placed.

Referring to Figure C-2, it can be seen that the structure size for the 20 inch conduit should be a size G; a size H will be used for the 21 inch and 24 inch conduits. Find the following items from the referenced figures.

1. Standard Drawings (from Figure C-2)

20" conduit	7-N-20465G
21" and 24" conduits	7-N-20465H

2. Size of trash rack members - Using a single cross bar because of the low head on the inlet, the following may be found from C-2.

Inlet	Trash Rack Member			
	Longitudinal	Cross Bar A	Cross Bar B	Z
G-1	1 1/2" pipe	4" x 3/8"	4" x 1/2"	4"
H-1	2" pipe	4" x 3/8"	4 I 9.5	4"

3. Construction details - Trash rack details are found on Figure C-2. Note that the lettering on these details is of a size and weight consistent with construction drawing requirements and a duplicate figure could be cut up and used in making a mosaic as explained in Section H, Drawing Layout and Summary.

4. Inlet protection - Recommended inlet protection is found on Figure C-5.

Conduit size	Rock size d_{75}	Filter thickness	R
20 W.S.	9"	5"	4'
21 R/C	9 1/2"	5"	4'
24 CMP	7 1/2"	4"	4'

This protection should be provided if the soil adjacent to the inlet is fine grained material of low plasticity.

5. Vent pipe - A 2" vent pipe, as obtained from Figure C-5, is recommended for all three outlet conduits.

6. Reinforced Concrete Quantities (from Table J-C1)

Conduit size	Type	Concrete, cu yds	Reinforcing, lbs
20"	Steel	3.4	209
21"	R/C	5.9	302
24"	CMP	4.7	302

7. Hydraulic control - If the hydraulic control alternate (discussed in Section D) is used, no modification of the standard inlet structure (except size J) is required other than to indicate embedded anchor bolts for the appropriate cylinder mount selected.

TYPES OF GATE FRAME BACKS

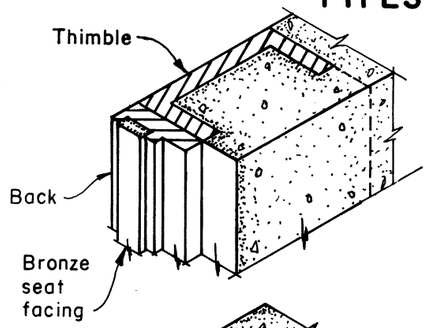

FLAT BACK Shown mounted on "U" thimble set in concrete wall. Anchor bolts are not required. This type of back may be mounted directly to the concrete surface or bolted to a pipe flange.

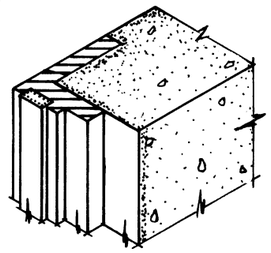

SPIGOT BACK Shown cast in place in a concrete structure. This type of back may also be grouted into place if proper recesses are provided. This type of back is also used when mounting a metal conduit.

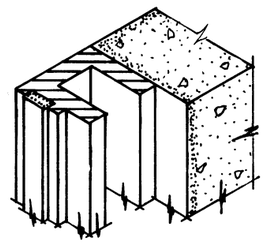

FLANGE BACK Shown mounted directly on a concrete face. This type of back is used on gates operating at higher heads and may require a thimble mount.

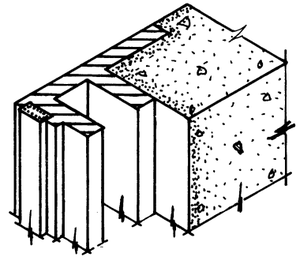

FLANGE AND SPIGOT BACK Shown cast in place in a concrete structure. This type of back is used on gates operating at higher heads.

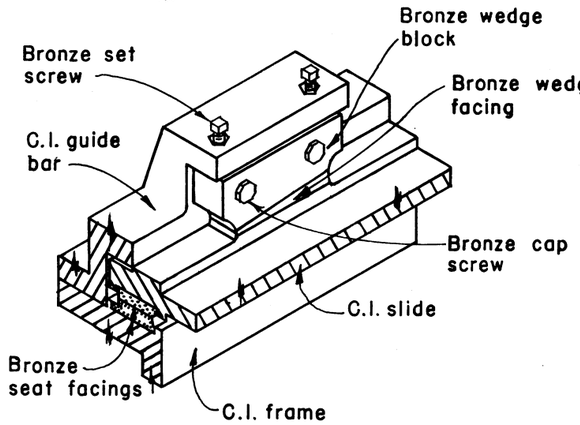

WEDGE BLOCK Used in developing a watertight gate seal. Wedge blocks will also be located at top and bottom of gate if gate is subjected to unseating pressure.

ALTERNATE LIFT DETAILS

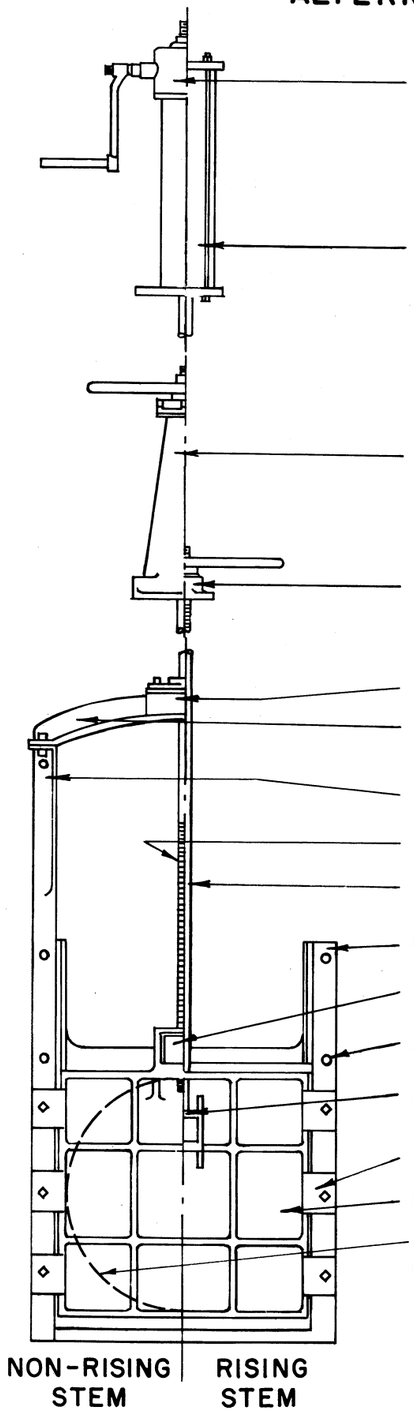

ENCASED GEAR PEDESTAL LIFT This type of lift is required for a larger gate or higher head combination.

HYDRAULIC CYLINDER LIFT This type of lift is ordinarily mounted on a gate yoke but can be mounted on the concrete surface in which the gate is set. The pump and valve for this lift may be located at the top of the embankment or at some other remote location not aligned with the gate axis.

PEDESTAL BASE HANDWHEEL LIFT This type of lift is normally used in a vertical position on an operating deck to raise the control wheel within reach of the operator.

HANDWHEEL LIFT This type of lift is similar to the pedestal base lift except it is mounted on an extension of the gate frame or onto an integral part of the structure.

THRUST BEARING

YOKE Alternate hydraulic cylinder location in place of thrust bearing and non-rising stem.

GATE FRAME Extend to support yoke.

STEM Non rising, threaded at gate.

STEM Rising, threaded at lift

GATE FRAME

STEM BLOCK

ANCHOR BOLT

STEM BLOCK

WEDGE BLOCK

GATE SLIDE

SEATING SURFACE Circular or rectangular opening

FIGURE C-1
NOMENCLATURE
WATER CONTROL GATE
EWP Unit Portland, Oregon

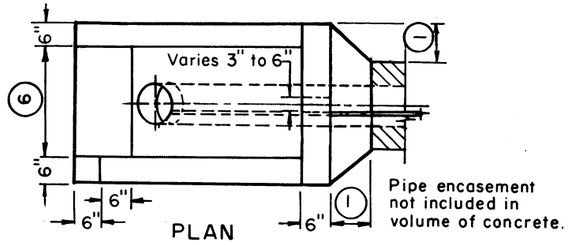

PLAN

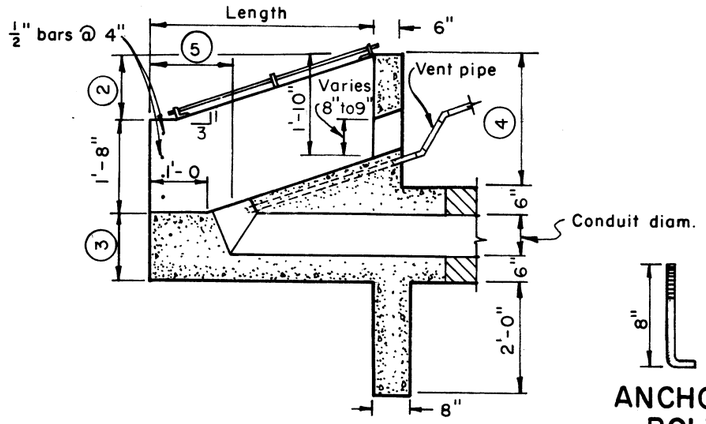

SECTIONAL ELEVATION

ANCHOR BOLT

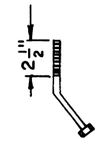

ALT. ANCHOR BOLT

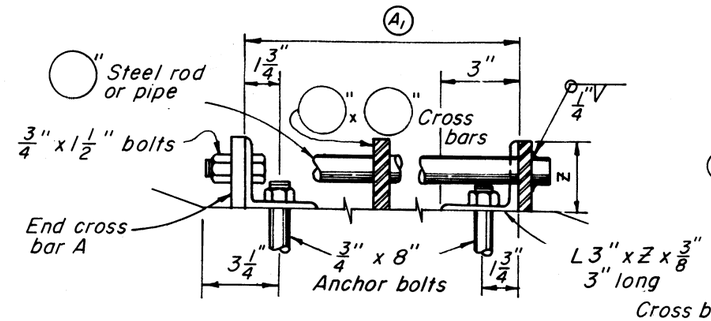

DETAILS

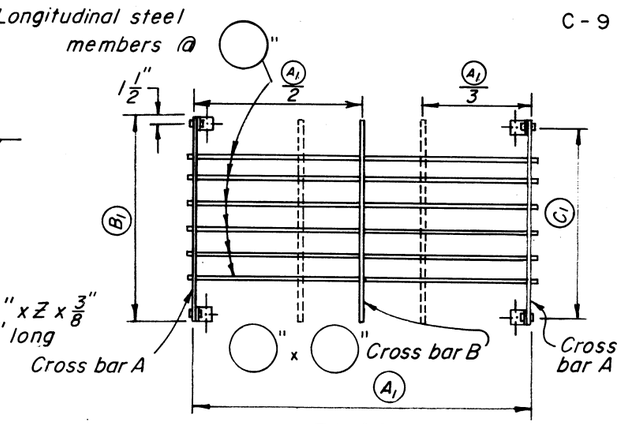

PLAN

TRASH RACK

Not to Scale

Note:
When one intermediate bar is used place at center.
When two intermediate bars are used space at $\frac{A_1}{3}$.

Structure / Conduit Size / ITEM	INLET STRUCTURE DIMENSIONS									
	A	B	C	D	E	F	G	H	I	J
	8"	10"	12"	14"	16"	18"	20"	24"	30"	36"
1	8"	7"	6"	5"	4"	9"	8"	1'-0"	9"	6"
2	1'-2"	1'-2"	1'-4"	1'-6"	1'-8"	1'-8"	2'-0"	2'-6"	2'-10"	3'-0"
3	1'-2"	1'-2"	1'-6"	1'-8"	1'-8"	2'-0"	2'-0"	2'-6"	2'-6"	3'-0"
† 4 (Varies)	2'-4"	2'-2"	2'-6"	2'-8"	2'-8"	2'-10"	3'-0"	3'-8"	3'-6"	3'-8"
5	1'-6"	1'-7"	1'-9"	1'-10"	2'-0"	2'-0"	2'-2"	2'-2"	2'-4"	2'-10"
6	2'-0"	2'-0"	2'-0"	2'-0"	2'-0"	3'-0"	3'-0"	4'-0"	4'-0"	4'-0"
LENGTH	4'-0"	4'-0"	4'-6"	5'-0"	5'-6"	5'-6"	6'-6"	8'-0"	9'-0"	9'-6"
TRASH RACK A_1	3'-5 1/4"	3'-5 1/4"	3'-11 1/2"	4'-6"	5'-0 1/4"	5'-0 1/4"	6'-1"	7'-7 3/4"	8'-8 1/2"	9'-2 3/4"
TRASH RACK B_1	2'-9"	2'-9"	2'-9"	2'-9"	2'-9"	3'-9"	3'-9"	4'-9"	4'-9"	4'-9"
TRASH RACK C_1	2'-6"	2'-6"	2'-6"	2'-6"	2'-6"	3'-6"	3'-6"	4'-6"	4'-6"	4'-6"
TRASH RACK BAR SPACING	4" c-c	4" c-c	6" c-c	6" c-c	8" c-c	9" c-c	10" c-c	10" c-c	12" c-c	12" c-c
⊛ VOL. CONC. C.Y.	1.33	1.32	1.57	1.84	1.97	2.91	3.40	4.72	6.52	7.00
REIN. STEEL	109#	108#	127#	129#	144#	174#	209#	302#	328#	366#
STD. DWG. NO.	7-N-20465 (Suffixed by size letter) 2 sheets per each structure size									

⊛ Volume of concrete using C.M.P. or steel pipe. See Table J-C1 for volumes using other types and sizes of pipe.

† If pipe diameter is different from that tabulated adjust dimension 4 to keep the total height of the inlet constant. (See discussion Section C-IV-A)

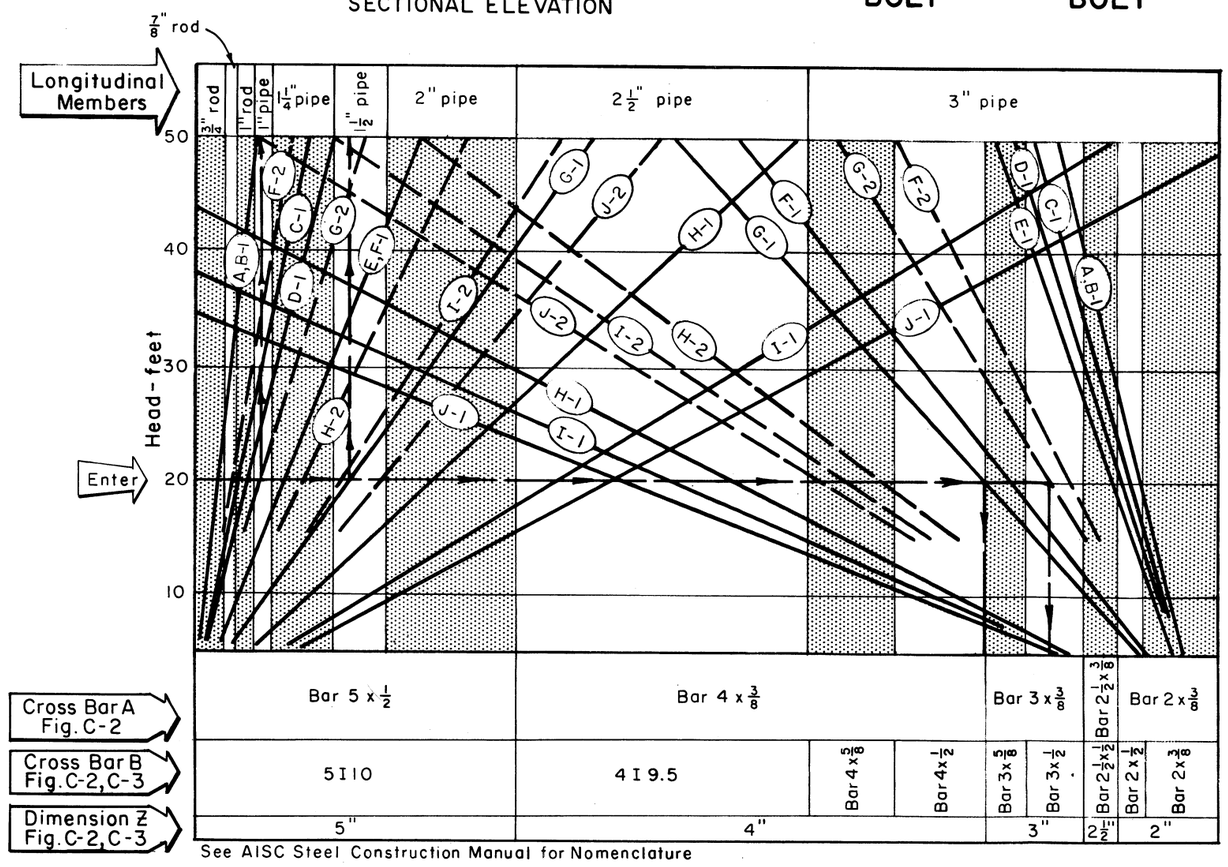

See AISC Steel Construction Manual for Nomenclature

Example

Given: Structure size G
Head = 20 feet

Find: With one intermediate cross bar use line G-1
Longitudinal member = 1 1/2" pipe
Cross bar A = 4" x 3/8"; Cross bar B = 4" x 1/2"
Z = 4"
With two intermediate cross bars use line G-2
Longitudinal member = 1" pipe
Cross bar A = 3" x 3/8"; Two cross bars B = 3" x 1/2"
Z = 3"

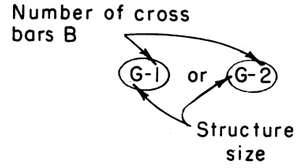

FIGURE C-2

INLET STRUCTURE

EWP Unit Portland, Oregon

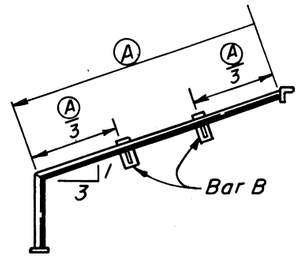

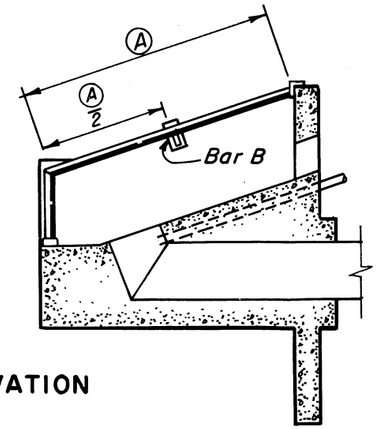

Note:

Do not weld longitudinal members to bars B.

*For inlets larger than size E use separately removable longitudinal members.

SECTIONAL ELEVATION

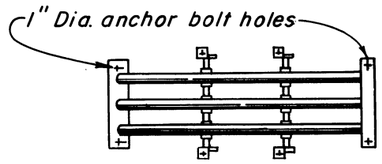

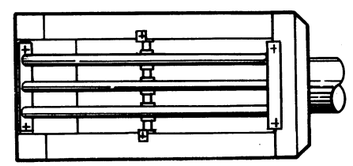

PLAN

Two Cross Bars

One Cross Bar

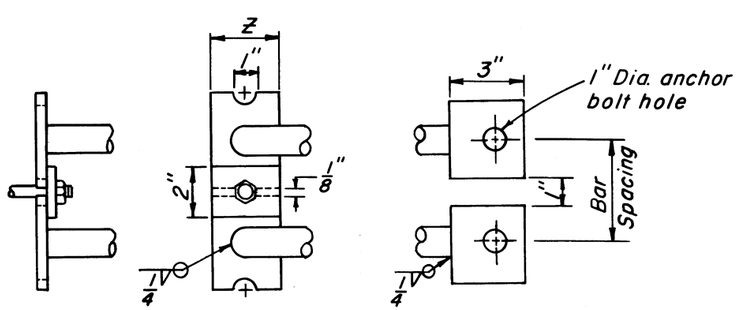

END FASTENING DETAILS FOR "F" SIZE AND ABOVE STRUCTURES

TRASH RACK FASTENING DETAILS

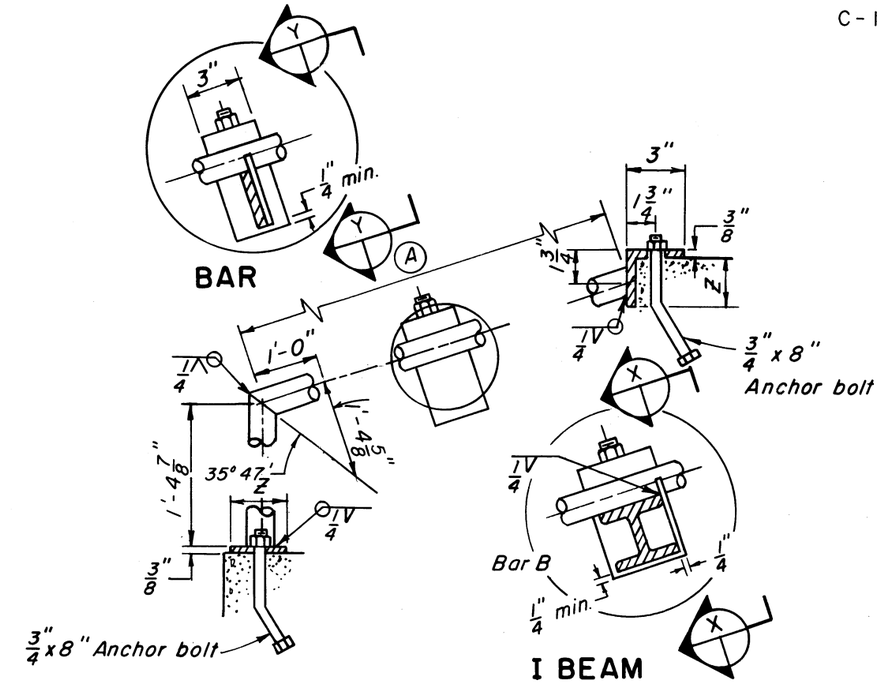

TRASH RACK FASTENING DETAILS

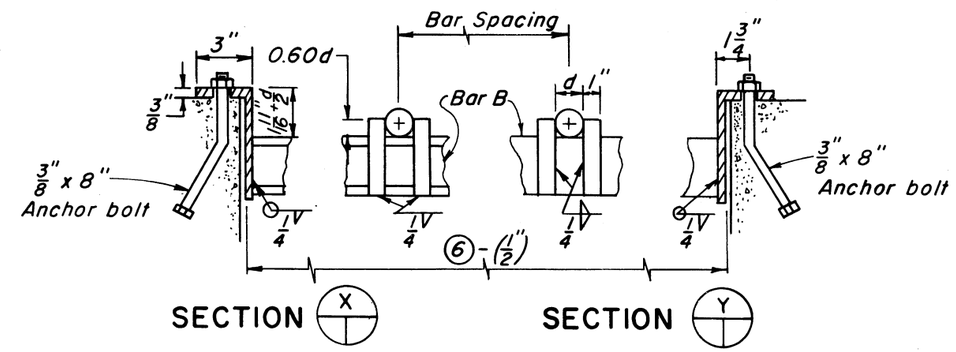

See Figure C-2 for dimensions not given on this figure.

SIZE / ITEM	ALTERNATE TRASH RACK DIMENSIONS									
	A	B	C	D	E	*F	G	H	I	J
Ⓐ	4'-0 3/8"	4'-0 3/8"	4'-6 3/4"	5'-1 1/8"	5'-7 3/8"	5'-7 3/8"	6'-8"	8'-3"	9'-3 5/8"	9'-10"
Ⓑ	1'-10"	1'-10"	1'-10"	1'-10"	1'-10"	2'-10"	2'-10"	3'-10"	3'-10"	3'-10"
Ⓒ	4"c-c	4"c-c	6"c-c	6"c-c	8"c-c	8"c-c	10"c-c	10"c-c	12"c-c	12"c-c

Example

Given: Structure size G, head = 20'
Use one cross bar B

Find: From figure C-2 longitudinal member = 1 1/2" pipe
Cross bar B = 4 x 1/2", length = 3'-0" − [1/2" + 2(3/8")] = 2'-10 3/4"
Z = 4"
From figure C-3, A = 6'-8", B = 2'-10", and bar spacing = 10" c-c
Use separately removable longitudinal members

FIGURE C-3
ALTERNATE TRASH RACK
EWP Unit Portland, Oregon

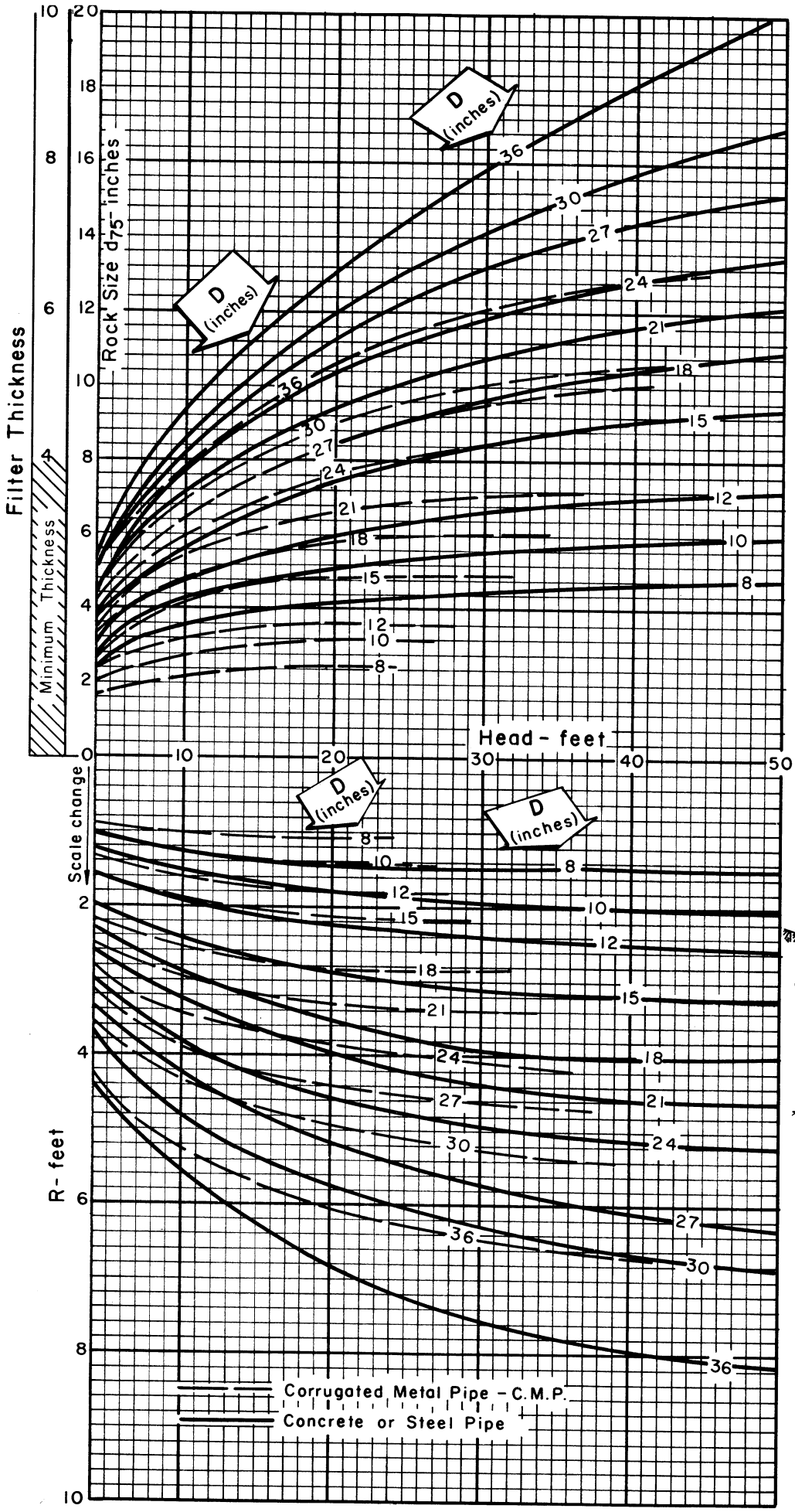

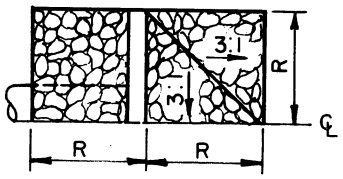

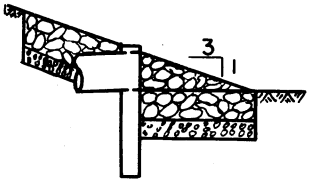

Thickness of rock riprap equals $1.5d_{75}$.

Thickness of filter equals $0.5d_{75}$ or 4" whichever is greater.

ROCK RIPRAP

CONCRETE

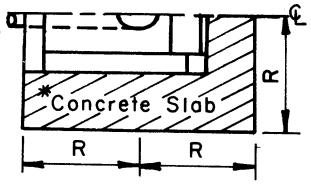

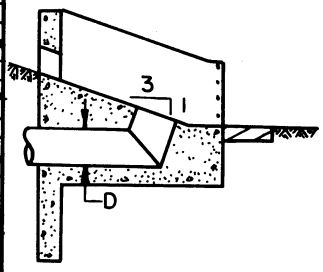

*Rock riprap may be used in the shaded area instead of the concrete slab.

FIGURE C-4

INLET PROTECTION

EWP Unit Portland, Oregon

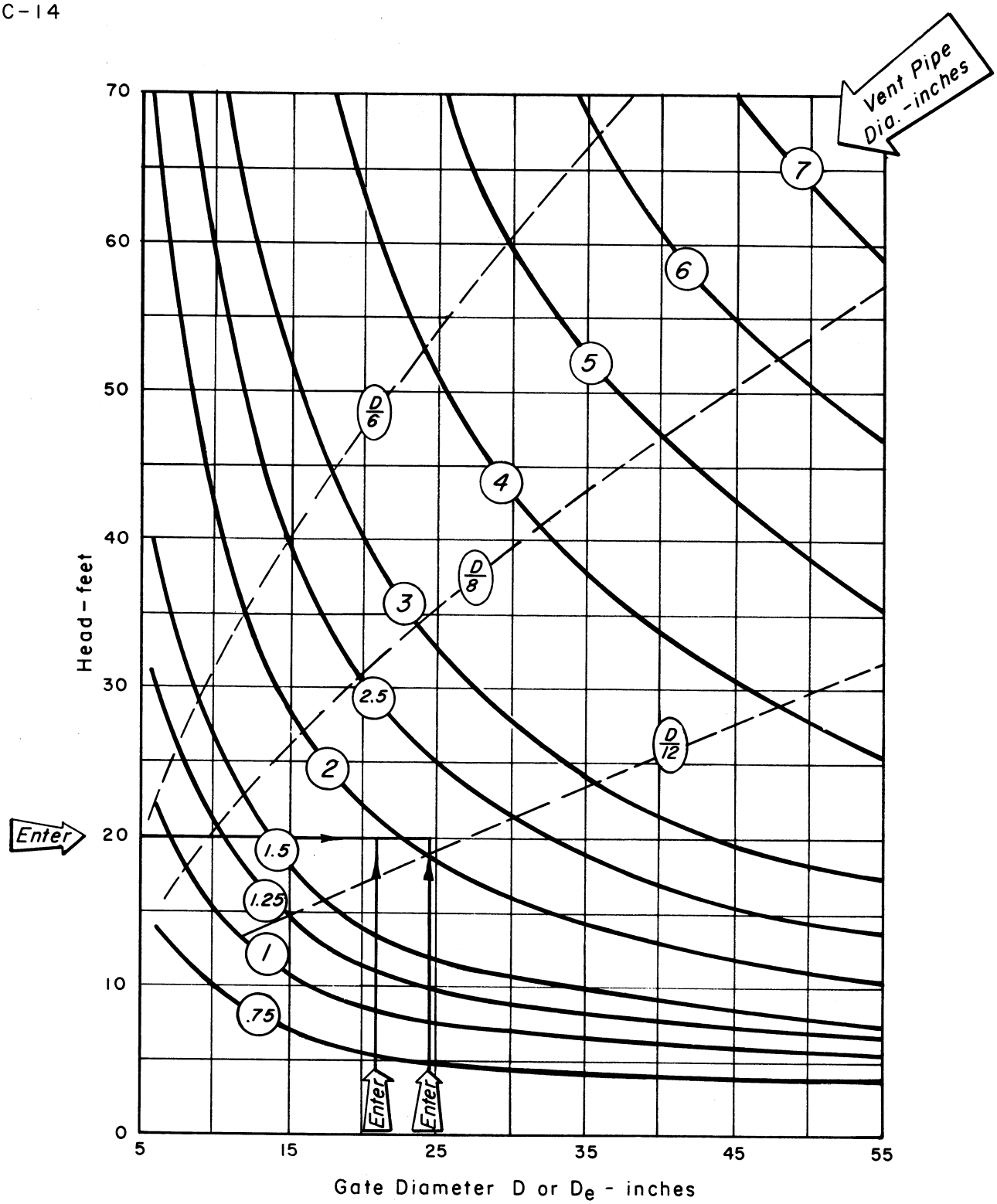

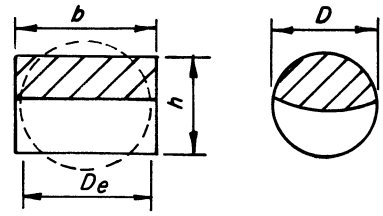

Note:

For rectangular gates enter chart with equivalent diameter (D_e)

$$D_e = 2\sqrt{\frac{bh}{\pi}}$$

FIGURE C-5

VENT PIPE DIAMETER

EWP Unit Portland, Oregon

SECTION D - CONTROLS

Contents

		Page
I.	INTRODUCTION	D-1
II.	DESCRIPTION OF SYSTEMS	D-1
	A. Mechanical	D-1
	B. Hydraulic	D-2
	1. Cylinder	D-3
	2. Pump	D-3
	3. Reservoir	D-3
	4. Control valve	D-3
	5. Hydraulic lines	D-4
	6. Hydraulic fluid	D-4
III.	COMPARISON	D-4
	A. Mechanical System	D-5
	1. Advantages	D-5
	2. Disadvantages	D-5
	B. Hydraulic System	D-5
	1. Advantages	D-5
	2. Disadvantages	D-6
	C. Labor Requirement	D-6
	D. Motor Operated Controls	D-10
	E. Power vs. Manual Control Operation	D-11

Contents (continued)

Page

IV. GATE CONTROL SELECTION PROCEDURE D-11

A. Mechanical Controls D-12

1. Lift Pedestal Size D-12

2. Stem Diameter D-12

3. Lift Type D-13

4. Inlet Structure Size D-13

5. Stem Pedestal Spacing D-13

B. Hydraulic Controls D-14

1. Cylinder Mount D-14

2. Thrust D-14

3. Cylinder and Rod D-14

4. Reservoir D-15

5. Pumps D-15

6. Valves D-16

7. Tubing D-16

8. Fluid D-17

V. DESIGN DETAILS D-17

A. Mechanical System D-17

1. Gate Stem Encasement Selection Chart, Figure D-2 D-17

2. Gate Stem Details, Figures D-3, D-4 . . . . . D-17

3. Gate Stem Pedestal, Figure D-5 . . . . . D-18

4. Gate Stem Guide and Vent Pipe Hanger, Figures D-6, D-7, D-8 . . . . . D-18

5. Gate Lift Pedestal, Figure D-9 . . . . . D-18

6. Handwheel Bracket and Base Plate, Figures D-15, D-16, D-17 . . . . . D-18

B. Hydraulic System D-18

Contents (continued)

Page

VI. EXAMPLE D-21

VII. SPECIFICATIONS D-25

A. Sample Material Specification - Hydraulic Controls . D-25

B. Sample Construction Specification, Installing Hydraulically Operated Slide Gates D-29

Figures

D-1 Gate Control Selection Chart D-33

D-2 Gate Stem Encasement Selection Chart D-35

D-3 Gate Stem Details D-37

D-4 Encased Gate Stem Details D-39

D-5 Gate Stem Pedestal D-40

D-6 Adjustable Stem Guide and Vent Pipe Hanger D-41

D-7 " " " " " " " D-43

D-8 " " " " " " " D-45

D-9 Gate Lift Pedestals D-46

D-10 " " " Size A D-47

D-11 " " " " B D-48

D-12 " " " " C D-49

D-13 " " " " D D-50

D-14 " " " " E D-51

D-15 Handwheel Bracket for Gate Lift Pedestal, Sizes A & B . . D-52

D-16 Base Plate for Pedestal, Size C D-53

D-17 Base Plate for Pedestals, Sizes D & E D-54

D-18 Gate Lift Pedestals, Steel Schedule D-55

D-19 " " " " " D-56

Figures (continued)

Page

D-20 Hydraulic Control Application D-57

D-21 Selection Chart for Hydraulic Cylinders D-59

D-22 Typical Details for Hydraulic Cylinder Gate Controls . . D-61

D-23 Hydraulic Cylinder Interchange Chart D-63

D-24 Control Operation - Manual vs. Power D-64

SECTION D - CONTROLS

I. INTRODUCTION

Water storage reservoirs require outflow control to satisfy downstream water needs. The control system should be adjustable to a degree that waste is minimized, and should be able to retain its setting.

The most common method of reservoir water control is the slide gate operated by means of a handwheel or geared crank lift. Support for the lift and the stem is provided by concrete pedestals set in the embankment.

The hydraulic cylinder has been used a long time for slide gate control in water treatment plants. Recent advances in materials and production technology made the hydraulic system adaptable to many applications in earth dams.

The Interchangeable Series of hydraulic cylinders of the Joint Industry Conference (JIC), available from several manufacturers, includes a wide range of sizes. A pressure range of 2000 psi operating, or 3000 psi non-shock, a variety of mounting styles of certain standard mounting dimensions, and several features that fill the requirements of Service installations are readily available.

II. DESCRIPTION OF THE SYSTEMS

A. Mechanical

The mechanical system develops its lifting force from the principal of the screw. A handwheel or gear reduction unit, see Figure C-1, converts the effort of the operator on the handle to torque on the lift nut and thrust on the stem and the gate slide. The reaction to this thrust is taken by the mass of the gate lift pedestal and the embankment in which it is embedded.

The thrust is transmitted to the gate by the stem, held in alignment by guides that are in turn secured to gate stem pedestals set in the embankment. If the basic structure is all concrete, the lift, guides, and gate frame are secured to it and all reactions are transmitted through it. Some manufacturers list a single maximum guide spacing for each stem size. The spacings shown on Figure D-1 are set by the allowable combined stresses in the stem material caused by the axial loading and bending from stem weight and eccentricity. Guides have several inches of vertical adjustment for correcting stem alignment as the embankment settles. Provisions for lateral adjustment are also included.

A variation of this system, the non-rising stem model is illustrated in Figure C-1, in which the lift nut is mounted in the gate slide and moves up or down as the stem is turned at the control station. Thrust is taken by a bearing on the gate frame yoke and the length of stem from the control station to the frame transmits torque only. In this variation the handwheel or gear unit is keyed to the stem.

In areas where freezing is a regular winter occurrence, it is necessary to encase the stem and bury it to avoid its being bound in ice or forced out of alignment. The encasement consists of a pipe filled with oil, equipped with seals at each end to allow the stem to slide freely through while retaining the oil. Carbon steel stem is used throughout the encasement length except that portion which moves through the seals. To maintain an effective seal, the section of stem that moves through the seal must remain corrosion-free and smooth, and is made of bronze* or stainless steel. Even though tables indicate that a smaller stem of stainless steel could replace the regular size of carbon steel, it is not practical (considering the necessary adaptions) to change the size for one section of the stem.

If it is necessary to use a bolted splice instead of the riveted one shown in the standard drawing, it will also be necessary to increase the size of encasement pipe and the quantity of oil.

In some cases, a "T" has been used in the encasement near the weather seal for addition of oil. This detail has not been shown on the standard drawing since the weather seal can be loosened for the infrequent need for more oil.

There are instances where the upper end of a stem encasement has been cast into the concrete of the lift pedestal. Designs in this Section consider that no thrust is to be carried in the encasement pipe. The supporting angle at the lift pedestal serves only to aid alignment and to relieve the packing gland of supporting the encasement weight. Any repair to lift, stem or gate that will require the disassembly of the encasement will show the advantage of independent construction.

B. Hydraulic

The muscle of the hydraulic system is the double-acting hydraulic cylinder that uses oil under pressure (up to 3000 psi) to move the piston and the attached gate slide. Pressure is developed by a hand or power operated pump at the control station and developed by a hand or power operated pump at the

* High cost of bronze makes stainless a more economical choice.

control station and directed through piping to the opening or closing end of the cylinder by a 4-way valve. Typical Hydraulic Control Applications, Figure D-20, show variations in gate orientation that can be obtained without the usual alignment and access problems. The control station can be placed at any convenient location within economic limits. Components are:

1. Cylinder

   As stated earlier, a cylinder selected from the JIC Interchangeable Series can be supplied by several manufacturers. Certain options are necessary to meet the special needs of Service installations. Stainless steel piston rods are essential for submerged location. The exterior surfaces of the cylinder should have corrosion protection of chrome, cadmium plating or an epoxy enamal.

   Packings for the piston and the rod gland must have maximum sealing characteristics to enable the piston to hold the gate in a raised position over a period of several days. A multiple-v type seal or a new cup type with an O-ring filler will give near zero leakage. The rod gland of these cylinders is replaceable without disassembling the whole cylinder.

2. Pump

   Pressure to operate the cylinder is developed by a pump powered by hand, electric motor, or internal-combustion engine. There are several variations of pumps available that meet the minimum requirement for pressure. Hand pumps may be single or double acting, with dual pistons, adjustable leverage arrangements, or self-regulating devices to vary the flow rate when pressure requirements change. Rotary pumps for powered operation are usually of the gear, vane, or axial-piston type, listed in the ascending order of pressure capability.

3. Reservoir

   An oil reservoir is necessary and should be located to keep the pump intake full at all times. Minimum reservoir capacity should be sufficient to contain the oil displaced by the cylinder piston rod when in the retracted (upper) position.

4. Control Valve

   A 4-way valve directs the flow of oil from the pump to the opening or closing side of the cylinder piston and allows

return flow of oil to the reservoir. This valve may be a rotary or a spool type, either one further qualified as closed or open center.

A rotary-type selector valve effectively stops any back flow from the cylinder while in a neutral position, and maintains the set position of the gate.

The spool-type valve, commonly used on hydraulic equipment, has internal leakage inherent with its design and can allow the gate to creep closed over a period of time unless supplemented by a pilot-operated check valve at the cylinder.

For hand-operated pump installations, a closed center valve is recommended. It will permit no through flow when the valve is in a neutral position.

For power-operated systems, an open center valve is necessary to permit free return flow to the reservoir when the pump is idling.

5. Hydraulic Lines

Pipe lines connecting the control station and the cylinder at the gate should be either stainless steel tubing or a rubber or synthetic hose suitable for medium or high pressure. In most cases they will be buried in the face of the embankment within a conduit of galvanized, fiber, or plastic pipe for external protection. Hose fittings should be corrosion resistant and of the permanent type, factory installed.

6. Hydraulic Fluid

The hydraulic fluid is most commonly a mineral base oil with additives to maintain chemical stability, lubricating qualities, and anti-corrosion characteristics. Its viscosity should not exceed 3000 SSU (Saybolt second units) at the lowest expected operating temperature. This is to assure oil flow to the pump and lubrication during cold starting. This is most important to a powered unit.

However, viscosity is an important factor in line loss due to friction and so affects hand units as well.

III. COMPARISON

A choice between mechanical and hydraulic controls can be made by evaluating the advantages of the conditions for each system. For

the usual situation, costs have been compared and the black dashed line on Figure D-1 represents the combination of head and gate size for which costs are about equal. Cost studies favor the mechanical system below the line and hydraulic above. The cost comparison assumes no stem is used in the hydraulic system and the cylinder is located at the gate.

The advantages and disadvantages of the two control systems to be evaluated for a particular installation are:

A. Mechanical System

1. Advantages

Simplicity of design. Economy in many sizes of gate-frame-lift units. Gates, lifts, and accessories are available from the same manufacturer. This factor is of more importance when it is necessary to place some responsibility for design with a subcontractor or supplier. Positive indication of the gate opening can be obtained. Portable gasoline or electric drives are available.

2. Disadvantages

The system needs careful alignment of all components. It is subject to misalignment with any settlement of the embankment. Broken slopes need special equipment, such as universal joints. Installations on vertical risers need access facilities such as catwalk or boat. Stop nuts are the only safety devices on standard units. Excess force on the handwheel or crank can damage the gate or the structure. Powered and automatic units with all safety devices are quite expensive. Labor efficiency is about 20%.

B. Hydraulic System

1. Advantages

The gate may be oriented in any position without alignment with the control station. Broken slopes are no problem. The control station can be located anywhere (such as at the downstream measuring device) that can be reached with flexible conduit; convenience can be balanced with economy. Controls are easily adapted to power, remote, and automatic control. A multiple gate installation can be placed more compactly to use a common pump and power source. This system has an economic advantage in may slope installations or on risers that would otherwise require access facilities. Safety devices are easily incorporated into this system. Parts and service are available from local distributors. Labor efficiency is about 70%.

2. Disadvantages

There is a possibility of oil leakage. Positive indication of the gate opening is difficult. An approximation can be made with an oil level sight gage on the reservoir. Low temperatures can affect the speed of operation.

C. Labor Requirement

As a means of explaining and illustrating some of the principles involved in labor appraisal, the following example and explanation has been included.

Given: A 30" x 30" gate under 40' differential head.

Determine: Work required to open the gate by mechanical or hydraulic lift.

Solution:

The force required to move the gate is given by equation

$$F = fwhA + G$$

where:

F = total force required at the gate (lbs)
f = coefficient of static friction between gate slide and seat
w = density of water (62.4 lb/cu ft)
h = unbalanced head of water on center of gate (ft)
A = area of gate, including 1 inch seats (sq ft)
G = weight of gate slide in air (lbs)

For a mechanical lift one manufacturer recommends a value of f = 0.3 for operation (relying on a momentary overload to overcome static friction, f = 0.7). The average weight of a 30" x 30" gate is 450 lbs.

Substituting

$$F = 0.3\ (62.5)(40)(2.67)^2 + 450 = 5790 \text{ lbs}$$

The manufacturer's selection is a geared crank lift with a 4 to 1 ratio and a stem diameter of 2 inches. The rating of the lift lists a capacity of 7540 lbs with 25 lb force on the crank, and 16 turns required per inch of gate movement. Efficiency of the lift is included in this catalogue rating.

Since only 5790 lbs are needed, the required force (F_R) will be proportional.

$$F_R = \frac{5790}{7540} \times 25 = 19 \text{ lbs}$$

Total work is a product of force (F) and distance (D) or

$$W = FD$$
$$= F_R 2r\pi n$$

where: W = total work (in-lb)
F_R = force required on crank (lb)
r = crank radius (inches)
n = number of crank turns

For one inch gate movement

$$W = (19)(15)2\pi(16)$$
$$= 28{,}700 \text{ in-lb work input}$$

For the same gate installed with a hydraulic cylinder lift the same manufacturer requires 0.7 for a friction factor. The higher force for this installation is based on the concept that the gate will seat tighter and with pulsating oil flow from a single acting pump the gate will intermittently stop and start.

$$F = 0.7(62.5)(40)(2.67)^2 + 450$$
$$= 12{,}480 + 450$$
$$= 12{,}930 \text{ lbs}$$

Chart 3, Figure D-21, gives a cylinder of 3-1/4 inch diameter with a standard piston rod. Piston area available for the opening stroke is 6.811 sq in. The pressure at less than 2000 psi is indicated by the shading but can be calculated more exactly as follows:

$$p = \frac{F}{A}$$
$$= \frac{12{,}930 \text{ lbs}}{6.811 \text{ in}^2}$$
$$= 1900 \text{ psi}$$

where: p = operating pressure (psi)
F = total force (lbs)
A = area of piston (sq in.)

The value of p is the pressure required at the cylinder. Losses in moving the cold oil through the tubing will require additional pressure at the pump.

Assuming a viscosity of 3000 SSU (Saybolt second units) at about 30° F, a volume of 0.1 gallon per minute will cause a pressure loss drop of 100 psi per 100 feet of 3/8 hose. The 40 ft head example will require about 250 ft of connecting hose.

$$p \text{ loss} = \frac{250}{100} \times 100$$

$$= 250 \text{ psi}$$

The operating pressure at the pump will then be the pressure at the cylinder + line loss, or

$$p = 1900 + 250$$
$$= 2150 \text{ psi}$$

A common hand pump rated up to 3000 psi may have a displacement of about 0.6 cubic inches for a full stroke. In hydraulic terms, work (W) is defined as a product of pressure (p) and volume (v).

$$W = pv$$

For one stroke of the example pump

$$W = 2150 \frac{\text{lb}}{\text{in}^2} \times 0.6 \text{ in}^3$$
$$= 1290 \text{ in-lb}$$

The mechanical equivalents of this amount of work are illustrated in the following sketch:

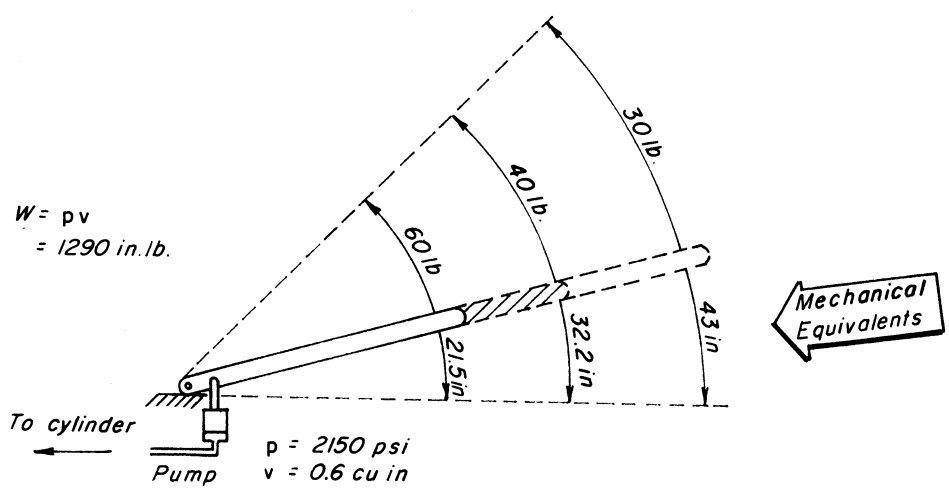

Mechanical Equivalents
for full piston stroke

If a comfortable stroke is assumed at 30 pounds through 25 inches, the useful piston displacement will be found by reversing the above process.

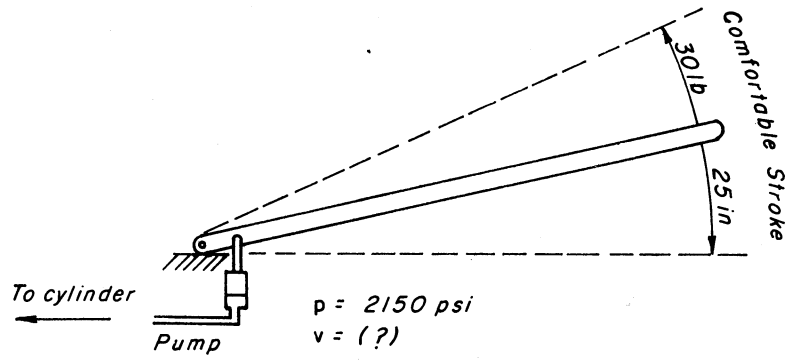

Hydraulic Equivalent
for reasonable input

$$v = \frac{W_1}{p} = \frac{FD}{p}$$

$$v = \frac{30 \text{ lb} \times 25 \text{ in}}{2150 \ \frac{\text{lb}}{\text{in}^2}}$$

$$= \frac{750}{2150} \text{ in}^3$$

$$= 0.349 \text{ in}^3$$

where W_1 = force applied X distance (per stroke)

The number of strokes required to move the gate one inch is:

$$n = \frac{A}{v}$$

$$= \frac{6.811 \text{ in}^3/\text{in}}{.349 \text{ in}^3}$$

$$= \frac{19.5 \text{ strokes}}{\text{inch}}$$

n = number of pump handle strokes
A = piston area or volume per inch of cylinder piston movement
v = useful pump piston displacement

The work applied in moving the gate one inch

$$W = nW_1$$
$$= 19.5 \times 750 \text{ in-lb}$$
$$= 14{,}600 \text{ in-lb}$$

For the example the mechanical lift requires 28,700 in-lb of work input to accomplish 5,790 in-lb of work output. The efficiency is the ratio.

$$\text{Eff} = \frac{\text{work output}}{\text{work input}} \times 100$$

$$= \frac{5{,}790 \text{ in-lb}}{28{,}700 \text{ in-lb}} \times 100$$

$$= 20\%$$

As calculated, considering losses due to oil flow, the hydraulic system requires 14,600 in-lb of work to accomplish 12,930 in-lb of work output efficiency for this part of the system is

$$\text{Eff} = \frac{12{,}930 \text{ in-lb}}{14{,}600 \text{ in-lb}} \times 100$$
$$= 88\%$$

The efficiency of a cylinder is about 95-98% and the pump is estimated at 85% based on a larger ratio of friction surfaces and more mechanical linkage.

The overall efficiency of the system is a product of these three, or

$$\text{Eff} = 0.88 \times 0.95 \times 0.85 \times 100$$
$$= 71\%$$

From the above there is considerable difference in labor between the two systems which will become even greater if the friction factors should be considered more nearly equal. The difference becomes significant when costs are assigned to the labor of operation

D. Motor Operated Controls

Power drive equipment should include the following features:

Reverse - for opening or closing the gate.

Clutch - for quick disengage especially in electric motors of portable units.

Torque limit - prevents overload when gate is seated or hits a submerged object.

Adapter - connects drive unit to lift control.

Gear reduction - proper reduction of motor speed to recommended gate shaft revolution thru the lift control device.

Drive equipment may be portable and serve several gates or may be permanently installed and suitable for outdoor operation of a single gate, as is necessary in automatic operation.

The drive equipment may be gas engine, electric, or a gas engine operated generator for an electric motor.

Manual control size and gear ratio are selected not to exceed man's capacity to turn a crank. The need for a motor to operate the controls will depend primarily on the allowable time limit for resetting the gate. Small gates would normally not require power operation. The larger gates could require motorized lifts if the gate is to be moved over its full height, however seldom will the gate be fully opened or closed against a full head at any one time. A typical irrigation season might begin with 1/2 of the design flow, requiring 1/4 opening of the gate with a full reservoir. Flow changes throughout the season require minor adjustments of the gate. At 3/4 way through the season, full flow might be obtained with 3/8 gate opening and about 1/2 of full head. For emergency gate closure probably not more than 1/4 to 1/3 of the effort required to move the gate for its entire diameter at full reservoir will be needed.

E. Power vs Manual Control Operation

Figure D-24 has been developed for calculating effort required to operate the controls. In this figure, present day manpower capability has been assessed in terms of fractional horsepower. Entering with the required force in the appropriate system (hydraulic or mechanical) move to the intersection with the desired gate travel, follow the 45° guide line down to the point of intersection for the limiting time for operation, move horizontally to read horsepower and intensity of physical effort.

IV. GATE CONTROL SELECTION PROCEDURE

Once the gate size has been determined, the selection of the gate controls is complicated and yet fairly simple. Part of the

complication lies in the variety of catalogue equipment and engineering data available from the several suppliers in the area. Reducing the number of component choices to those available from several suppliers and standardizing the appurtenances simplifies the selection procedure.

The vertical scale at the left edge of Figure D-1 will normally be the maximum head on the gate. Even with an extended pipeline on a steep slope very little additional head will be developed below the gate provided the system is vented as recommended in Figure C-5. Except for unusual situations the head on the system is measured from gate centerline to free water surface.

Two horizontal scales immediately below the body of the chart list the additional information normally required before the system can be designed. Emphasis must be placed on the fact that while the conduit size and gate size may be the same, the load is exerted over a greater area because of the gate seats. Adding 3 inches to the gate diameter will be sufficient for most gate models to allow for the extra area over which the water pressure can be applied. A word of cation: A CIRCULAR CONDUIT MAY HAVE A GATE WITH SEAT FACINGS SET IN A RECTANGULAR PATTERN THAT MATERIALLY INCREASES THE LOAD ON THE CONTROL SYSTEM. In this case, a rectangular area including gate seats should be used in calculating resisting force.

A. Mechanical Controls

The total load to be handled by the components of a gate control system varies with the size of gate and head of water. A series of diagonally curved lines on Figure D-1 expresses the variation of load directly into component size requirements rather than in pounds. Since the stem diameter, the lift and its pedestal are sized for this common load, their selection has been incorporated into this one figure.

1. Lift Pedestal Size

The uppermost scale of Figure D-1 is divided into six zones, A thru F, representing standardized lift pedestal sizes and the range of load (gate size vs head) for which they were developed. Zone limits have been extended into the body of the figure by the solid black diagonally curved lines. Details for the lift pedestal are found on Figures D-9 thru 14 and in the Appendix, Table J-D2.

2. Stem Diameter

The second scale across the top of Figure D-1 is divided into three red areas extending into the body of the figure.

These separate the figure into five zones delineating the range of load that may be handled by the stem diameters listed across the figure. The diameters have been limited to those readily available from most gate suppliers.

3. Lift Type

The third scale on Figure D-1 pertains to lift type. For larger gates and higher heads the load is heavy enough so that geared crank lifts are required. This zone is shown with a black background and is divided into three gear ratios. For smaller gates and heads, an operator can handle the load with a less expensive handwheel varying in size from 10" to 30" diameters listed across the scale. As the load becomes greater at the right end of the handwheel scale, ball bearings are required to reduce friction and consequently, the pull that the operator has to exert on the handwheel to move the gate. Both handwheel and geared crank lift are sized so that the maximum pull the operator has to exert is 40 lbs. A bronze lift nut will reduce friction and the required pull to about 35 lbs maximum and is recommended for those installations that require frequent gate adjustment.

4. Inlet Structure Size

The inlet structure size is not shown on this sheet. Its size is dependent only on the conduit. The appropriate letter designation may be found on Figure C-2.

5. Stem Pedestal Spacing

The diagonal line slanting upward toward the right across the chart gives recommended spacing of the gate stem supports.

a. Encased stems

The dimensions just above the line are for encased stems which should be used in areas subject to freezing or where the stems are to be buried in rock riprap.

b. Unencased stems

Below the diagonal line, support spacings are listed for unencased stems to be used in geographic areas not subject to freezing. Unencased stems cannot be buried. When the distance between supports becomes smaller, an encased stem becomes cheaper. A reminder

of this fact is indicated on this figure and in the previous discussion of Figure D-2. Obviously the comparison should be made only when the unencased stem might be used.

B. Hydraulic Controls

The cost of stem controlled gates varies directly with gate size and also with head. At some combination of head-gate diameter, the cost of hydraulic controls becomes cheaper than the stem control. A black dashed diagonal line curving downward to the right across the face of the chart delineates approximately a break-even point between the two systems. Comparison between the two control systems was discussed in II, DESCRIPTION OF SYSTEMS.

Anchorage requirements and selection of two components for the hydraulic system is simplified by the "Selection Chart for Hydraulic Cylinders", Figure D-21. The following are components or considerations that require evaluation in a hydraulic system:

1. Cylinder Mount

Before the actual cylinder size is determined the type of cylinder mount should be selected. Structure type and gate details are factors in this selection. Several types of mounts for typical applications are shown on Figures D-20 and D-22.

2. Thrust

Enter Chart I (Figure D-21) with head on the gate and gate area (including allowance for gate seats). From the intersection of lines projected from these values move downward to the right parallel to the 45° guide lines to Chart 2. When the extended line reaches the point corresponding to the weight of the gate slide, turn horizontally to right and read thrust on cylinder mount. This thrust is the maximum force required to overcome static friction between gate seats and the pull of gravity on the slide.

3. Cylinder and Rod

From the thrust value, continue horizontally into Chart 3 to intersection with a vertical line projected from the value of "L" at the bottom of the chart. "L" shown schematically in the diagram in the upper right corner of Figure D-21 is the unsupported length of the rod and depends on the location of the cylinder mount.

Chart 3 is divided into 14 irregular shaped zones defined by the heavy black lines and labeled with a cylinder bore size enclosed in a circle. Beside each bore size is the area of the piston that is effective in the pull or retracting stroke. The abbreviation Std or O.S. following the area indicates whether the piston rod is standard or oversize. Each zone is divided into two areas: the red area represents pressures between 2000 and 3000 psi with the higher values at the top of the area; the white area represents pressures below 2000 psi.

A point on Chart 3 for a combination of thrust and distance (L) determines the cylinder requirements: pressure (greater or less than 2000), bore, and rod type (standard or oversize).

4. Reservoir

Minimum reservoir capacity for oil storage is the volume of the cylinder less that displaced by the piston and rod. Displacement of an oversize rod is greater than that for the standard rod. Chart 4 of Figure D-21 takes this in account by providing two vertical scales for a given cylinder bore size. The horizontal scale of Chart 4 is graduated for values of stroke which is the distance the piston must move to open the gate slide to clear the opening, usually gate diameter plus 3 inches. Having determined the cylinder and stroke requirements, an intersection of lines projected from these values will establish a point on Chart 4 from which reservoir capacity can be interpolated. A standard reservoir of this size or larger is required to keep the pump full.

5. Pumps

Every hydraulic gate control system will have a hand pump, alone, or as an auxiliary to a powered unit. The requirement is simple: to develop the required pressure in the cylinder with a reasonable force on the handle. The rate of flow will be dependent on the operator.

The pump for a powered installation will be selected according to pressure requirement of the system, about as follows:-

Pressure Required	Pump Type
to 1200-1500 psi	gear
to 2000-2500 psi	vane
to 2000-3000 psi	axial-piston

Electric power is more convenient to control and economical if it is reliable and available close to the installation. A gasoline engine can be adapted to any location. Either type should drive the pump at the proper speed. See Design Details.

6. Valves

A four-way rotary-type selector valve will provide the required control and sealing characteristics for the majority of SCS installations. Port sizes will depend on the tubing to be used. Other choices are concerned with the type of circulation patterns.

For Conditions	
Handpowered system single cylinder	- use closed-center
Powered system single cylinder	- use open-center to allow for free oil return to tank
Powered system multiple cylinder	- use closed-center valves with pilot-operated relief valve as by-pass

7. Tubing

The basic requirements of tubing are (1) to contain maximum working pressure, (2) to pass the required flow with reasonable friction loss, and (3) to resist the environmental conditions in which it must be placed. The following are guides for this selection:

For Conditions	
Enclosed - above water	- use carbon steel tubing
	or
Exposed to weather	- use carbon steel tubing (plated or coated)
	or
Conduit enclosed (submerged)	- use pressure hose SAE ($100R_1$ or $100R_2$)
Direct burial (submerged)	- use stainless steel

Refer to manufacturers' catalogs for pressure ratings of tubing or hose in different sizes.

8. Fluid

The hydraulic fluid should be selected on the recommendations of the component manufacturers for the conditions of climate and exposure in the vicinity of the installation.

V. DESIGN DETAILS

A. Mechanical System

Several of the necessary accessories to a mechanical system are described in the following figures and illustrated at such a scale that they may be traced full size or assembled with other selected details for photographic reproduction, as described in Section H.

1. Gate Stem Encasement Selection Chart, Figure D-2

Figure D-2 is of value only where an unencased stem is being given serious consideration. Omitting the encasement results in economy only when the pedestal spacing exceeds some limiting dimension.

Entering Figure D-2 with the unencased stem spacing obtained from Figure D-1 and moving vertically till it intersects the selected stem diameter will provide a rapid answer. An intersection in the unshaded zone indicates an unencased stem is cheaper; in the shaded zone, the encased stem is cheaper.

Approximate costs per foot of stem for either type installation may be taken from this chart. The line forming the boundary between the shaded and unshaded areas pertains to the encased stem. Its intersection with the stem diameter lines approximates the construction cost. For the unencased stem, intersection of the pedestal spacing with the stem diameter regardless of the zone it is in approximates the construction cost.

2. Gate Stem Details, Figures D-3, D-4

Figures D-3 and D-4, Gate Stem Details, pictures the typical installations of encased gate stems and details of splices for both types. D-3 details are used on drawings that are to be reduced for reproduction. D-4 details are of a suitable scale for direct use on drawings to be used full size. The table on D-3 contains dimensions and other values necessary to complete the details in either scale.

3. Gate Stem Pedestal, Figure D-5

Figure D-5, Gate Stem Pedestal, illustrates the recommended pedestal for support of any size gate stem at any spacing. Either of three guides may be used as shown in Figures D-6, D-7 or D-8. As noted on the drawings, riprap should not cover an unencased stem.

4. Gate Stem Guide and Vent Pipe Hanger, Figures D-6, D-7, D-8

Figures D-6, D-7 and D-8, Gate Stem Guide and Vent Pipe Hanger, show three devices for mounting gate stem to pedestals.

D-6 uses standard U-bolts and channel section and requires no welding.

D-7 uses steel bars bent and drilled to support the stem, encasement and vent pipe.

D-8 illustrates a stem guide typical of those supplied by gate manufacturers, usually of cast iron, and available with bronze bushings as an option. This type is designed to fit closely to a gate stem and ordinarily is not intended for use with encasement.

5. Gate Lift Pedestal, Figure D-9

Figure D-9, Gate Lift Pedestals, provides outline dimensions and quantities for the sizes A through E referred from Figure D-1.

Drawings 7-L-20544 (A-E) listed in the table show construction details including reinforcing steel for each size and are included on Figures D-10 thru D-14. On sized D and E the cranks are oriented to require the least stooping or bending of the operator.

6. Handwheel Bracket and Base Plate, Figures D-15, D-16, D-17

Figure D-15 thru D-17, Handwheel Bracket Base Plate, give detailed dimensions for fabrication of brackets and base plates for mounting lifts on pedestals.

B. <u>Hydraulic System</u>

Some details of installation that differ from a mechanical system are shown in Figure D-22, Typical Details. It is most important to note the relationships of dimensions Eg and Ey

to make a secure fastening to the gate slide and to provide adequate clearance for slide and frame in all parts of the operating cycle. Modification of the stem block is needed to permit threading the block to the piston rod without turning the piston in the cylinder or turning the cylinder itself. The wrench flats are located (dimension Eg) so as to be accessible for holding the rod during the entire threading operation.

The simplest installation uses a flange mount cylinder attached to a yoke on the gate frame. This assembly can be fabricated, assembled and tested under shop conditions before field installation. A side foot mount is applicable in many cases but anchor bolts must be located carefully to avoid difficult field adjustments. A steel plate, slotted for the anchor bolts, serve as an intermediate adjustable mounting on which to bolt this type cylinder. A third method, using the trunnion mount, has built-in flexibility in one plane of movement and can be used to advantage in special situations, (limited head room) as illustrated.

Safety devices for the system itself are suggested in the following order:

1. A pressure gage, marked with the design opening and closing pressures, will be sufficient for a handpowered system and competent operator.

2. Pressure relief valves, set for design opening or closing pressures and placed in the respective side of the circuit, guard against excess pressures applied by unknowing or unauthorized hand operators or an unattended power unit.

3. A travel limit circuit allows oil to bypass the cylinder when the gate is completely open or closed and eliminates the continuous blowoff of the relief valves if a powered unit is not continuously watched during operation.

For a power installation, additional calculations are required. The power requirement is set by the amount of work and the time allowed.

From the previous example of a 30" x 30" gate, the work for one inch of gate movement was 14,600 inch pounds. Assuming a maximum allowable time for opening of 5 minutes, the power is found in this manner:

$$HP = \frac{Work}{Time}$$

$$HP = \frac{(14{,}600 \text{ in-lb})\ (32 \text{ in.})}{(12\ \frac{in}{ft})\ (in)\qquad (5 \text{ min})\ \frac{(33{,}000 \text{ ft-lb})}{\text{min HP}}}$$

$$= 0.236 \text{ HP}$$

The oil flow requirement of the system for opening the gate is:

$$Vol = \frac{(6.811 \text{ in}^2)\ (32 \text{ in.})}{(5 \text{ min})}$$

$$= 43.6 \text{ cu in. per minute}$$

A typical pump for such an installation will deliver about 1.2 cubic inches of oil per revolution. The required speed of the pump is then:

$$Rev = \frac{(43.6 \text{ in}^3)}{(1.2\ \frac{in^3}{rev})}$$

$$= 36.4 \text{ revolutions per minute}$$

An electric motor of 1/4 or 1/3 HP rating should be adequate for this intermittent use. The common motor speed of 1,760 rpm must be reduced to the 36 rpm of the pump by gear, chain or belt drive. Without speed reduction the pump would attempt its full output against the operating pressure of the cylinder resulting in an overload on the power unit.

The remote location of most reservoirs suggests the use of a gasoline engine. The usual procedure for selecting a gasoline engine is to require 50% more power than the load. For the example, however, there are few choices available less than about 2 HP. As with the electric motor, the speed must be reduced to the speed of the pump.

When a hand pump is used as an auxiliary to a powered pump, it must be installed parallel to the powered pump and the discharge line of each guarded by a check valve against back-flow induced by the other unit.

Ideally the control station circuitry and the cylinder assembly at the gate should be shop assembled by workmen with hydraulics equipment experience. Both assemblies can then be tested and adjusted under shop conditions. Quick couplers might be used for the final connections reducing much of the

mess and the hazard of contamination usually attendant with field assembly. This approach to the installation process should result in compact, neat assemblies, fully tested and ready for service.

Sample specifications for the usual items of hydraulic equipment are included in Section VII as a guide for bid preparation.

VI. EXAMPLE

Continuing the example of the previous sections, the following procedure illustrates the selection of additional details required on the construction drawings. This example assumes the drawings will be reduced from "E" size (21 x 30) to "L" size (10 1/2" x 15").

This example in detail selection is restricted to the mechanical system of controls since no standard details have been developed for the hydraulic alternate.

Given: The earth dam example of Section B, with choices of 20" steel pipe, 21" R/C pipe or 24" CMP, and a head of 20 ft.

Determine: The size of the gate control components for each of the three pipe sizes and details for the construction drawings.

Problem Analysis:

1. Find stem diameter required.
2. Find stem pedestal spacing required.
3. Find lift pedestal size required.
4. Find lift type required.
5. Find vent pipe size required.
6. Determine construction drawing details.
7. Find requirements of an alternate hydraulic control system for comparison with the mechanical system.

Solution:

1. Since a stock gate is available for each of the conduit sizes, three solutions are possible. Enter Figure D-1 with the conduit diameter plus three inches and a 20'-0" depth of water to gate centerline.

2. The inlet structure size was selected in Section C. The rest of the components tabulated below can be obtained from Figure D-1.

Item \ Conduit Dia	20" Steel	21" R/C	24" CMP
Conduit dia + 3"	23"	24"	27"
Inlet structure size	G	H	H
Stem diameter	1 1/2"	1 1/2"	1 1/2"
Stem pedestal spacing			
Encased	16'-0"	16'-0"	16'-0"
Unencased	10'-6"	10'-6"	10'-0"
Lift pedestal size	C	C	C
Lift type	30" handwheel	24" handwheel (ball bearing)	30" handwheel (ball bearing)
Alternate hydraulic control	consider	consider	consider

3. In the mechanical system the only alternate choice is between the encased and unencased stem. The encased stem is selected because of icing conditions and burial of the stem in rock riprap placed on the embankment for erosion protection. For the remainder of the control details, select the following common to all three pipe sizes:

Gate stem details	Figure D-3
Gate stem pedestal	" D-5
Gate stem guide	" D-6
Lift pedestal	
Concrete quantity and Std Dwg No.	" D-9
Base plate detail	" D-16

Circled blanks on Figure D-3 indicate information that is to be filled in. The stem diameter was previously found to be 1 1/2". The following related information is found on Figure D-3.

a. Stem splice 1 1/2" x 9" heavy wall seamless steel tubing
b. Rivets 2 - 5/8 x 3"
c. Encasement 2 1/2" standard galvanized pipe
d. Oil 0.627 qts of SAE 20 motor oil per foot of encasement

On Figure D-6, in addition to the information related to the stem diameter listed on the same figure, a 2" vent pipe was found required for this job from Figure C-6.

4. The procedure for selecting the alternate hydraulic controls is presented using the 24" CMP pipe from the previous example.

Assume a 24" rectangular gate weighing approximately 200#, average for this type of gate.

a. Enter Figure D-21 with the area enclosed by the gate seats (24 + 3)(24 + 3) = 5.06 ft^2 and H = 20 ft and find the intersection point. From this point move diagonally down to the right along the 45° grid to about 200# gate weight. Move horizontally from this point to find 4700# thrust.

b. The required stroke is 24 + 4 = 28". Using a front end cylinder mount the unsupported rod length, L, is 28" plus extra length required by the gate slide frame. This extra distance according to the catalogues reviewed is about 1/4 the gate size. Therefore, using 6" plus 2" for clearance at the cylinder support the total unsupported rod length is then 28 + 6 + 2 = 36".

c. Enter Figure D-21, Chart 3 with thrust = 4700 lbs and L = 36" and find a 2" bore with an oversize rod. Also find operating pressure in the 2000 to 3000 psi zone.

d. Enter Figure D-21, Chart 4 using the 28" stroke and a 2" cylinder bore size with an oversized rod and find the required reservoir capacity of 50 cubic inches.

e. Using Figure D-23 and requiring a front trunnion mount, the following cylinder makes and models can be used:

   1. Carter model no. ENS
   2. Hannifin model no. D-H10
   3. Miller model no. H81

f. The example installation can be easily operated by a hand pump. For the 3000 psi requirement, select a pump with about a 3/4 in. piston. Displacement for each comfortable stroke will be about 0.25 cu in. and about 6.5 strokes will move the gate up one inch. Several pumps meeting these requirements are obtainable with integral reservoirs that are equal to or greater than the minimum capacity requirement of 45 cu in.

g. Assuming that the hydraulic lines are to be buried separately from the air vent, stainless steel is the required material. 1/4 inch diameter would carry the required flow of oil but 3/8 inch will probably justify its extra cost in effort saved. Wall thickness should be 0.028 inches.

h. Select a four-way rotary selector valve ported for 3/8 tubing. For this hand-powered installation a closed center will give the desired circulation pattern.

VII. SAMPLE MATERIAL SPECIFICATION

A. Hydraulic Controls

SAMPLE MATERIAL SPECIFICATION

310. HYDRAULIC CONTROLS

1. SCOPE

This specification covers the quality of hydraulic controls for slide gates.

2. GENERAL REQUIREMENTS

The hydraulic controls, including cylinder, pump, valves, lines and fittings, shall conform to the requirements of the Joint Industry Conference (JIC) Hydraulic Standards for Industrial Equipment, Revised April 1959.

3. CYLINDER

The cylinder shall be selected from the JIC Interchangeable Series rated for 2000 psi operating or 3000 psi non-shock loading.

The piston rod shall be stainless steel with threads and wrench flats machined as required to meet mounting requirements as shown on the drawings.

Seals for the piston and the rod bearing shall be the multiple-V type or shall have equivalent sealing characteristics. A metallic external wiping ring shall be incorporated with the rod bearing.

4. PUMP

A hand operated pump shall be capable of developing the design pressure with not more than 60 pounds force on the handle. It shall be equipped with a check valve to prevent backflow between power strokes.

A pump for use with engine or electric motor drive shall deliver oil at the specified rate and pressure without overload on the power unit. The pump and power unit shall be aligned so that bearing loads, stresses in connecting elements and losses due to friction are no greater than for normal power transmission.

5. RESERVOIR

A reservoir shall be supplied with capacity as specified or shown in the drawings. Provision shall be made for filtering the

hydraulic fluid during filling. Piping for the return flow shall enter the reservoir below the normal operating level of the field. A breather hole shall be provided and shall be protected by an air cleaner.

6. VALVES

All valves shall have a working pressure rating at least equal to the maximum operating pressures of the system.

The control valve shall be a 4-way rotary selector valve of the disc type, equipped for oil service. The seals shall limit internal leakage to 1 drop per minute at the rated pressure. External leakage shall be zero. The center shall be open or closed as specified or shown on the drawings.

Relief valves shall be adjustable within the range of 50% to 100% of maximum rated pressure. The adjustment shall be secured by a locknut or protective cover.

Bypass valves, when included in a travel limit circuit, shall have capacity equal to the pumping rate of the system for normal operation.

7. HYDRAULIC LINES

All hydraulic lines shall have working pressure ratings at least equal to the maximum operating pressure of the system with a safety factor (based on bursting strength) of 4.

Hydraulic lines that will be located under water or inaccessible for regular inspection shall be stainless steel tubing or pressure hose of synthetic rubber or plastic with wire or synthetic fiber reinforcing. Fittings for either tubing or hose shall be stainless steel. Hose fittings shall be permanently attached by factory methods. Fittings shall allow no leakage and shall not unduly restrict flow in the passages they connect.

For that part of the piping protected from the weather and accessible for regular inspection seamless carbon steel tubing can be used. Fittings shall have corrosion protection of cadmium plating or equal. If dissimilar metals must be joined, protection against galvanic corrosion shall be provided.

Metallic hose couplings that will be dragged into place in a conduit shall have a wrapping of coal-tar tape of thickness sufficient to provide a water proof cover after installation.

8. HYDRAULIC FLUID

Hydraulic fluid shall be supplied in accordance with the manufacturer's recommendations for the equipment supplied and the operating conditions stated under Construction Details.

9. INSTALLATION INSTRUCTIONS

The manufacturer shall submit complete installation data including instructions for adjustment for all components supplied for this system.

10. PAINTING

Each item of equipment shall have paint protection for all metal except stainless steel or electroplated metallic surfaces.

The cylinder and other components that will be submerged shall have protection against such exposure. In the absence of a paint option certified by the manufacturer for such conditions, these items will be painted by System I under Specification 22, Cleaning and Painting Metalwork.

Other components, housed in the control station, shall have paint coatings equal to Paint System D or E under Specification 22.

B. Installing Hydraulically Operated Slide Gates

SAMPLE CONSTRUCTION SPECIFICATION

210. INSTALLING HYDRAULICALLY OPERATED SLIDE GATES

1. SCOPE

The work shall consist of furnishing and installing hydraulically operated slide gates, complete with all controls and other necessary appurtenances.

2. MATERIALS

The gates and controls furnished shall conform to the requirements of Material Specifications 128, 134 and 300. All gates shall be furnished complete with hydraulic hoisting equipment and other necessary appurtenances.

3. INSTALLING GATES

The Contractor shall install the gates in a manner that will prevent leakage around the seats or binding of the gates during operation.

Surfaces of metal against which concrete will be placed shall be unpainted and free from oil, grease, loose mill scale, surface rust and other debris or objectionable coatings.

Anchor bolts, thimbles and spigot frames shall be secured in true position in the forms and held in alignment during the placement of concrete.

Concrete surfaces against which rubber seals will bear or against which flat frames or plates are to be installed shall be finished to provide a smooth and uniform contact surface. When flat frames are installed against concrete, a layer of bedding mortar shall be placed between the frame and the concrete.

4. INSTALLING HYDRAULIC ASSEMBLY

The hydraulic cylinder, pump, valves, connecting lines and fittings shall be installed in accordance with the manufacturer's recommendations and as shown on the drawings, unless otherwise approved by the Engineer.

The cylinder shall be mounted as shown on the drawings. Alignment shall be established so that neither gate nor cylinder will bind during any phase of operation.

5. OPERATIONAL TESTS

After the gate and hydraulic lift assembly have been installed, they shall be cleaned, lubricated and otherwise serviced by the Constractor in accordance with the manufacturer's instructions.

The gate will be required to maintain a set position for twenty-four (24) hours with a maximum permissible movement due to internal leakage of 0.25 inches. The Contractor shall test the gate and hydraulic lift assembly by operating the system several times throughout its full range of operation. He shall make any changes and adjustments that are necessary to insure satisfactory operation of the gate system subject to approval of the Contracting Officer.

6. MEASUREMENT AND PAYMENT

The work will not be measured. Payment for the hydraulically operated slide gate assembly will be made at the contract lump sum price. Such payment will constitute full compensation for all labor, materials, equipment and all other items necessary and incidental to the completion of the work including furnishing and installing anchor bolts, housing and all specified appurtenances and fittings.

7. TYPICAL CONSTRUCTION DETAILS AND ITEMS OF WORK

Class of gate - 00-00 (seating - unseating head)
Type of frame (flat, spigot, flange, etc.)
Type and size of opening (square, round, etc.)
Type of wedge (cast iron, bronze, etc.)
Type of seating surfaces (cast iron, bronze, etc.)
Special gate requirement (self contained, nonrising stem, flush bottom opening, etc.)
Type, capacity of hydraulic control system

The stem block shall be shaped so as to turn in the gate recess for threading to the piston rod.

The maximum operating pressure for this system (opening) will be _____ psi.

The operating pressure for closing will be ____ psi.

The range of temperature for operation of this system will be from -____ ^{o}F to +____ ^{o}F.

The cylinder shall have _____" bore, _____" stroke _____ mounting style. Piston rod extensions, wrench flat and port locations shall be included as detailed on the drawings.

The pump shall have a pressure capability of _____ psi. Volume of flow shall be in the range _____ (gpm, cu in/min) to _____ (gpm, cu in/min).

The reservoir shall have a minimum capacity of _____ cubic inches.

The control valve shall have a (n) (closed or open) center and ports shall be size _____ with straight threads.

The relief valves shall be adjustable within the range of _____ psi to _____ psi. The initial setting(s) shall be _____ psi (___, ___, ___, respectively) as detailed on the drawings.

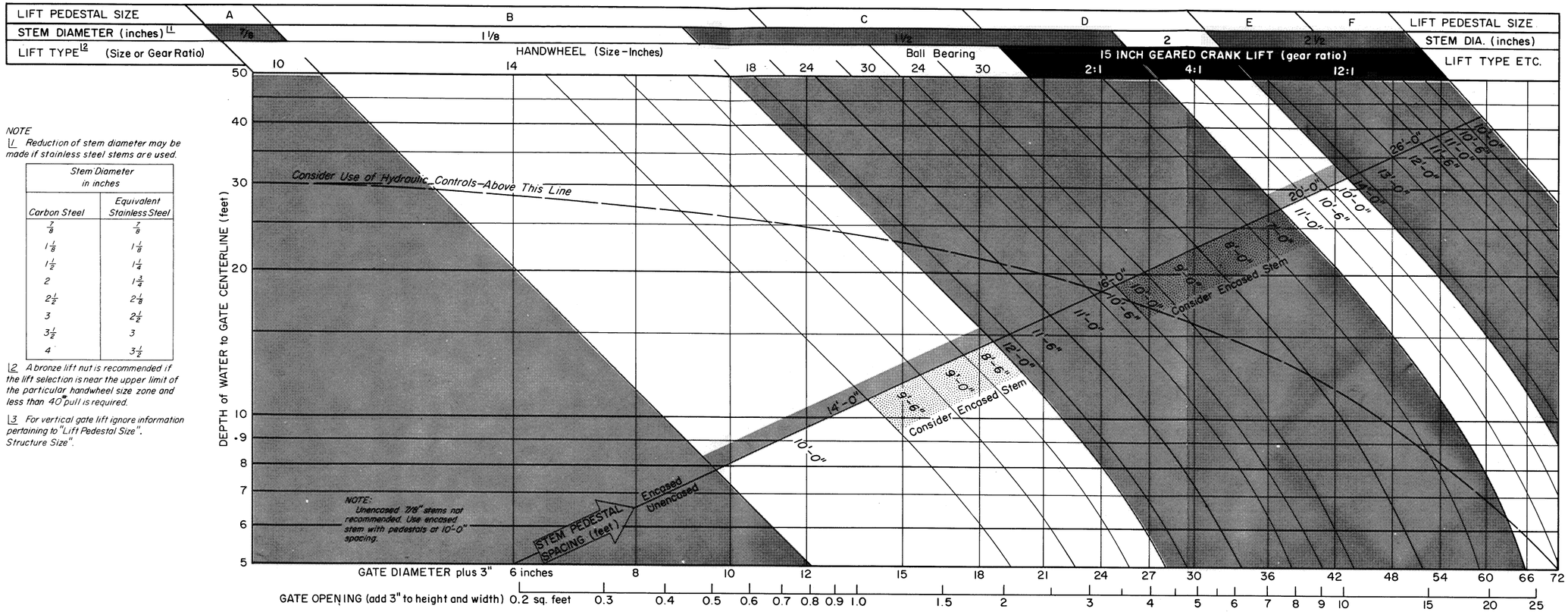

NOTE

1 Reduction of stem diameter may be made if stainless steel stems are used.

Stem Diameter in inches	
Carbon Steel	Equivalent Stainless Steel
7/8	7/8
1 1/8	1 1/8
1 1/2	1 1/4
2	1 3/4
2 1/2	2 1/8
3	2 1/2
3 1/2	3
4	3 1/2

2 A bronze lift nut is recommended if the lift selection is near the upper limit of the particular handwheel size zone and less than 40# pull is required.

3 For vertical gate lift ignore information pertaining to "Lift Pedestal Size", "Structure Size".

SELECTION CHART

EXAMPLE PROBLEM

GIVEN

1. Outlet Conduit Diameter 21"
2. Maximum Water Depth to Centerline of Gate 20'

PROCEDURE

1. Enter Maximum Water Depth (20')
2. Enter Gate Dia. (21") + 3" = 24"

FIND

- Lift Pedestal Size C
- Gate Stem Diameter 1 1/2"
- Lift Handwheel Diameter or Gear Ratio 24" Ball Bearing
- Stem Pedestal Spacing (select one)
  - a. Encased Stem 16'-0"
  - b. Unencased Stem 10'-6"
- Use of hydraulic controls should be investigated.

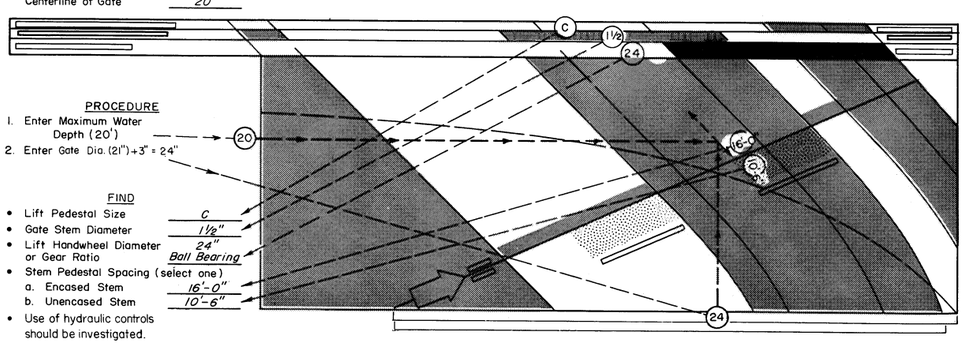

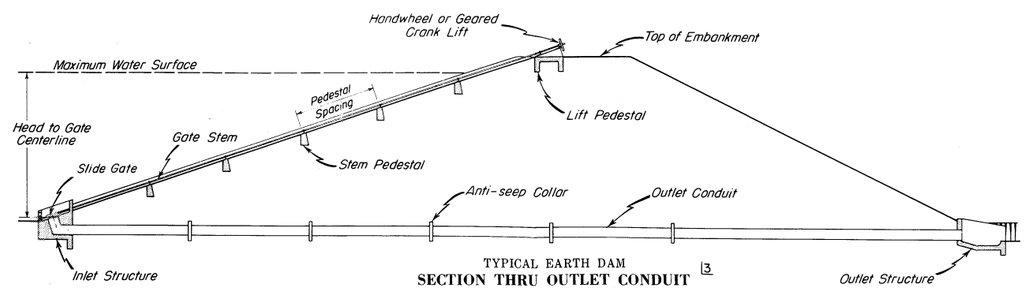

TYPICAL EARTH DAM
SECTION THRU OUTLET CONDUIT 3

FIGURE D-1
GATE CONTROL SELECTION CHART
EWPU Portland, Oregon

U. S. DEPARTMENT OF AGRICULTURE, SOIL CONSERVATION SERVICE

M7-E-16731-N

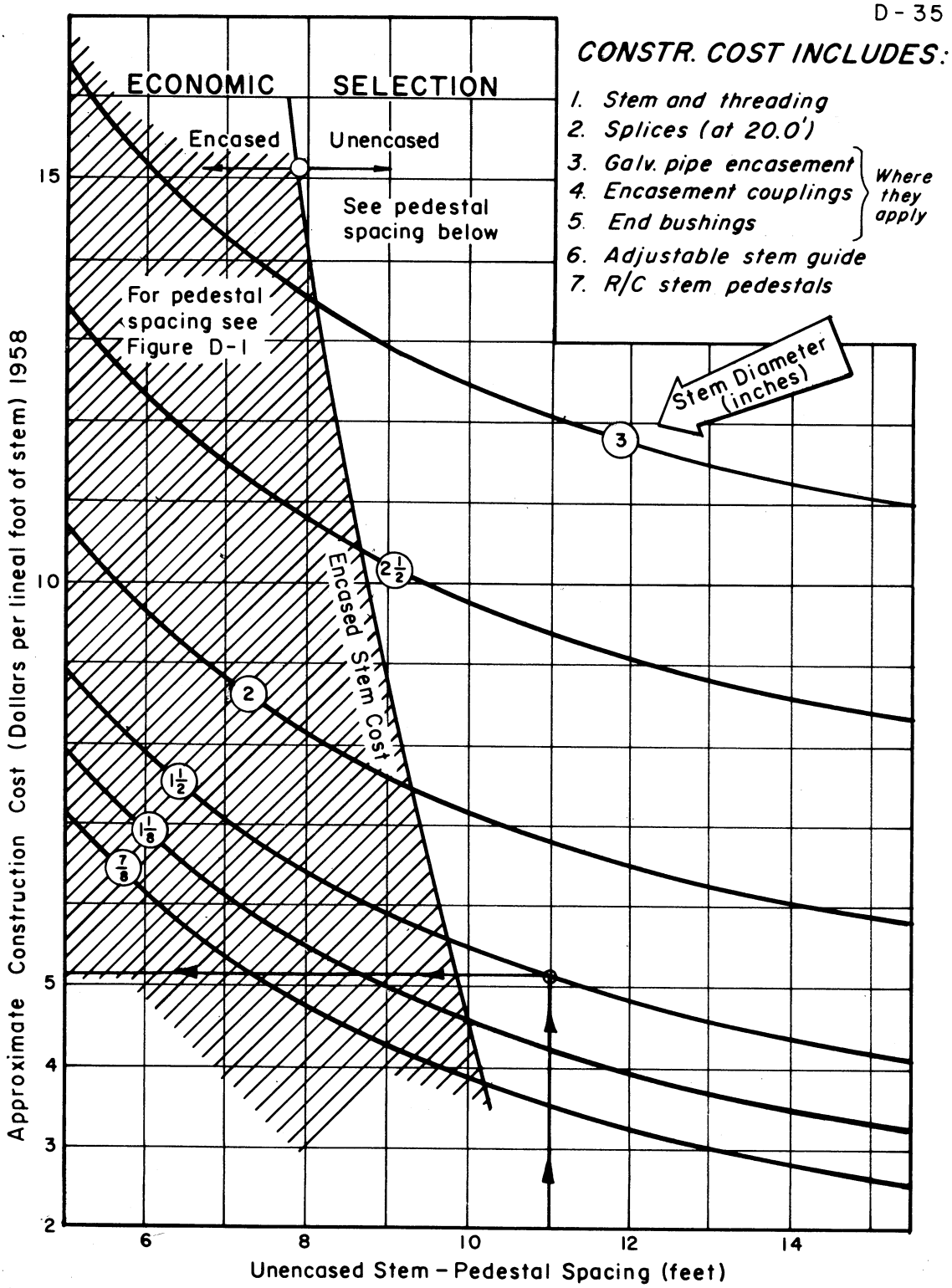

Note:

Enter this chart with the unencased stem pedestal spacing and stem diameter required to satisfy the head-gate size relation shown in Figure D-1.

FIGURE D-2

GATE STEM ENCASEMENT SELECTION CHART

EWP Unit Portland, Oregon

STEM [1] DIA.	HEAVY WALL [2] SEAMLESS STEEL TUBING	ENCASED STEM: RIVETS	ENCASED STEM: ENCASING PIPE DIA.	ENCASED STEM: SIZE OF PACKING	ENCASED STEM: VOL. OIL QTS./FT.	UNENCASED STEM: SQ HEAD MACH. BOLTS
$\frac{7}{8}$"	$1\frac{1}{4}$" O.D. $\frac{15}{16}$" I.D. x 7"	2- $\frac{3}{8}$" x 2" Countersunk	$1\frac{1}{4}$"	$\frac{3}{16}$"	0.184	2- $\frac{3}{8}$" x $1\frac{3}{4}$"
$1\frac{1}{8}$"	$1\frac{5}{8}$" O.D. $1\frac{3}{16}$" I.D. x 8"	2- $\frac{3}{8}$" x $2\frac{3}{8}$" "	2"	$\frac{3}{8}$"	0.488	2- $\frac{3}{8}$" x $2\frac{1}{4}$"
$1\frac{1}{4}$"	$1\frac{7}{8}$" O.D. $1\frac{5}{16}$" I.D. x 9"	2- $\frac{1}{2}$" x $2\frac{3}{4}$" "	$2\frac{1}{2}$"	$\frac{5}{8}$"	0.743	2- $\frac{1}{2}$" x $2\frac{1}{2}$"
$1\frac{1}{2}$"	$2\frac{1}{8}$" O.D. $1\frac{9}{16}$" I.D. x 9"	2- $\frac{5}{8}$" x 3" "	$2\frac{1}{2}$"	$\frac{1}{2}$"	0.627	2- $\frac{5}{8}$" x $2\frac{3}{4}$"
$1\frac{3}{4}$"	$2\frac{3}{8}$" O.D. $1\frac{13}{16}$" I.D. x 10"	2- $\frac{3}{4}$" x $3\frac{3}{8}$" "	3"	$\frac{5}{8}$"	1.031	2- $\frac{3}{4}$" x $3\frac{1}{4}$"
2"	$2\frac{3}{4}$" O.D. $2\frac{1}{8}$" I.D. x 10"	2- $\frac{3}{4}$" x $3\frac{3}{4}$" "	3"	$\frac{1}{2}$"	0.878	2- $\frac{3}{4}$" x $3\frac{3}{4}$"
$2\frac{1}{2}$"	$3\frac{1}{2}$" O.D. $2\frac{5}{8}$" I.D. x 11"	2- 1" x $4\frac{5}{8}$" "	4"	$\frac{3}{4}$"	1.632	2- 1" x $4\frac{1}{2}$"
3"	$4\frac{1}{2}$" O.D. $3\frac{1}{8}$" I.D. x 12"	4- 1" x $5\frac{1}{2}$" "	5"	1"	2.688	4- 1" x $5\frac{1}{2}$"

[1] Should be constant diameter for full length although material changes from stainless to carbon steel.

[2] Two-thirds of the sleeve splice shall project beyond the upper stem.

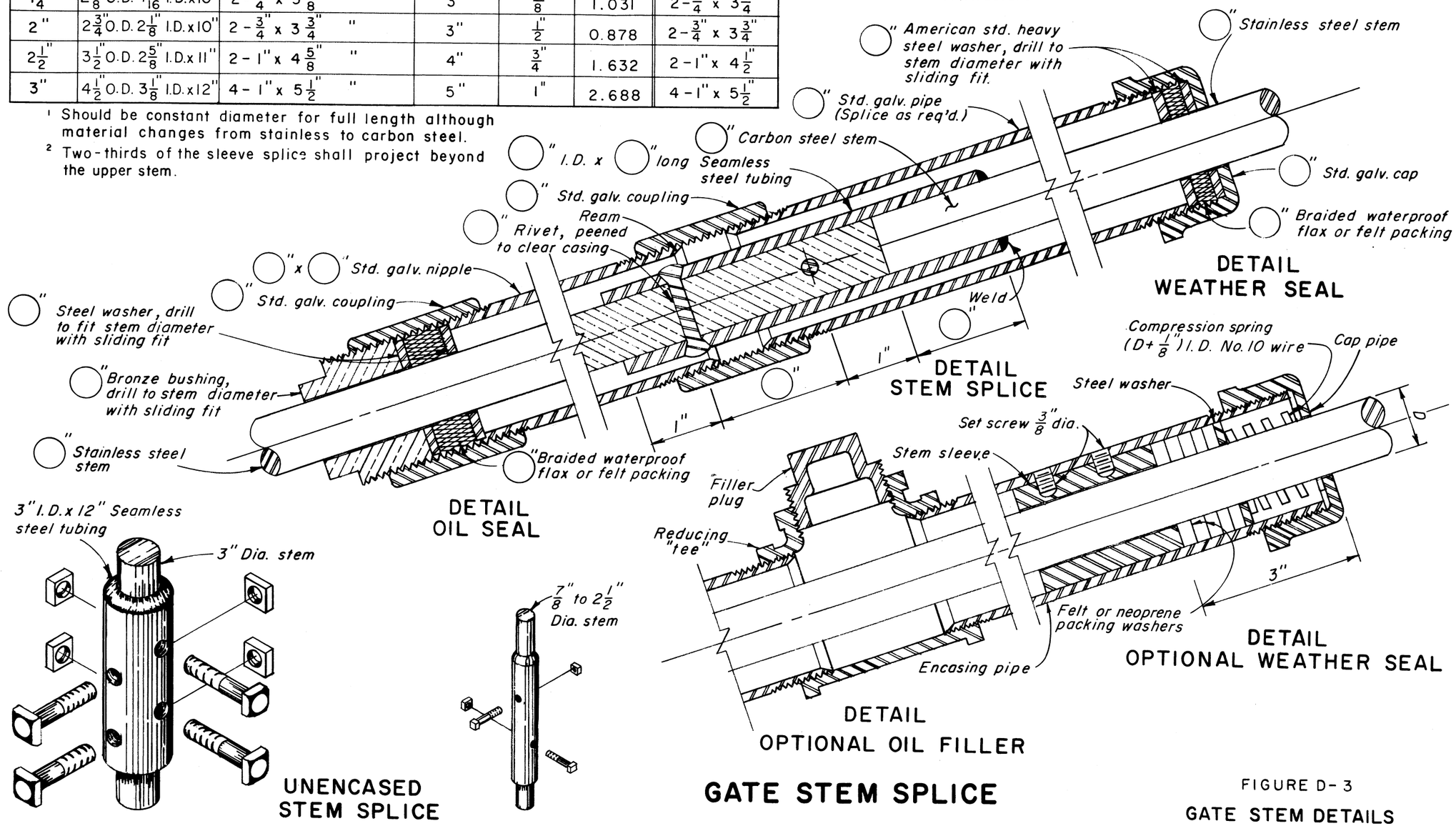

FIGURE D-3

GATE STEM DETAILS

EWP Unit Portland, Oregon

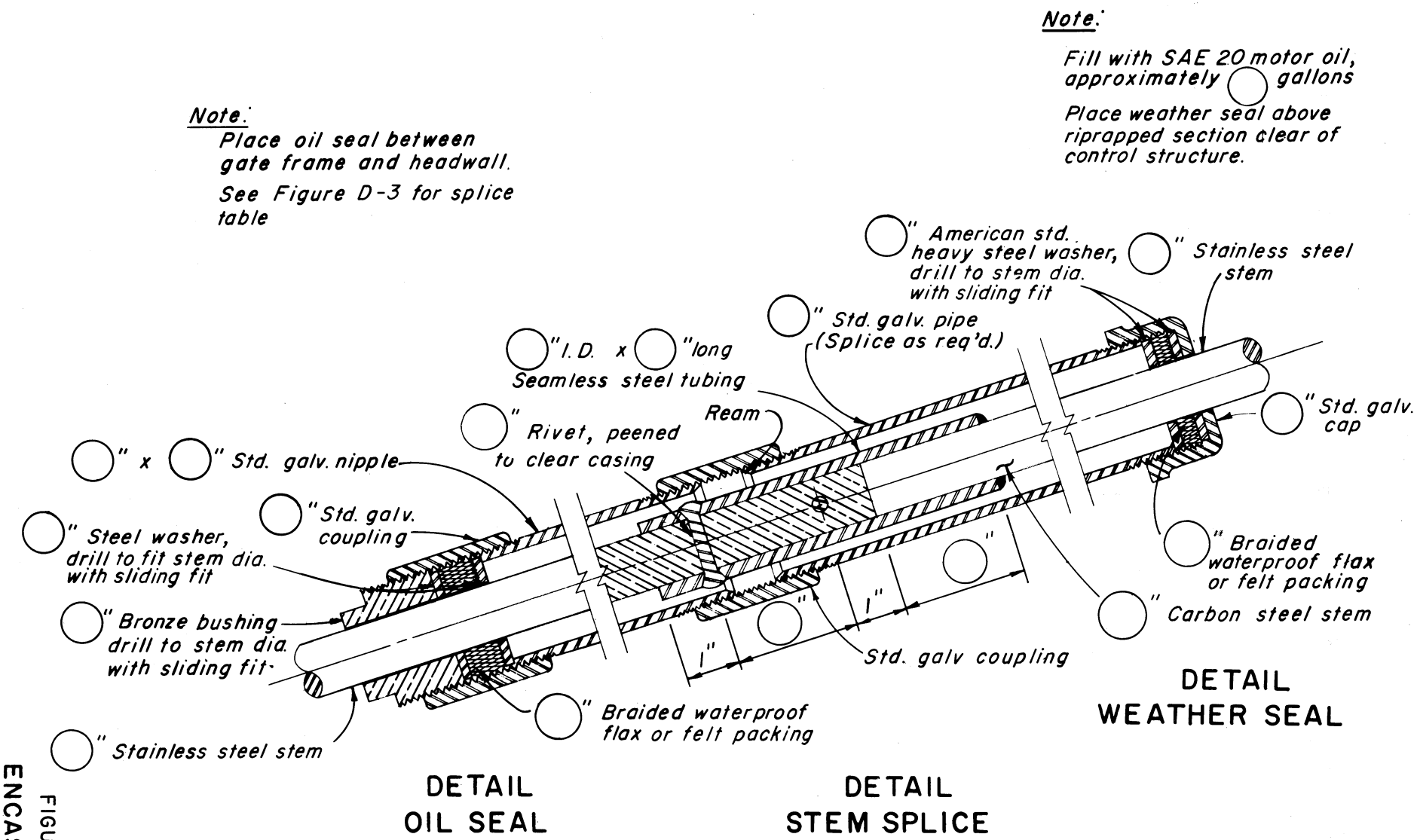

FIGURE D-4
ENCASED GATE STEM DETAILS
EWP Unit Portland, Oregon

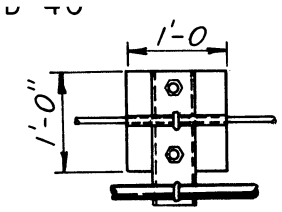

PLAN

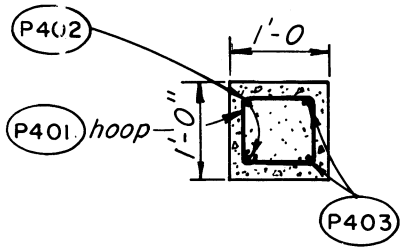

PLAN

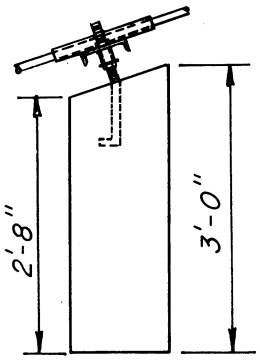

SIDE ELEVATION

UNENCASED

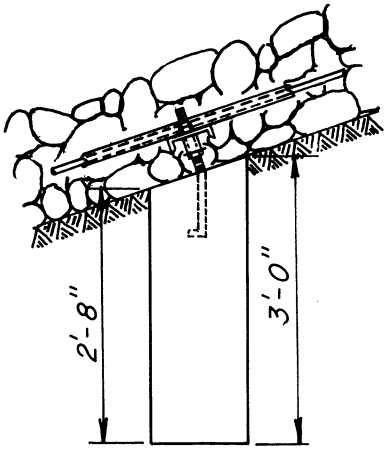

SIDE ELEVATION

ENCASED

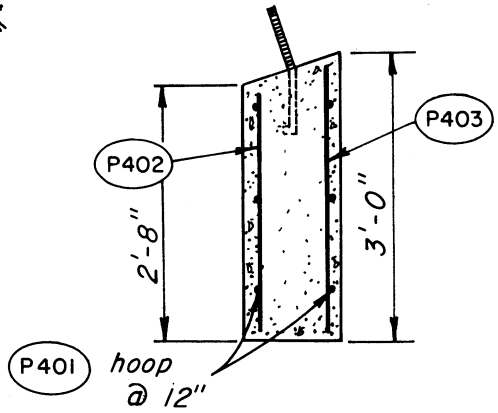

SECTIONAL ELEVATION

GATE STEM PEDESTAL

Note:

Location and spacing of anchor bolts vary with type of stem guide used. See Fig. D-6, D-7, D-8.

Concrete volume = 0.105 cu. yds.

Reinforcing steel = 13.682 lbs

STEEL SCHEDULE

Location	Mark	Size	Quan.	Length	Type	A	B	C	Total Length
GATE STEM PEDESTAL									
	P401	4	3	3'-0"	T1	0'-2"	0'-8"	0'-8"	9'-0"
	P402	4	2	2'-3"	Str				4'-6"
	P403	4	2	2'-9"	Str				5'-6"

Use when construction drawings are to be reduced one half size

STEEL SCHEDULE

Location	Mark	Size	Quan.	Length	Type	A	B	C	Total Length
GATE STEM PEDESTAL									
	P401	4	3	3'-0"	T1	0'-2"	0'-8"	0'-8"	9'-0"
	P402	4	2	2'-3"	Str				4'-6"
	P403	4	2	2'-9"	Str				5'-6"

Use when construction drawings are to be reproduced full size

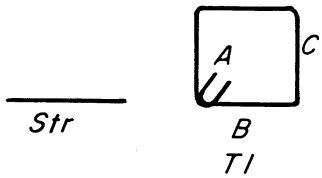

BAR TYPES

FIGURE D-5

GATE STEM PEDESTAL

EWP Unit Portland, Oregon

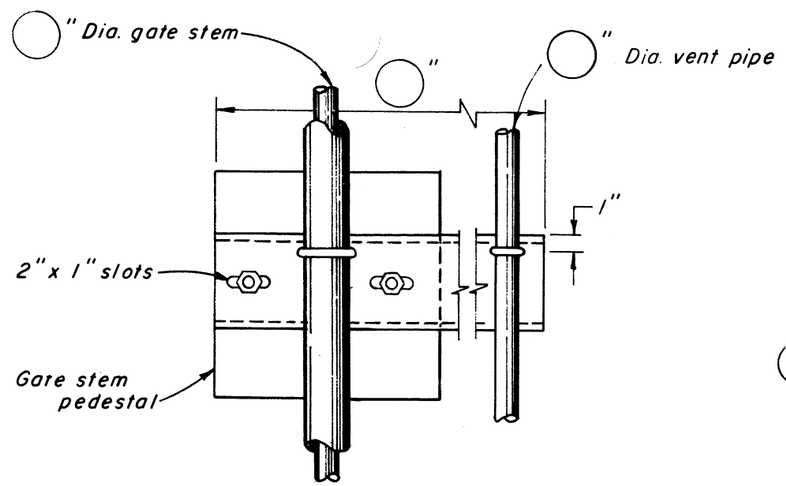

PLAN

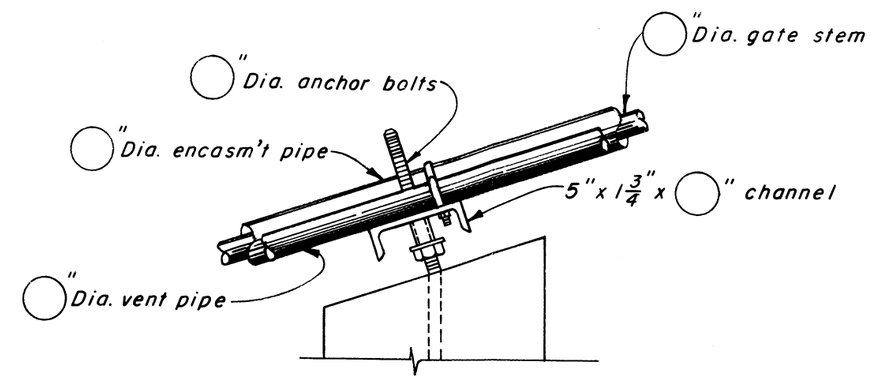

SIDE VIEW

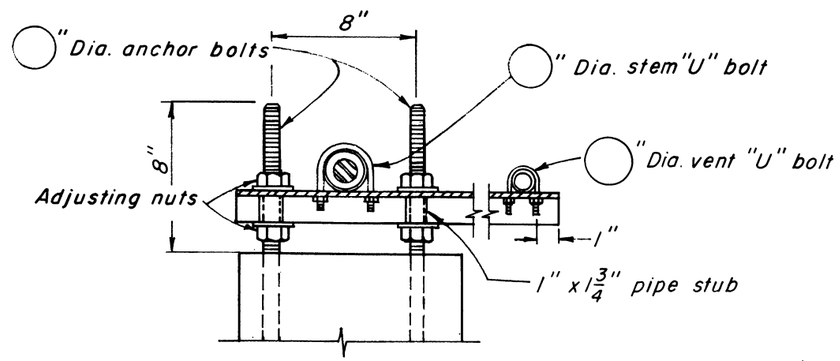

ELEVATION

STEM DIA.	ENCASM'T PIPE* DIA.	CHANNEL SIZE 9#/FT.	ANCHOR BOLT	"U" BOLT SIZE (STEM)	"U" BOLT SIZE (VENT)
7/8"	1 1/2"	5" x 1 3/4" x 15"	3/4" x 18"	1 1/2" x 3/8"	Variable See Figure C-6 for vent diameter
1 1/8"	2"	5" x 1 3/4" x 16"	3/4" x 18"	2" x 3/8"	
1 1/2"	2 1/2"	5" x 1 3/4" x 18"	3/4" x 18"	2 1/2" x 1/2"	
2"	3"	5" x 1 3/4" x 19"	3/4" x 18"	3" x 1/2"	
2 1/2"	4"	5" x 1 3/4" x 20"	7/8" x 18"	4" x 1/2"	

*Std. galv. pipe

Note:
For unencased stem use 12" pipe stub, the same diameter as encasing pipe, through "U" bolt clamp.

GATE STEM GUIDE

Not to Scale

FIGURE D-6

ADJUSTABLE STEM GUIDE AND VENT PIPE HANGER

EWP Unit Portland, Oregon

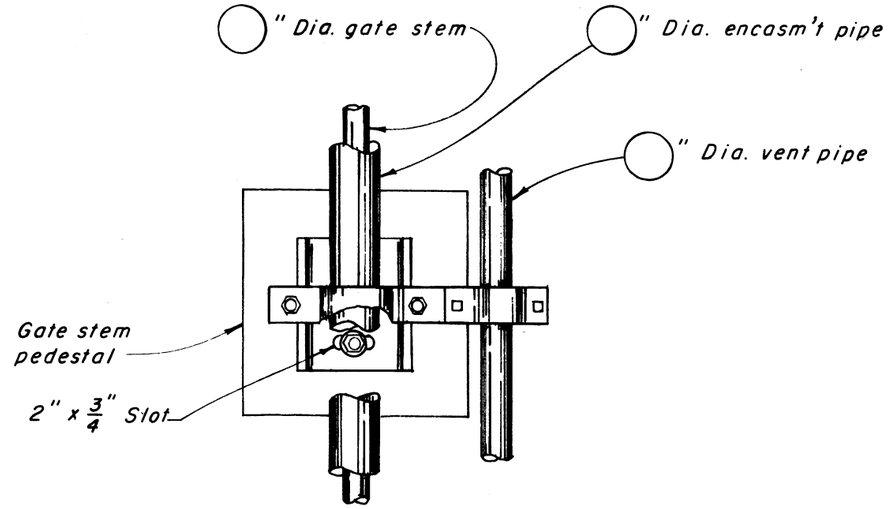

PLAN

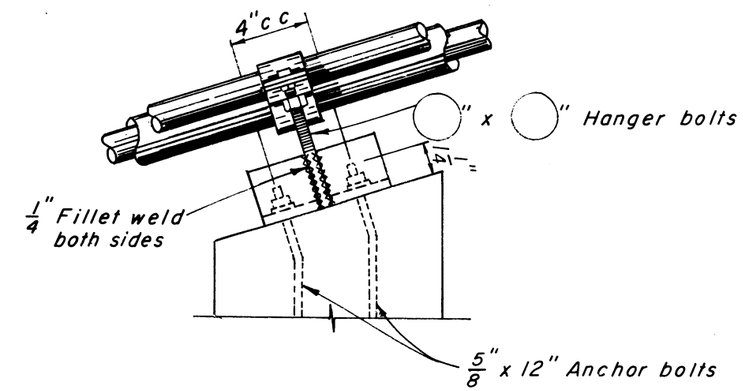

SIDE VIEW

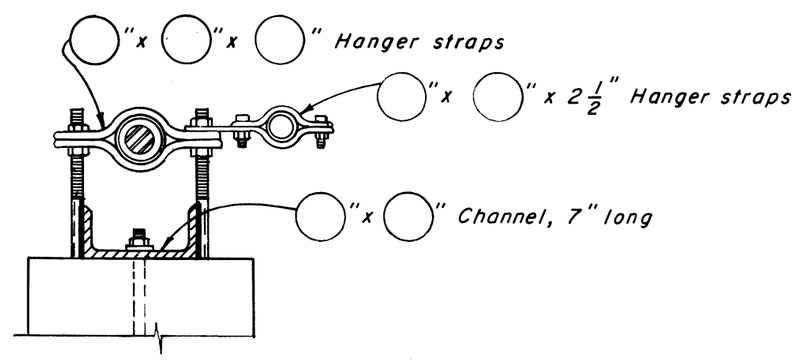

ELEVATION

STEM DIA.	ENCASM'T PIPE* DIA.	CHANNEL SIZE (7" long)	HANGER⊗ STRAP SIZE	HANGER BOLTS
7/8"	1 1/4"	6" x 3" - 16.3#	1 1/4" x 1/4" x 2"	3/4" x 8"
1 1/8"	2"	6" x 3" - 16.3#	2" x 1/4" x 2"	3/4" x 8"
1 1/2"	2 1/2"	7" x 3" - 17.6#	2 1/4" x 3/8" x 2"	7/8" x 8"
2"	3"	7" x 3" - 17.6#	3" x 3/8" x 2 1/2"	7/8" x 8"
2 1/2"	4"	8" x 3 1/2" - 22.8#	4" x 1/2" x 2 1/2"	1" x 9"
3"	5"	9" x 3 1/2" - 25.4#	5" x 1/2" x 2 1/2"	1 x 9"

* Std. galv. pipe

⊗ Hanger bolt size and spacing requires larger straps than stock fittings provide

GATE STEM GUIDE

1' 0 1'
Scale in Feet

FIGURE D-7
ADJUSTABLE STEM GUIDE AND VENT PIPE HANGER
EWP Unit Portland, Oregon

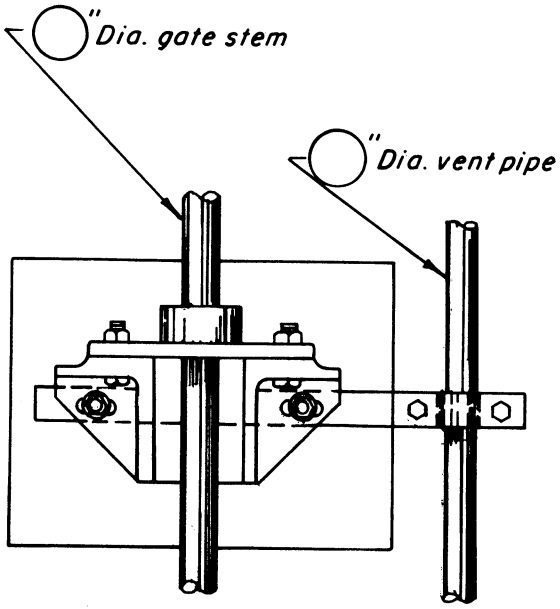

PLAN

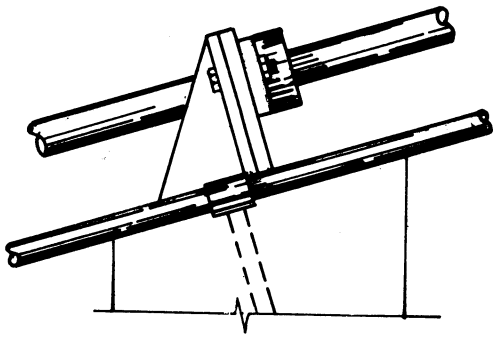

SIDE VIEW

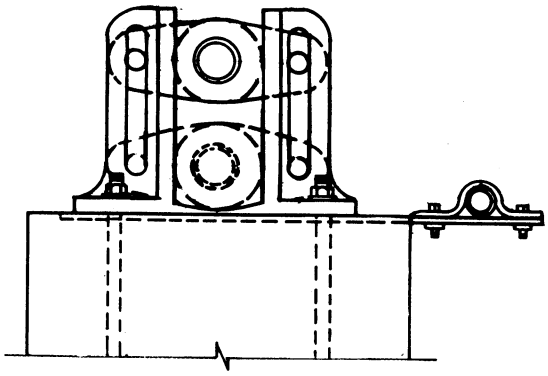

ELEVATION

Note:

Refer to gate supplier's catalog for size selection

GATE STEM GUIDE

Not to Scale

FIGURE D-8

ADJUSTABLE STEM GUIDE AND VENT PIPE HANGER

EWP Unit Portland, Oregon

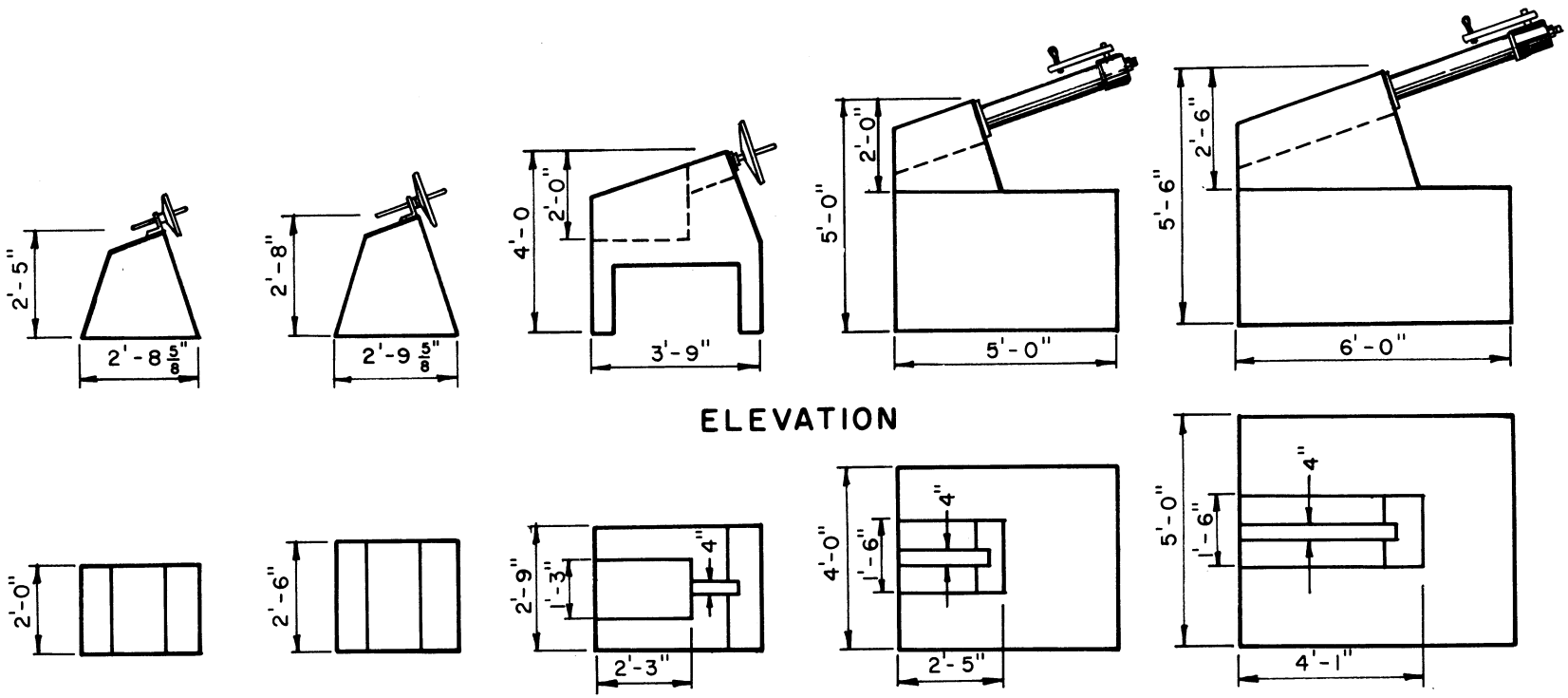

SIZE Ⓐ Ⓑ Ⓒ Ⓓ Ⓔ

SIZE	LIFT CAPACITY	VOLUME CONCRETE	REINF. STEEL	REFER TO DRG. NO. 7-L-20544 A THRU E	BASE PLATE DETAIL FIG.
Ⓐ	200#	0.27 cu. yds.		Fig. No. D-10	D-17
Ⓑ	800#	0.47 cu. yds.		Fig. No. D-11	D-17
Ⓒ	2,200#	0.74 cu. yds.	44.25#	Fig. No. D-12	D-18
Ⓓ	6,000#	2.41 cu. yds.	18.05#	Fig. No. D-13	D-19
Ⓔ	10,000#	3.70 cu. yds.	24.05#	Fig. No. D-14	D-19

FIGURE D-9
GATE LIFT PEDESTALS
EWP Unit Portland, Oregon

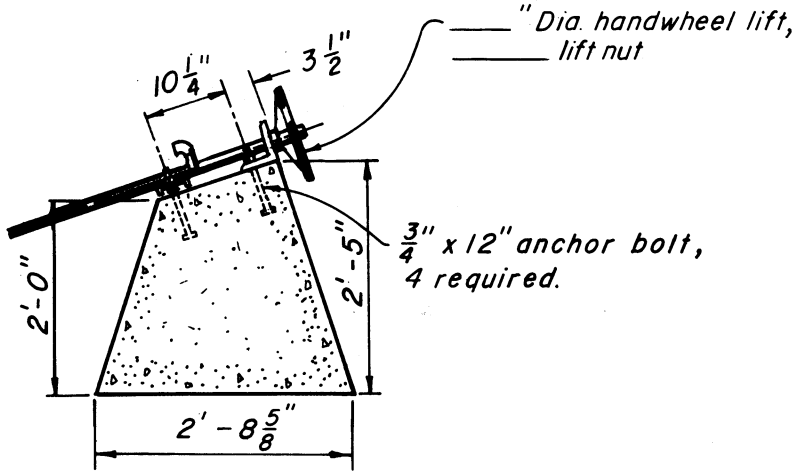

SECTIONAL ELEVATION

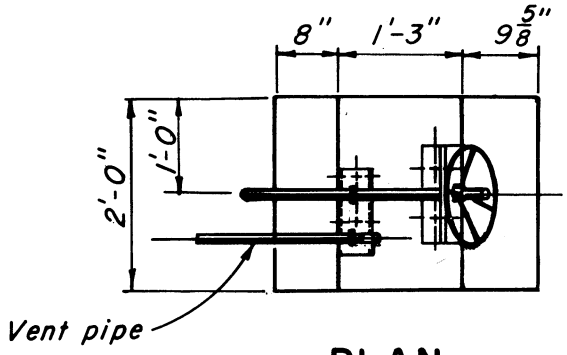

PLAN

GATE LIFT PEDESTAL

Note:

For lift selection and handwheel size refer to Figure D-1.

For handwheel bracket detail see Figure D-17

Specify bronze or cast iron lift nut

Inlet of vent pipe to consist of a screened (galv. 18 mesh) street ell and 90° ell securely fastened to the lift pedestal

FIGURE D-10
GATE LIFT PEDESTAL
SIZE A
EWP Unit Portland, Oregon

7-L-20544-A

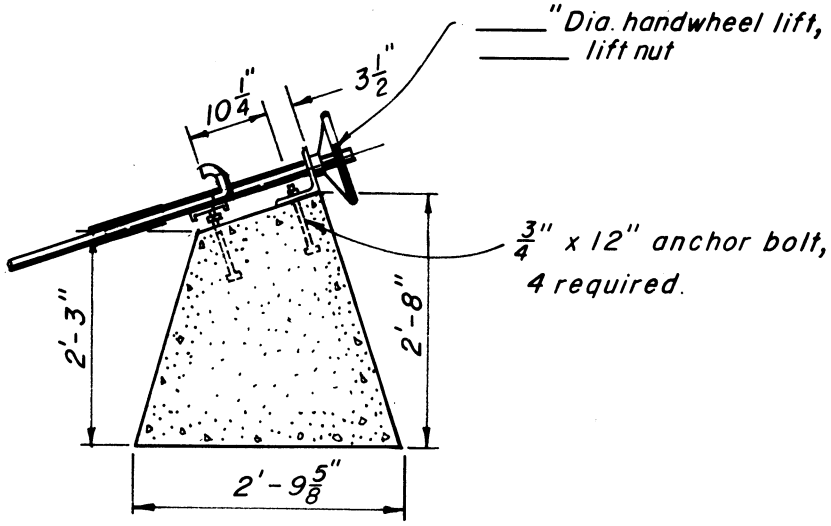

SECTIONAL ELEVATION

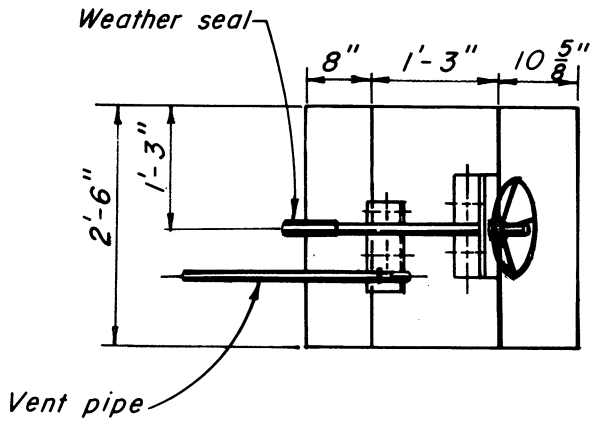

PLAN

GATE LIFT PEDESTAL

Note:

For lift selection and handwheel size refer to Figure D-1.

For handwheel bracket detail see Figure D-17

Specify bronze or cast iron lift nut

Inlet of vent pipe to consist of a screened (galv. 18 mesh) street ell and 90° ell securely fastened to lift pedestal

FIGURE D-11

GATE LIFT PEDESTAL

SIZE B

EWP Unit Portland, Oregon

7-L-20544-B

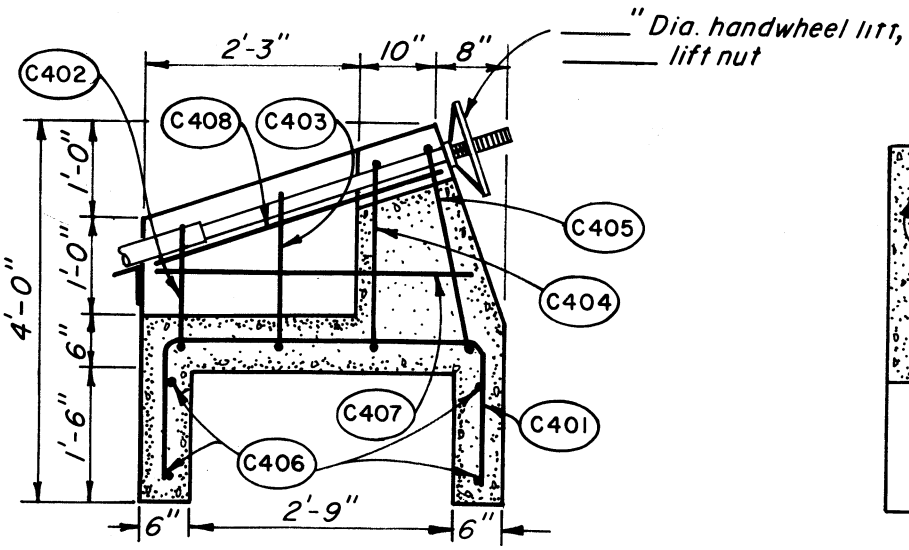

SECTIONAL ELEVATION

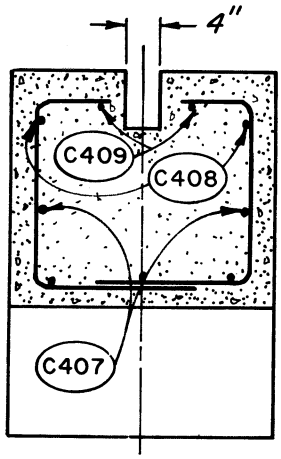

SECTION

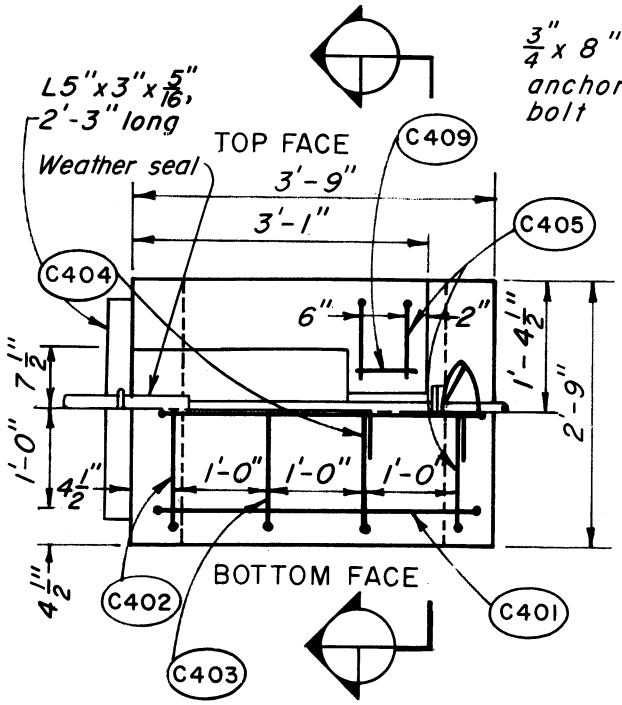

PLAN

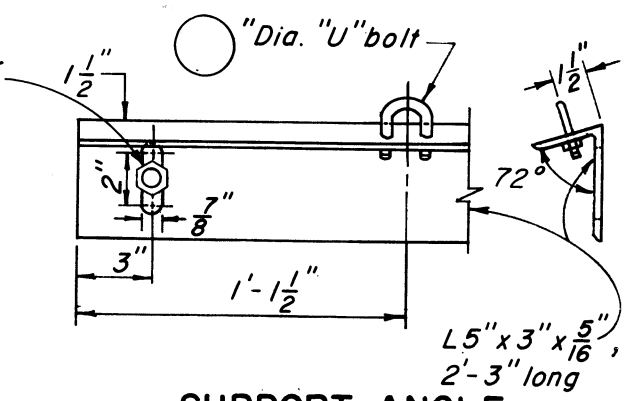

SUPPORT ANGLE DETAIL

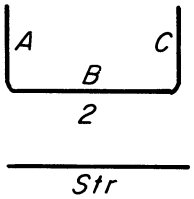

BAR TYPES

GATE LIFT PEDESTAL

For lift selection and handwheel size refer to Figure D-1

Specify bronze or cast iron lift nut

Refer to Figure D-6 for "U" bolt size

Refer to Figure D-15 or Figure D-16 for steel schedule

Vent pipe not shown. Inlet of vent pipe to consist of a screened (galv. 18 mesh) street ell and 90° ell securely fastened to the lift pedestal

FIGURE D-12

GATE LIFT PEDESTAL

SIZE C

EWP Unit Portland, Oregon

7-L-20544-C

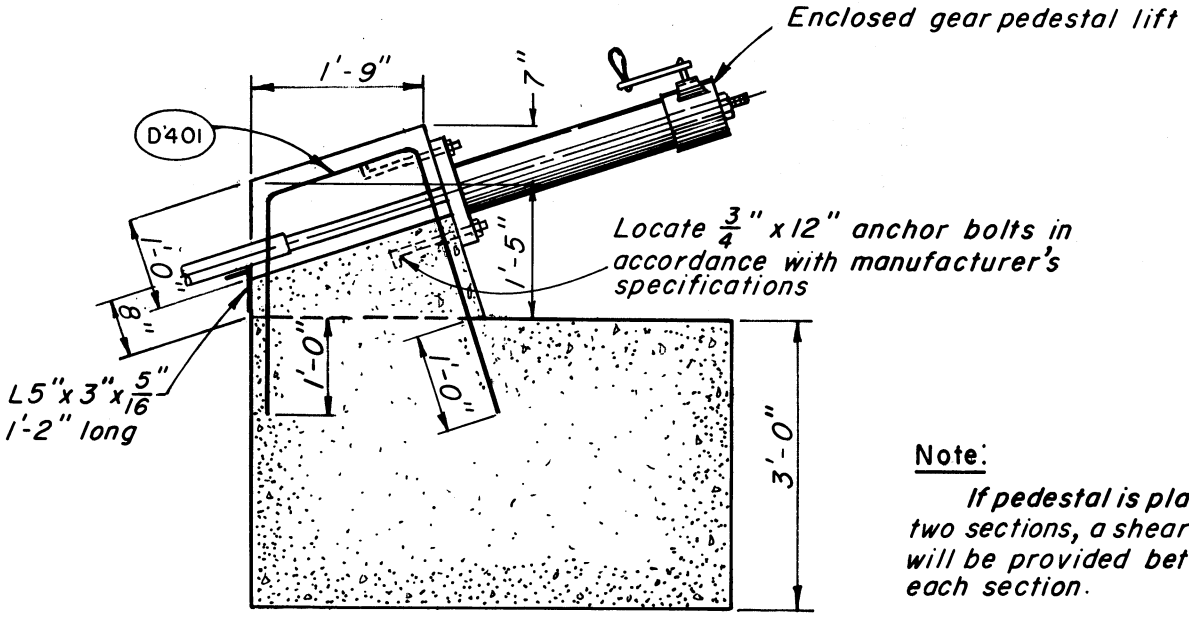

SECTIONAL ELEVATION

Note:

If pedestal is placed in two sections, a shear key will be provided between each section.

Vent pipe not shown place as required.

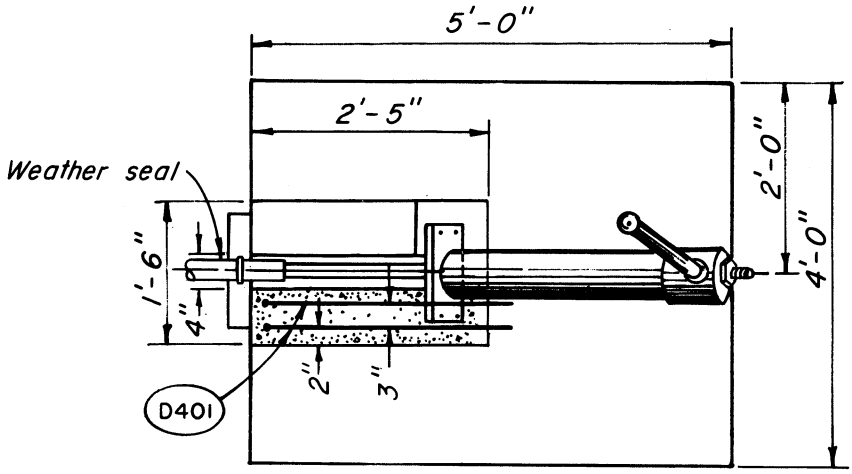

PLAN

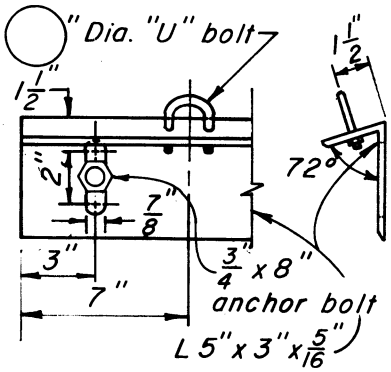

SUPPORT ANGLE DETAIL

GATE LIFT PEDESTAL

1 0 5
SCALE IN FEET

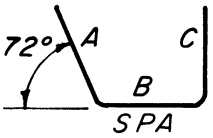

BAR TYPE

Note:

Refer to Figure D-6 for "U" bolt

For gear ratio see Figure D-1

Refer to Figure D-15 or D-16 for steel schedule

Vent pipe not shown. Inlet of vent pipe to consist of a screened (galv. 18 mesh) street ell and 90° ell securely fastened to the lift pedestal

FIGURE D-13

GATE LIFT PEDESTAL

SIZE D

EWP Unit Portland, Oregon

7-L-20544-D

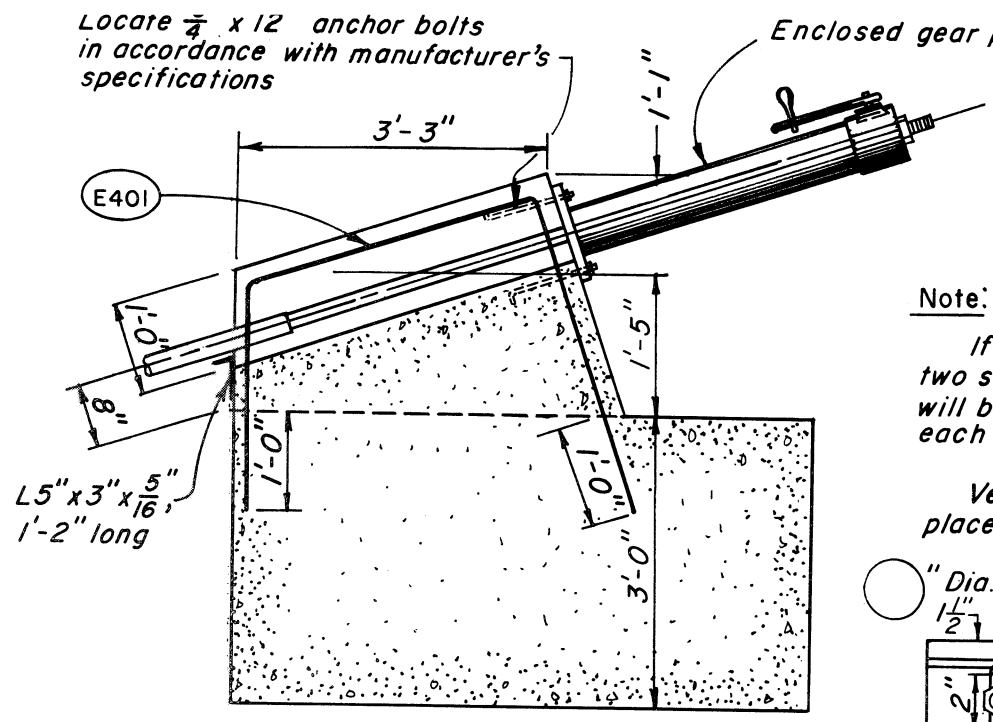

SECTIONAL ELEVATION

Note:

If pedestal is placed in two sections, a shear key will be provided between each section.

Vent pipe not shown, place as required.

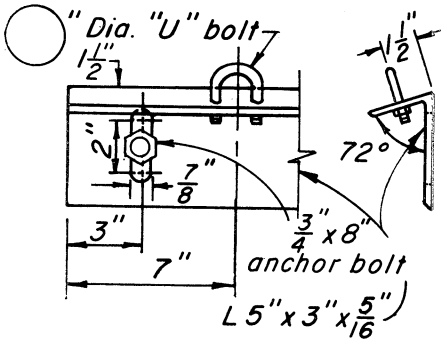

SUPPORT ANGLE DETAIL

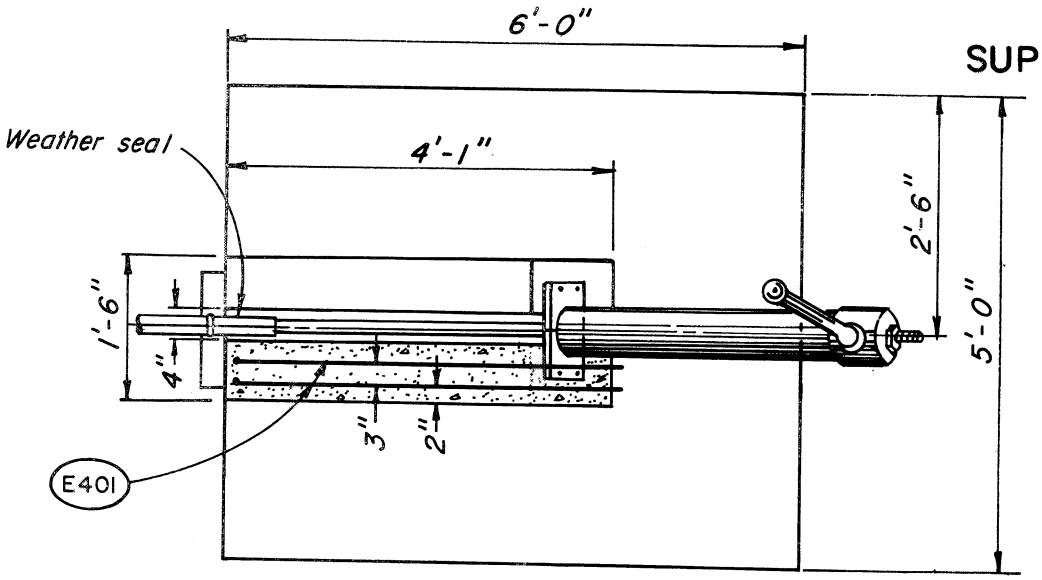

PLAN

GATE LIFT PEDESTAL

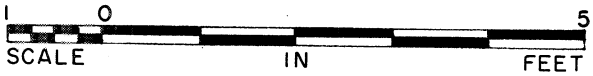

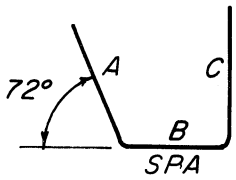

BAR TYPE

Note:

Refer to Figure D-6 for "U" bolt size
For gear ratio see Figure D-1
Refer to Figure D-15 or D-16 for steel schedule

Vent pipe not shown. Inlent of pipe to consist of a screened (galv. 18 mesh) street ell and 90° ell securely fastened to the lift pedestal

FIGURE D-14
GATE LIFT PEDESTAL
SIZE E
EWP Unit Portland, Oregon

7-L-20544-E

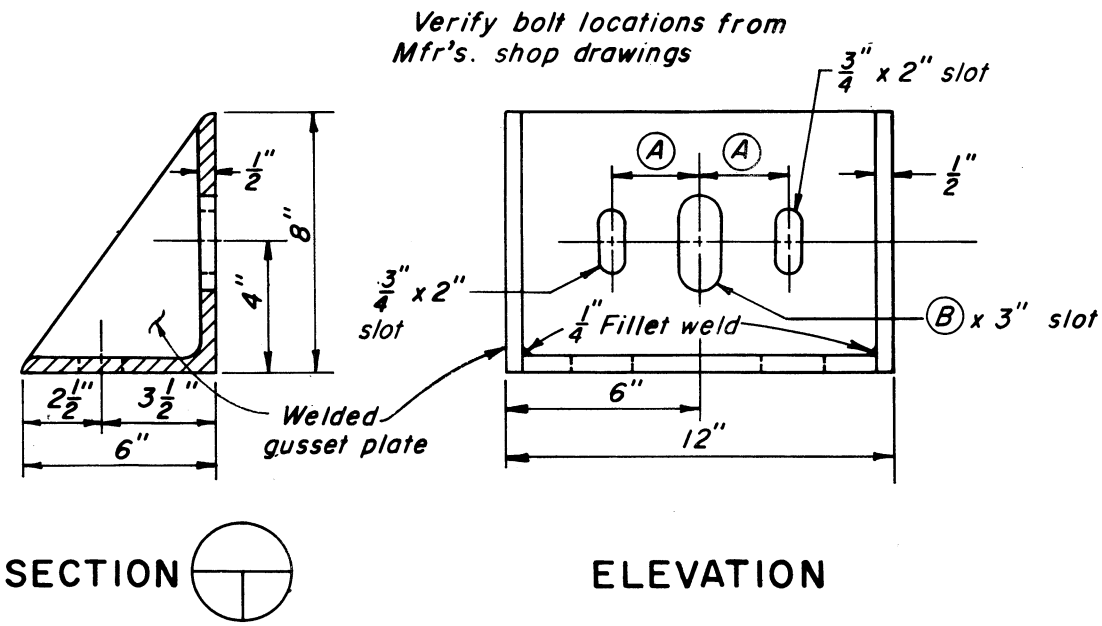

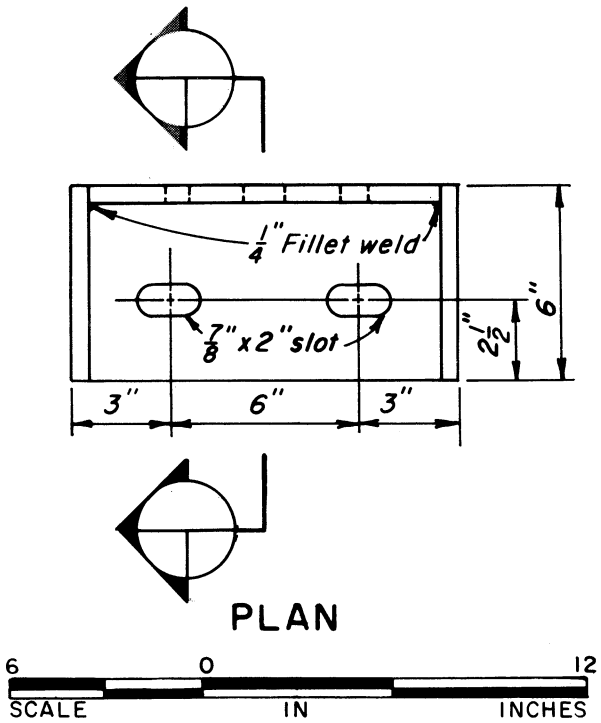

LIFT*	STEM DIA.	A	B
10	7/8"	2 3/4"	1"
14	1 1/8"	2 3/4"	1 1/4"
18	1 1/2"	3 1/2"	1 5/8"

* Handwheel diameter-inches

HANDWHEEL BRACKET

FIGURE D-15
HANDWHEEL BRACKET
FOR GATE LIFT PEDESTAL
SIZE A&B
EWP Unit Portland, Oregon

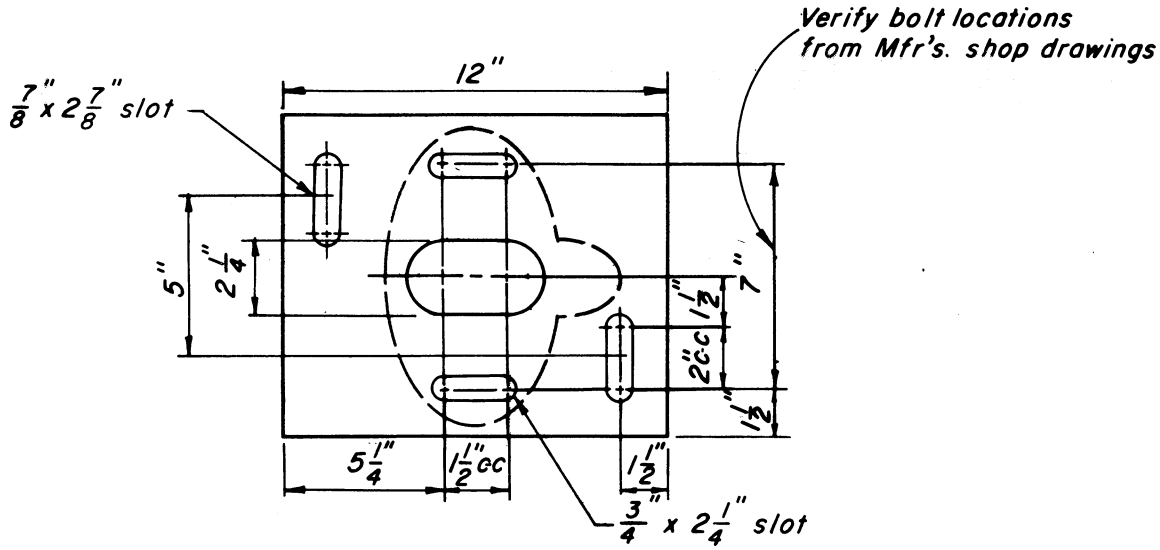

PLAN

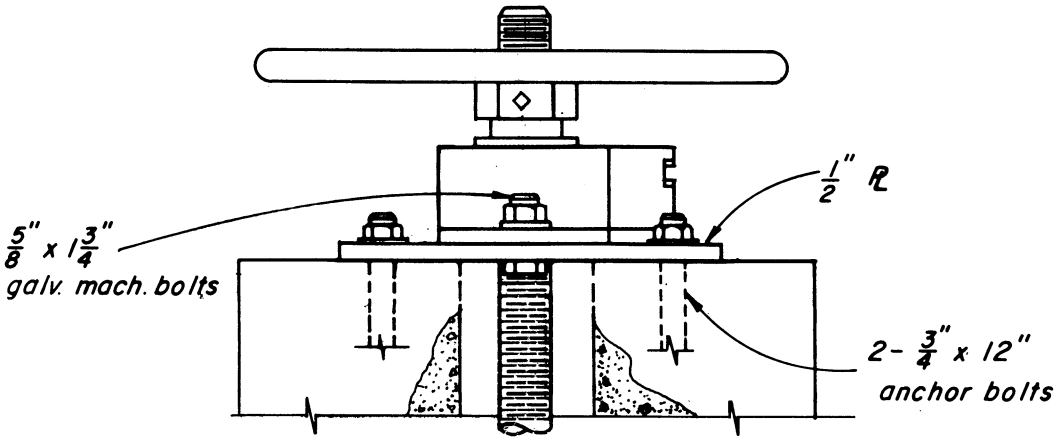

ELEVATION

BASE PLATE

FIGURE D-16
BASE PLATE FOR PEDESTAL SIZE C
FOR LIFTS ≦ HB 30
EWP Unit Portland, Oregon

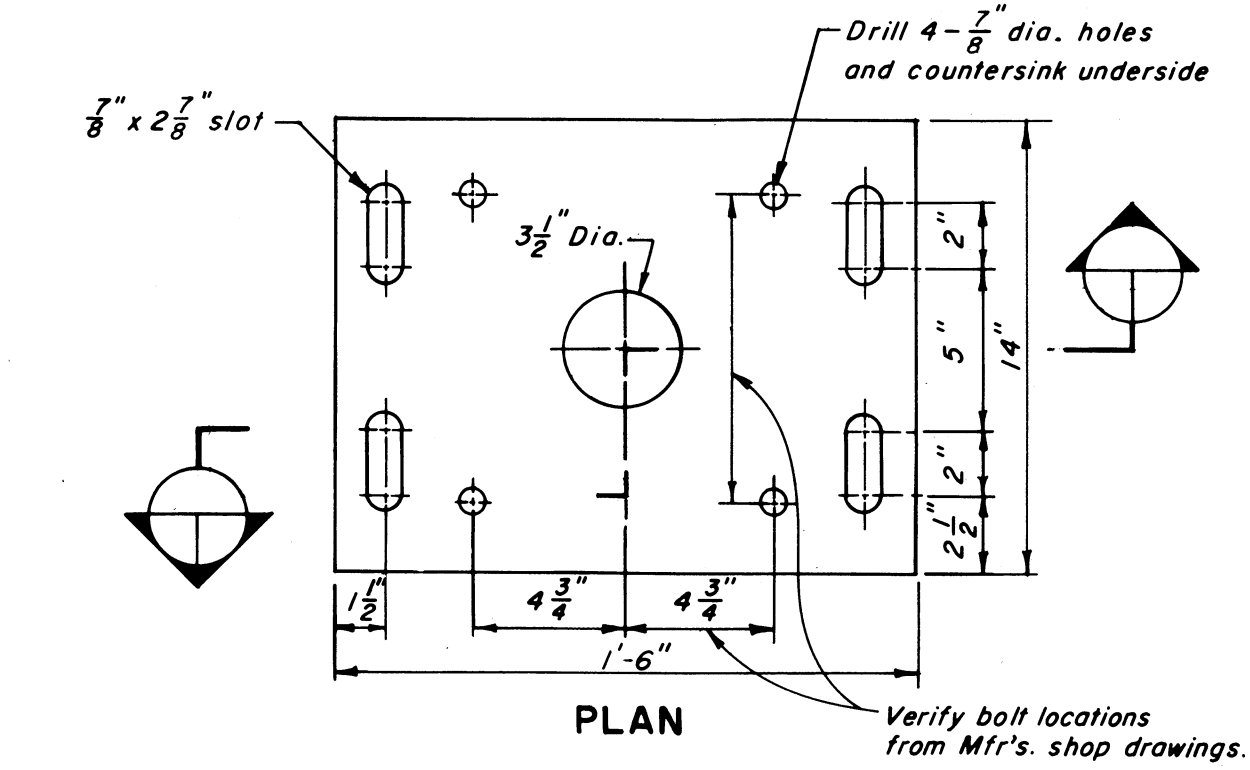

PLAN

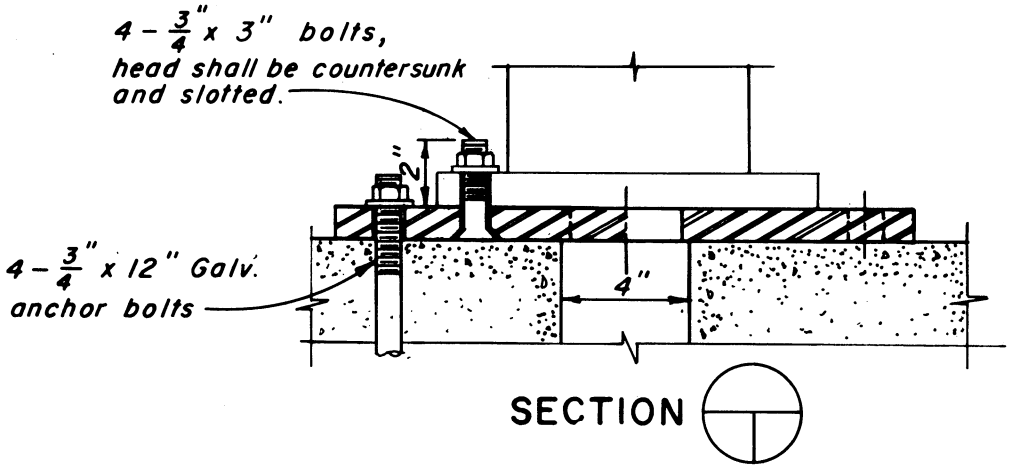

SECTION

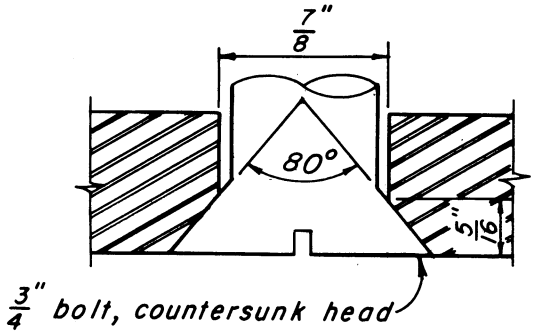

COUNTERSINK DETAIL

For Pedestal D, lift with gear ratio 4:1, use 3/4" plate.

For Pedestal E, lift with gear ratio 12:1, use 1" plate.

BASE PLATE

FIGURE D-17

BASE PLATE FOR GATE LIFT PEDESTALS SIZE D & E

EWP Unit Portland, Oregon

STEEL SCHEDULE									
Location	Mark	Size	Quan.	Length	Type	A	B	C	Total Length
GATE LIFT PEDESTAL									
Cutoff	C401	4	3	6'-3"	2	1'-6"	3'-3"	1'-6"	18'-9"
Sidewall	C402	4	1	4'-6"	2	1'-2"	2'-2"	1'-2"	4'-6"
"	C403	4	1	5'-0"	2	1'-5"	2'-2"	1'-5"	5'-0"
"	C404	4	2	4'-0"	2	1'-6"	1'-9"	0'-9"	8'-0"
"	C405	4	2	4'-3"	2	1'-6"	2'-0"	0'-9"	8'-6"
Cutoff	C406	4	4	2'-3"	Str				9'-0"
Sidewall	C407	4	2	3'-0"	Str				6'-0"
"	C408	4	2	2'-9"	Str				5'-6"
"	C408	4	2	0'-6	Str				1'-0"

GATE LIFT PEDESTAL SIZE C

STEEL SCHEDULE									
Location	Mark	Size	Quan.	Length	Type	A	B	C	Total Length
GATE LIFT PEDESTAL									
	D401	4	4	6'-9"	SPA	2'-3"	1'-6"	3'-0"	27'-0"

GATE LIFT PEDESTAL SIZE D

STEEL SCHEDULE									
Location	Mark	Size	Quan.	Length	Type	A	B	C	Total Length
GATE LIFT PEDESTAL									
	E401	4	4	9'-0"	SPA	2'-5"	3'-1"	3'-6"	36'-0"

GATE LIFT PEDESTAL SIZE E

Note:

Use with Std. Drwg. 7-L-20544 C, D, or E when construction drawings are to be reduced one half size.

FIGURE D-18
GATE LIFT PEDESTAL
STEEL SCHEDULE
EWP Unit Portland, Oregon

STEEL SCHEDULE									
Location	Mark	Size	Quan.	Length	Type	A	B	C	Total Length
GATE LIFT PEDESTAL									
Cutoff	C401	4	3	6'-3"	2	1'-6"	3'-3"	1'-6"	18'-9"
Sidewall	C402	4	1	4'-6"	2	1'-2"	2'-2"	1'-2"	4'-6"
"	C403	4	1	5'-0"	2	1'-5"	2'-2"	1'-5"	5'-0"
"	C404	4	2	4'-0"	2	1'-6"	1'-9"	0'-9"	8'-0"
"	C405	4	2	4'-3"	2	1'-6"	2'-0"	0'-9"	8'-6"
Cutoff	C406	4	4	2'-3"	Str				9'-0"
Sidewall	C407	4	2	3'-0"	Str				6'-0"
"	C408	4	2	2'-9"	Str				5'-6"
"	C409	4	2	0'-6"	Str				1'-0"

GATE LIFT PEDESTAL SIZE C

STEEL SCHEDULE									
Location	Mark	Size	Quan.	Length	Type	A	B	C	Total Length
GATE LIFT PEDESTAL									
	D401	4	4	6'-9"	SPA	2'-3"	1'-6"	3'-0"	27'-0"

GATE LIFT PEDESTAL SIZE D

STEEL SCHEDULE									
Location	Mark	Size	Quan.	Length	Type	A	B	C	Total Length
GATE LIFT PEDESTAL									
	E401	4	4	9'-0"	SPA	2'-5"	3'-1"	3'-6"	36'-0"

GATE LIFT PEDESTAL SIZE E

Note:

Use with Std. Drwg. 7-L-20544 C, D or E when construction drawings are to be reproduced full size.

FIGURE D-19

GATE LIFT PEDESTAL STEEL SCHEDULE

EWP Unit Portland, Oregon

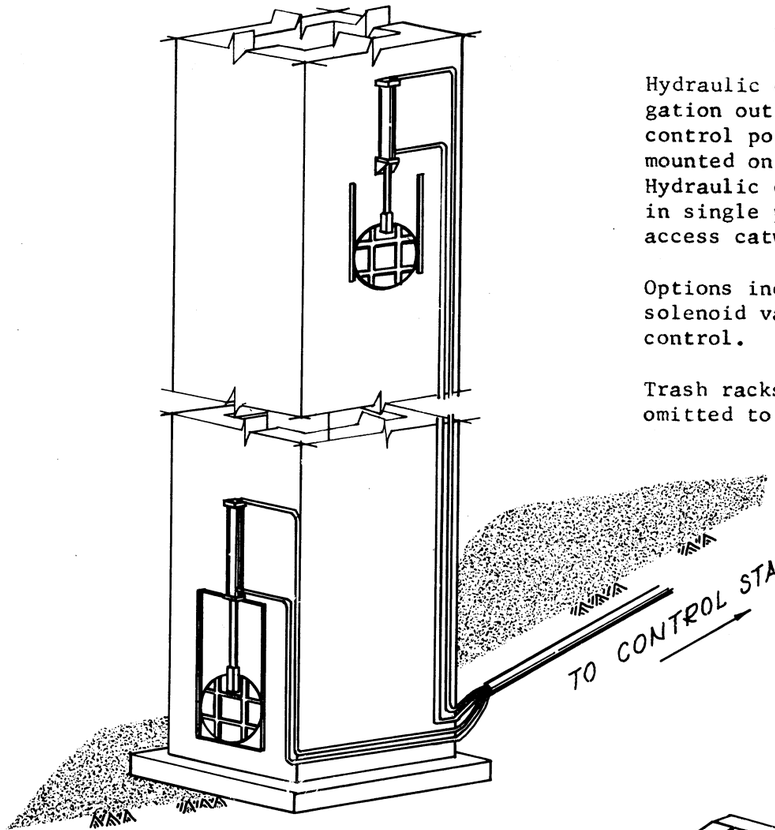

Riser Installation

Hydraulic controls are shown for irrigation outlet and second-stage flood control ports. Cylinders are shown mounted on gate frame or wall bracket. Hydraulic control lines are grouped in single protective conduit. No access catwalk is necessary.

Options include powered pumps and solenoid valves for remote electric control.

Trash racks and cylinder guard are omitted to show cylinder details.

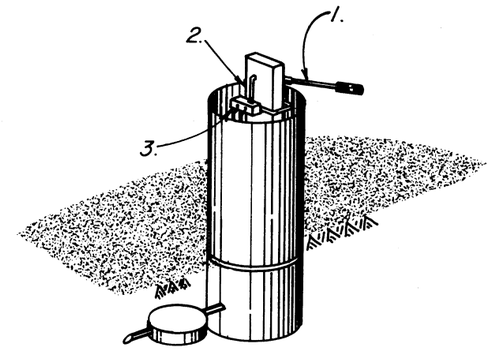

Typical Control Station

Minimum equipment includes:

1. Pump
2. Reservoir
3. 4-way Control Valve

Junction box houses connections.

The controls are shown mounted on a standard pipe section. Protection can be provided by a locking manhole cover and frame. Alternate mounts may vary from a simple post to a walk-in shed.

Controls can be located at the crest of the embankment or at a downstream measuring device.

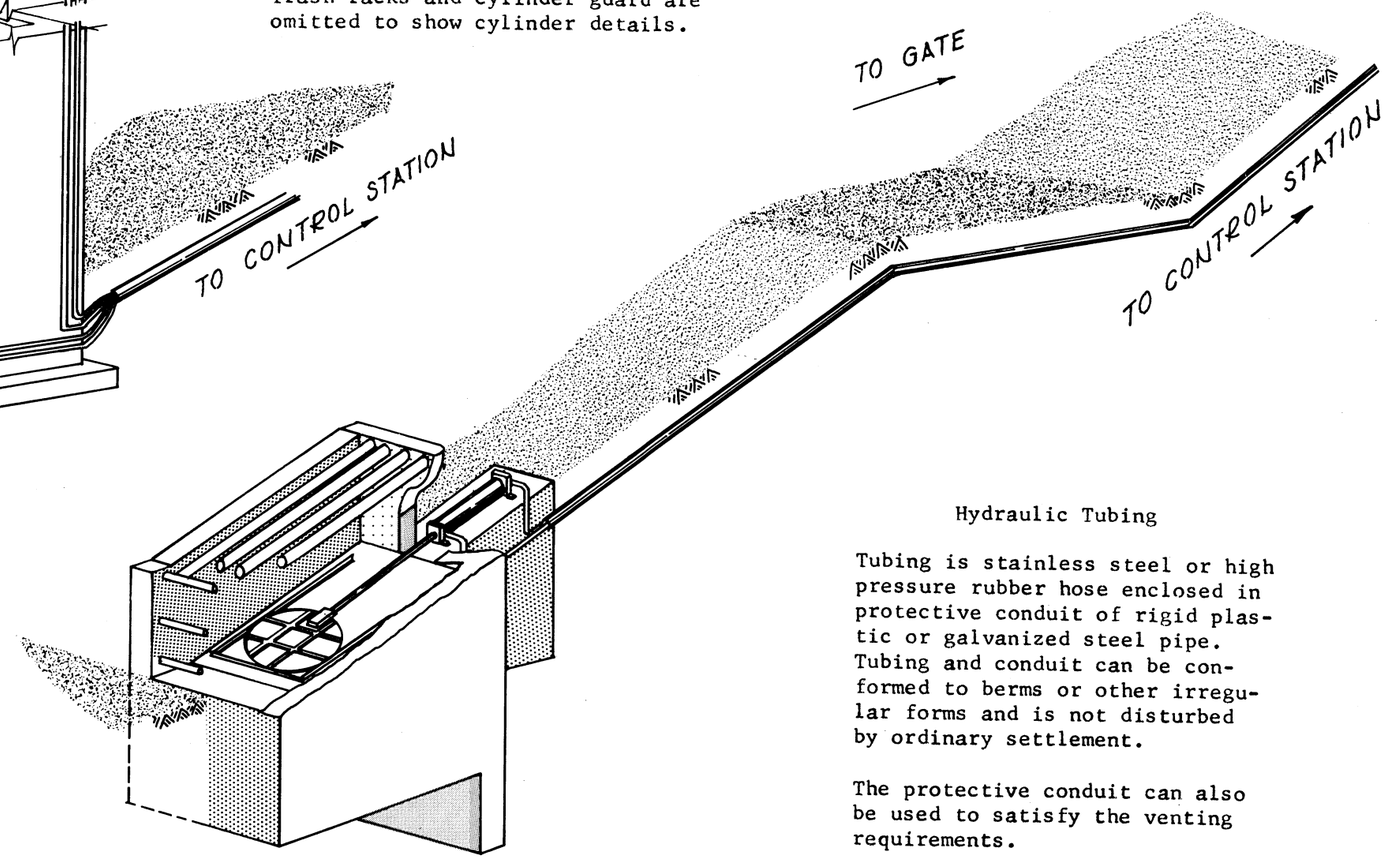

Hydraulic Tubing

Tubing is stainless steel or high pressure rubber hose enclosed in protective conduit of rigid plastic or galvanized steel pipe. Tubing and conduit can be conformed to berms or other irregular forms and is not disturbed by ordinary settlement.

The protective conduit can also be used to satisfy the venting requirements.

Typical Irrigation Inlet

Hydraulic cylinder is a J.I.C. Standard with stainless steel piston rod. Side lug mount is shown bolted directly to concrete surface.

FIGURE D-20

HYDRAULIC CONTROL APPLICATIONS

EWP Unit Portland, Oregon

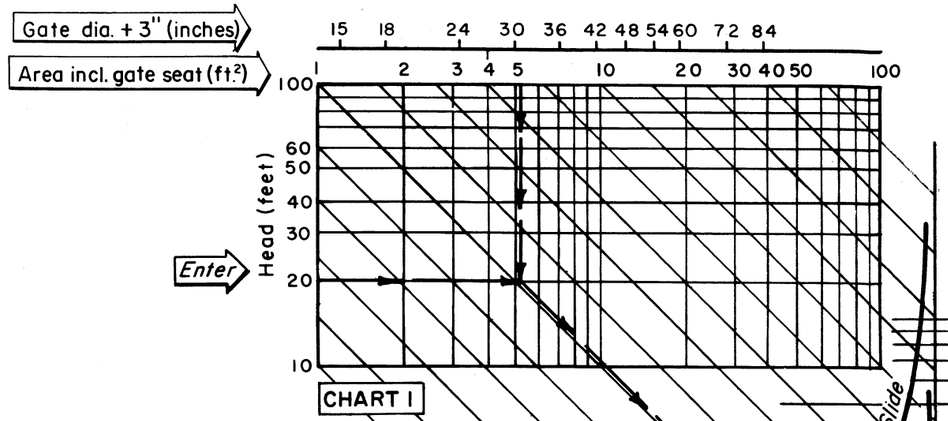

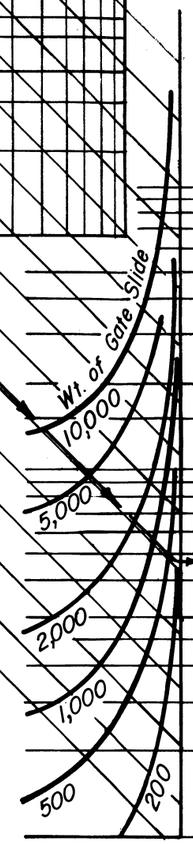

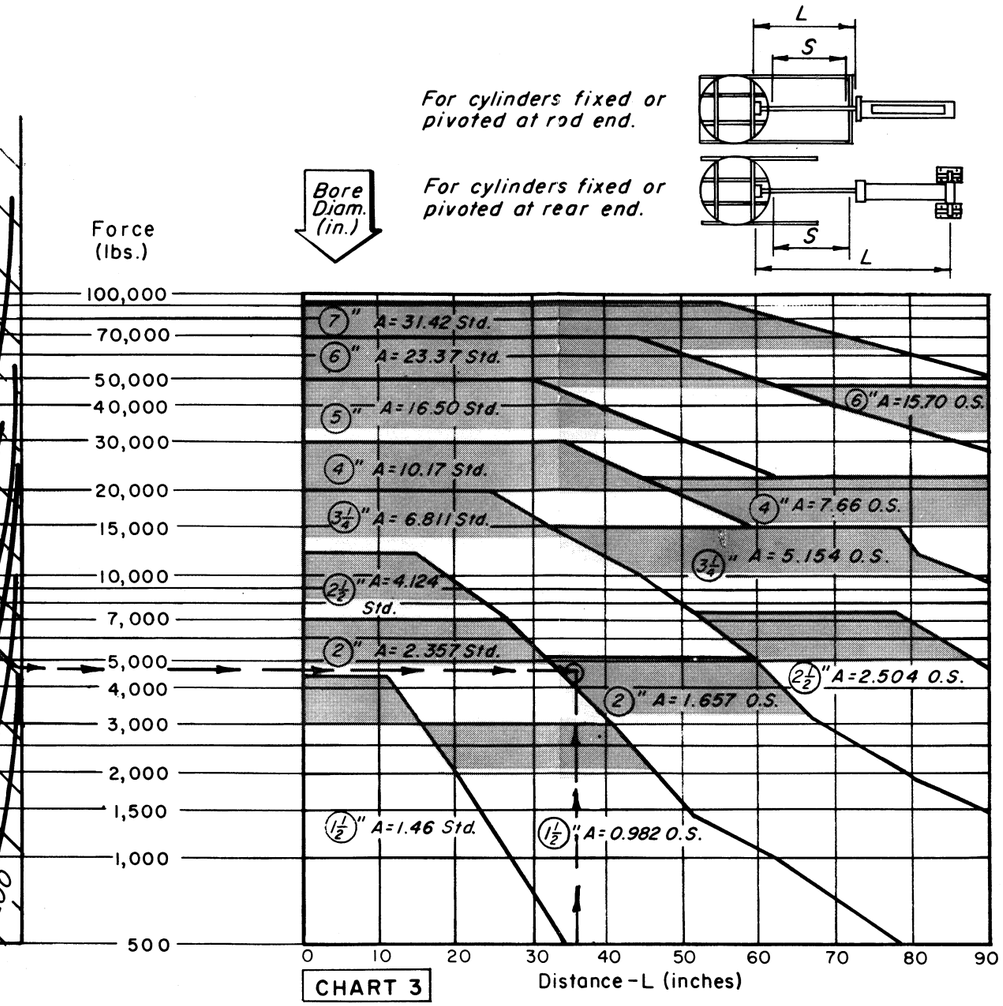

NOTES

1. Cylinders are selected from J.I.C. Interchangeable Series (2000 psi operating, 3000 psi non-shock) for use at maximum pressure applied by hand pump. For use with electric or mechanical power shock must be considered.
2. Friction factor is taken as 0.7.
3. Chart 2 uses full weight of gate slide.
4. Chart 3 - Areas listed are pull stroke (cylinder area minus rod area).
5. Chart 3 - Std. indicates standard rod, O.S. indicates oversize rod.
6. Chart 3 is zoned for several cylinder bore and piston rod sizes. Colored area in each zone has an operating pressure between 2000 - 3000 psi; the rest of the zone less than 2000 psi.

Example Problem

GIVEN:

1. Outlet gate diam. (or area) $(24 + 3)^2$	5.06 sq ft
2. Maximum head of water to ℄ of gate	20 ft
3. Weight of gate slide (Catalog data)	200 lbs
4. Stroke = (24" + 4") =	28 in
5. "L" dimension measured as shown above Chart 3 for front flange mount	36 in

PROCEDURE:

Enter Chart I with gate size plus seat allowance and head. From intersection proceed down 45° guide line to to the Gate Slide Weight, Chart 2, then horizontally to intersection with vertical line from "L" value in Chart 3. Enter Chart 4 with stroke and cylinder selection for reservoir capacity.

FIND:

1. Force (For design of bracket and anchorage)	4700 lbs
2. Cylinder Bore Size	2 in
3. Pressure	<3000 psi
4. Piston Rod	O.S.
5. Reservoir Capacity	45 cu in

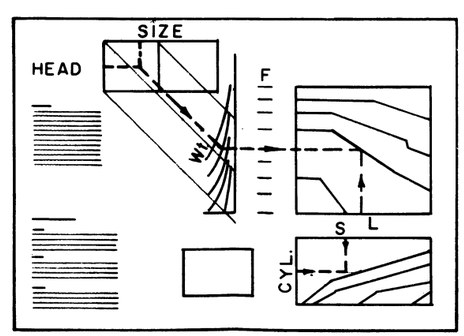

FLOW DIAGRAM

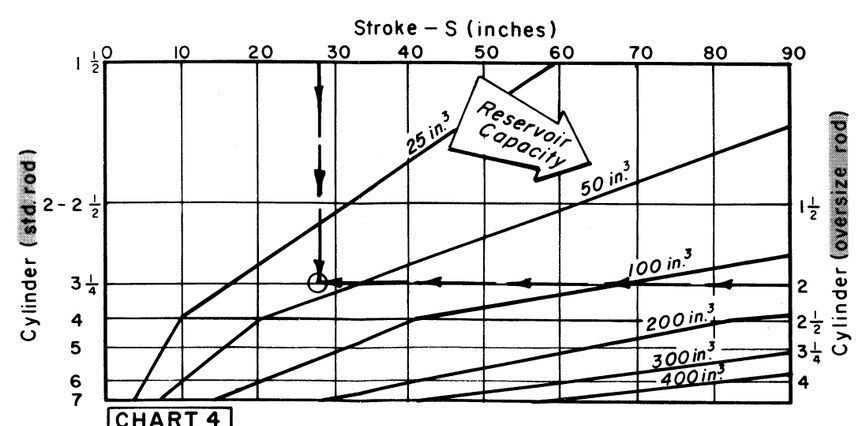

FIGURE D-21

SELECTION CHART FOR HYDRAULIC CYLINDERS

EWP Unit Portland, Oregon

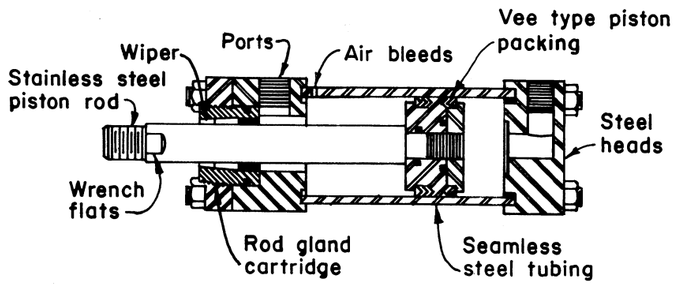

SECTION THROUGH TYPICAL CYLINDER

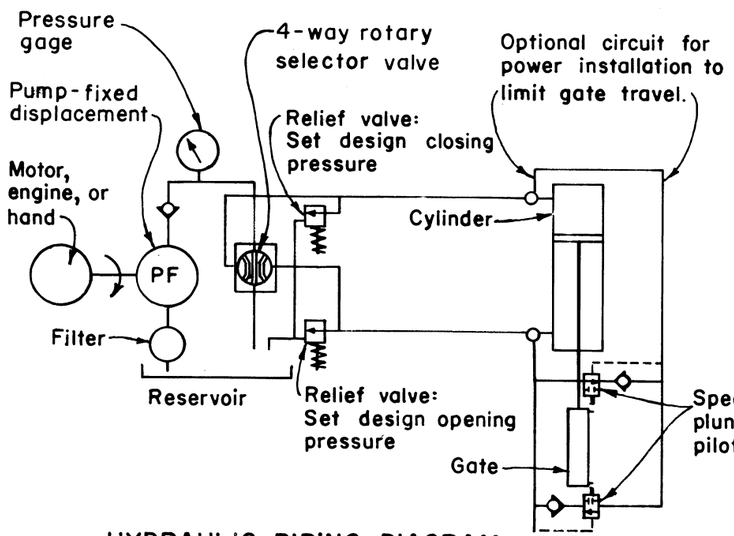

HYDRAULIC PIPING DIAGRAM (PREFERRED)

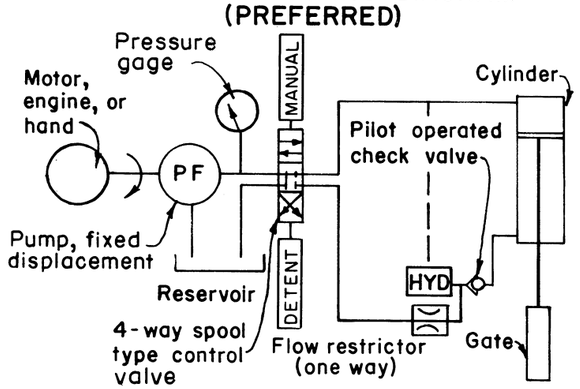

HYDRAULIC PIPING DIAGRAM (ALTERNATE)

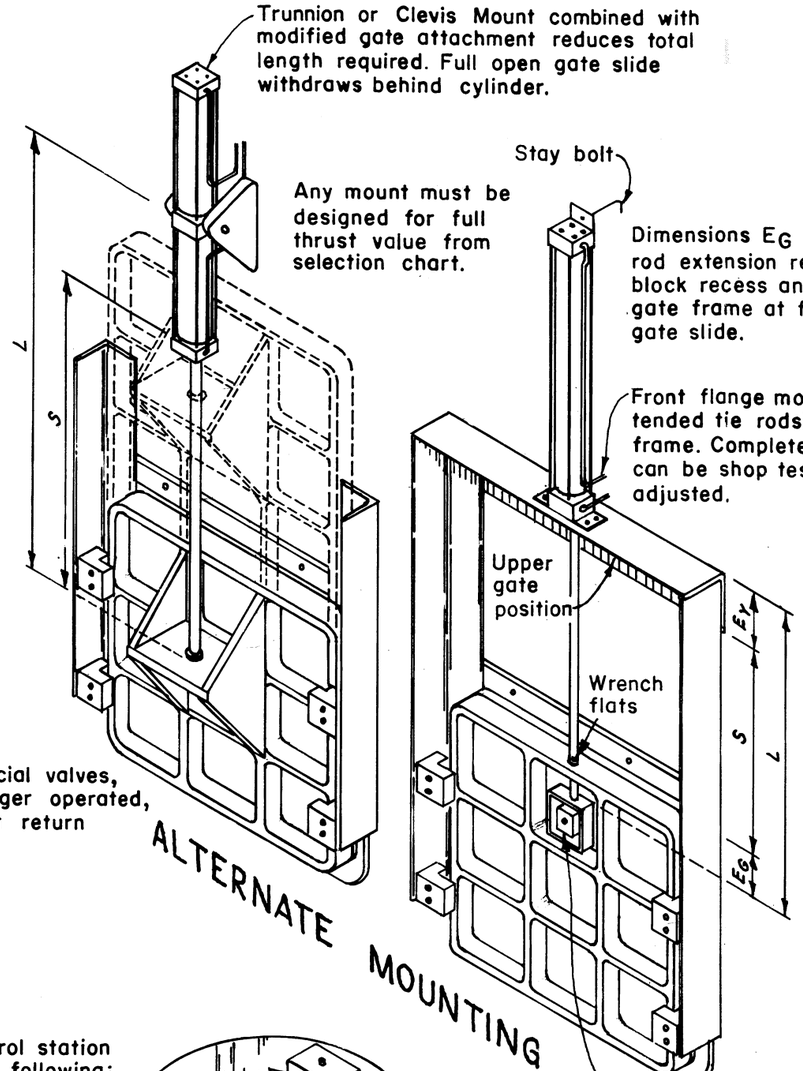

ALTERNATE MOUNTING

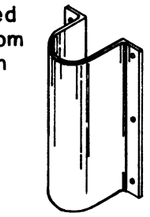

SHIELD

A shield should be provided to protect the cylinder from interference of ice or trash Minimum 14ga. galv. iron.

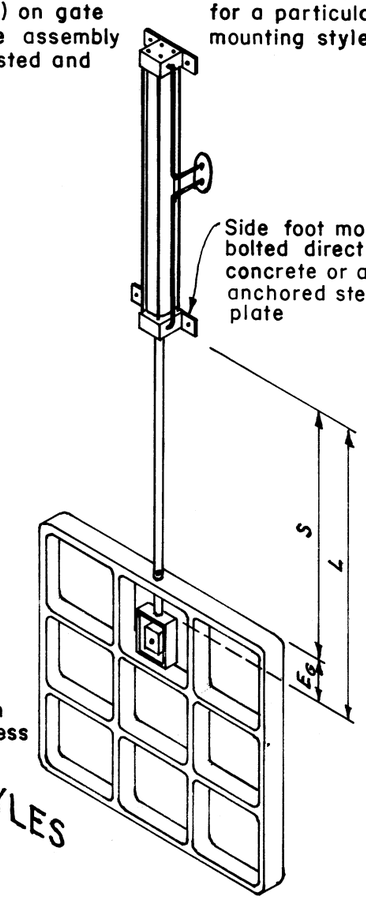

STYLES

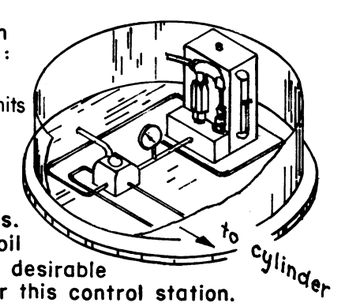

Typical control station includes the following: pump, 4-way valve, reservoir. Assembled units shown at approximate scale in 30" manhole frame. Lid should be secured by lock or pentagonal head bolts. Pressure gauge and oil level sight gauge are desirable optional equipment for this control station.

CONTROL STATION

FIGURE D-22
TYPICAL DETAILS FOR HYDRAULIC CYLINDER GATE CONTROLS

EWP Unit Portland, Oregon

MOUNTING STYLE	CARTER	HANNIFIN	MILLER
Side Foot Mount	CNS (Non-Cushioned) CFS (Cushioned Front End) CRS (Cushioned Rear End) CBS (Cushioned Both Ends)	C-H10	H72
Centerline Mount	KNS (Non-Cushioned) KFS (Cushioned Front End) KRS (Cushioned Rear End) KBS (Cushioned Both Ends)	E-H10	H73
End Foot Mount	LNS (Non-Cushioned) LFS (Cushioned Front End) LRS (Cushioned Rear End) LBS (Cushioned Both Ends)	CB-H10	—
Side Flush Mount	FNS (Non-Cushioned) FFS (Cushioned Front End) FRS (Cushioned Rear End) FBS (Cushioned Both Ends)	F-H10	H74
Rear Flange Mount	ANS (Non-Cushioned) AFS (Cushioned Front End) ARS (Cushioned Rear End) ABS (Cushioned Both Ends)	H-H10	H62
Front Flange Mount	BNS (Non-Cushioned) BFS (Cushioned Front End) BRS (Cushioned Rear End) BBS (Cushioned Both Ends)	J-H10	H61
Square Rear Flange Mount	VNS (Non-Cushioned) VFS (Cushioned Front End) VRS (Cushioned Rear End) VBS (Cushioned Both Ends)	HB-H10	H66
Square Front Flange Mount	WNS (Non-Cushioned) WFS (Cushioned Front End) WRS (Cushioned Rear End) WBS (Cushioned Both Ends)	JB-H10	H65
Clevis Mount	GNS (Non-Cushioned) GFS (Cushioned Front End) GRS (Cushioned Rear End) GBS (Cushioned Both Ends)	BB-H10	H84
Front Trunnion Mount * Intermediate Trunnion Available	ENS (Non-Cushioned) EFS (Cushioned Front End) ERS (Cushioned Rear End) EBS (Cushioned Both Ends)	D-H10	H81
Rear Trunnion Mount * Intermediate Trunnion Available	DNS (Non-Cushioned) DFS (Cushioned Front End) DRS (Cushioned Rear End) DBS (Cushioned Both Ends)	DB-H10	H82
Tie Rods Extended Both Ends	TNS (Non-Cushioned) TFS (Cushioned Front End) TRS (Cushioned Rear End) TBS (Cushioned Both Ends)	TD-H10	H51
Tie Rods Extended Rear End Only	YNS (Non-Cushioned) YFS (Cushioned Front End) YRS (Cushioned Rear End) YBS (Cushioned Both Ends)	TC-H10	H52
Tie Rods Extended Front End Only	ZNS (Non-Cushioned) ZFS (Cushioned Front End) ZRS (Cushioned Rear End) ZBS (Cushioned Both Ends)	TB-H10	H53
Basic Mount	SNS (Non-Cushioned) SFS (Cushioned Front End) SRS (Cushioned Rear End) SBS (Cushioned Both Ends)	T-H10	H50
Double-End Construction Available in Any Mount	—DER Suffix	K Prefix	D Prefix

INTERCHANGEABLE STANDARD ROD ENDS			
Male (Standard)	Style #1	Style 10 & 20	
Male (Alternate)	Style #2	Style 11	Style #2
Male (Optional)	Style #3	—	—
Female	Style #4	Style 12	Style 3

REFERENCE: CARTER CONTROL, INC.

FIGURE D-23

HYDRAULIC CYLINDER INTERCHANGE CHART

EWP Unit Portland, Oregon

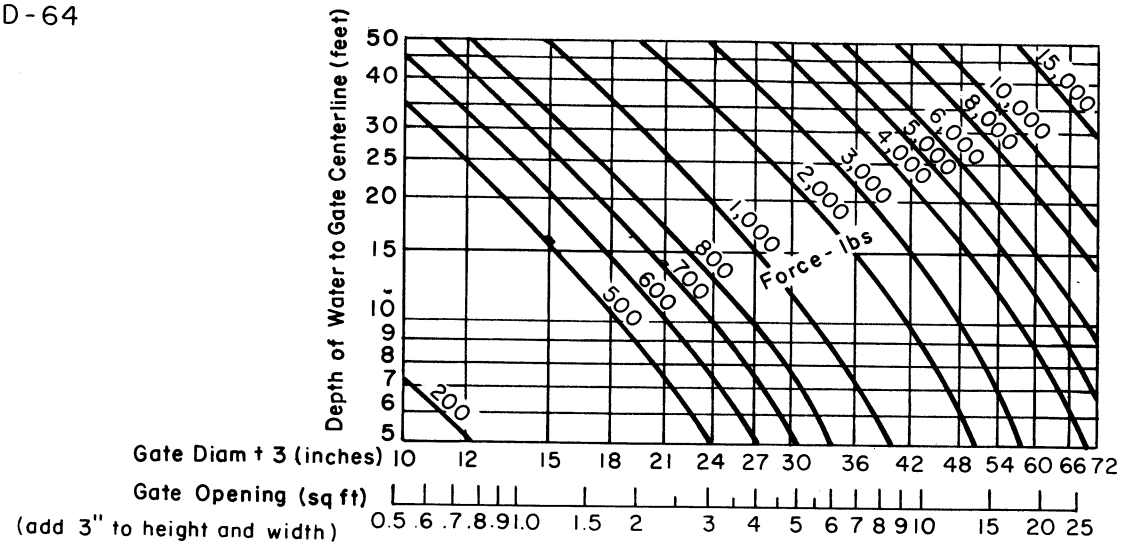

FORCE IN MECHANICAL LIFT

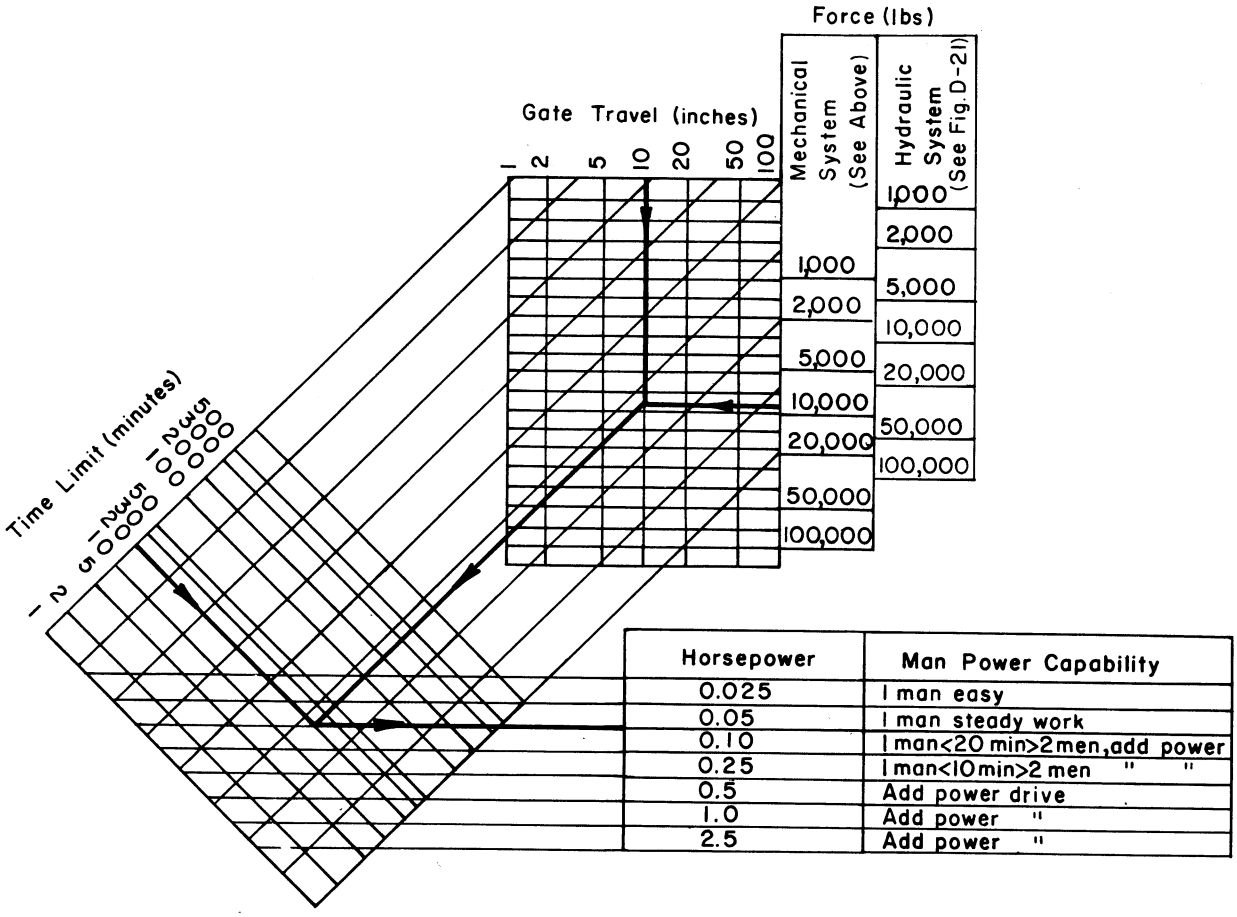

Horsepower	Man Power Capability
0.025	1 man easy
0.05	1 man steady work
0.10	1 man<20 min>2 men, add power
0.25	1 man<10 min>2 men " "
0.5	Add power drive
1.0	Add power "
2.5	Add power "

EVALUATION OF POWER REQUIREMENT

FIGURE D-24
CONTROL OPERATION MANUAL vs POWER
EWP Unit Portland, Oregon

SECTION E - CONDUIT

Contents

		Page
I.	INTRODUCTION	E-1
II.	GENERAL CRITERIA	E-1
III.	CONDUIT TYPES	E-2
	A. Precast Concrete Pipe	E-2
	B. Flexible Conduits	E-2
	C. Monolithic Conduits	E-3
IV.	JOINTS	E-4
V.	ANTI-SEEP COLLARS	E-5
VI.	CAMBER IN CONDUITS	E-5
VII.	EXAMPLE	E-8

Figures

E-1	Types of Precast Concrete Pipe	E-13
E-2	Monolithic R/C Conduit with Steel Liner	E-15
E-3	R/C Monolithic Conduit Detail	E-16
E-4	R/C Monolithic Conduit Detail	E-17
E-5	Monolithic Outlet Conduit Joint Details	E-18
E-6	Outlet Conduit Composite Construction	E-19
E-7	Outlet Conduit Details (ES-154)	E-21
E-8	Conduit Anti-Seep Collar Selection Chart	E-23
E-9	Corrugated Metal Diaphragm Anti-Seep Collar	E-25
E-10	Settlement Curve and Simple Camber	E-27
E-11	Conduit Camber on Parabolic Curve	E-28

Tables

		Page
E-1	Wall Thickness - Standard R/C and Cylinder Pipe	E-29
E-2	Camber Data	E-30
E-3	Recommended Corrugated Steel Pipe Gages	E-31
E-4	Recommended Corrugated or Spiral Aluminum Pipe Gages . .	E-31

SECTION E - CONDUIT

I. INTRODUCTION

One of the more critical elements in the safety of a dam is the conduit that carries water through the embankment. Not only must the conduit be watertight against internal water pressures, it must be designed to carry exterior vertical and transverse loads to resist structural failure. It must be set on a grade that takes into account the magnitude of foundation settlement and the variation of this settlement along its length. It must allow for readjustment of the individual pipe lengths without failure of the joints. These joints must allow for "stretch" in the conduit as a result of foundation displacement. And lastly, the backfill must be carefully placed along the conduit so that seepage water will not find a more favorable path along the contact surface than that it must face through the embankment itself.

These conditions are met in part by the selection of the proper conduit type and strength, whether it be a rigid pipe in a concrete cradle, a flexible pipe, or a monolithic box, set on a grade considering camber requirements. Adding anti-seep collars insures the path along the contact zone will be a longer seepage line than that through the embankment. Of course all of these precautions mean little if the installation does not conform to the requirements of the construction specifications.

II. GENERAL CRITERIA

Because the conduit is such a vital part in the safety of the dam, criteria is very explicit and limiting in those cases where loss of life could result from embankment failure. To ensure that these limiting criteria are not overlooked, the following tabulation of existing engineering memoranda is included and these must be complied with as each restriction applies:

1. Engineering Memorandum SCS-27 (Rev.) Earth Dams.

2. Engineering Memorandum SCS-42 (Rev.) R/C Pipe Drop Inlet Barrels.

3. Engineering Memorandum SCS-58, Corrugated Aluminum Pipe and Fittings.

In addition to the memoranda, procedures for analysis are continued in the following:

1. NEH, Section 6, Structural Design

2. Technical Release No. 5, The Structural Design of Underground Conduits

3. Technical Release No. 18, Joint Gap Computations for R/C Pipe Drop Inlet Barrels

Appropriate specifications include:

Spec. No. 41, R/C Pressure Pipe
Spec. No. 51, Corrugated Metal Pipe Conduits
Spec. No. 52, Steel Pipe Conduits
Spec. No. 541, R/C Pressure Pipe
Spec. No. 542, Concrete Culvert Pipe
Spec. No. 551, Zinc-Coated Iron or Steel Corrugated Pipe
Spec. No. 552, Aluminum Corrugated Pipe
Spec. No. 553, Steel Pipe and Fittings

III. CONDUIT TYPES

A. Precast Concrete Pipe

Four types of precast pipe are recommended as suitable for use as a conduit through an embankment.

1. ASTM 361, R/C Low Head Pressure Pipe
2. AWWA 300, R/C Steel Cylinder Type Non-Prestressed
3. AWWA 301, R/C Steel Cylinder Type Prestressed
4. AWWA 302, R/C Non-Cylinder Type Non-Prestressed

The procedures presented in Technical Release No. 5 should be used in determining structural requirements of the pipe.

General details of precast pipe are shown on Figure E-1. The inside diameter listed on this figure for the different types in all inclusive. Incremental sizes and some types are not available from all plants. Freight costs can add considerably to construction costs for a particular job and should be a consideration in comparing alternate details.

In addition to the precast pipe listed above, a concrete cylinder pipe complying with Federal Specification SS-P-381 has been used in composite construction as a liner in a job-placed reinforced concrete conduit.

Conduit wall thicknesses have been listed in Table E-1 for ready reference as required.

B. Flexible Conduits

Of the flexible conduits, a corrugated metal is the most commonly used. Corrugations may be annular or spiral and the conduit made of galvanized iron or aluminum.

Use of corrugated pipe is limited to fill heights of 25'-0" or less.

Aluminum pipe shall not exceed 36" diameter and internal pressures shall be limited to 15 feet of head. Aluminum material shall not be used where the pH is less than 4 or greater than 9.

Where the product of the storage in acre feet times the height of the dam[1/] is less than 3000 and meets the conditions above, the following tables apply:

Recommended corrugated metal pipe gages for various pipe diameters and fill heights are given in

1. Table E-3 for corrugated steel.

2. Table E-4 for corrugated aluminum.

Special precautions should be taken in the backfill operation. Because of its light weight, the pipe will be displaced upward when backfilling in the lower third. To avoid this displacement there is a tendency by the construction crew to under-compact this material. This results in a poor contact zone between the soil and conduit with a potential for piping and eventual embankment failure. To insure adequate compaction, the conduit should be preloaded with sandbags to resist the uplift until the lower 120° of the conduit is backfilled. As an alternate the pipe can be bedded in concrete.

Welded steel pipe may be used as a liner for a monolithic conduit of small diameter. As such it no longer is classed as a flexible pipe.

C. Monolithic Conduits

Poured in place conduits are used in many installations for both the small diameter as well as the larger box conduit. In the small diameter conduit a welded steel pipe is used as a liner which serves as an interior form. The joints of this pipe are "stab" type with a rubber ring. A trench is excavated to neat lines and serves as the bottom and side exterior forms for the conduit walls.

On a non-compressible foundation no joints are provided in the concrete. For a compressible foundation a joint similar to the detail shown on Figure E-3 or E-5 is used.

1/ Defined as the difference in elevation in feet between the emergency spillway crest and the lowest point in the original profile on the centerline of the dam.

Conduit wall thickness varies with the soil type in the foundation and embankment as well as the height of fill over the conduit. Figure E-2 was developed to size the conduit wall thickness and reinforcement for trial sections. Successive choices between two types of conduit embedment conditions, three types of foundations, and finally three types of embankment soils narrows down the problem to the trial section. An extension of the final zone to an intersection with the height of earth cover will indicate the governing structural condition. From this point a vertical projection to the W line upward in the shear zone, downward in the moment zone, and then a horizontal projection to conduit diameter will provide thickness and transverse reinforcement requirements. Longitudinal reinforcement is arbitrary but should consist of at least eight #5 bars for conduit diameters over 12 inches. Lateral spacing of longitudinal bars should not exceed 12 inches.

IV. JOINTS

The integrity of the entire installation depends to a great extent on joint detail. For concrete conduits any rotation due to settlement and elongation of the conduit must take place at the joints. Procedure for calculating joint extensibility is given in Technical Release No. 18.

Recommended joint detail for rigid circular conduits consists of an "O" ring rubber gasket seated in a groove in a steel spigot ring to be inserted in a steel bell. A sectional detail of this joint assembly is shown on Figure E-1. The rest of the joint details shown on this figure are not acceptable in conduits through embankments.

Spigot ring cross section will vary with manufacturer conduit diameter and joint extension requirement. In western areas Carnegie shape M 3818 and M 3516 are commonly used. The annular space between the adjacent pipe ends should be filled with a mastic joint sealer for joint flexibility instead of the cement grout normally recommended by the manufacturer.

The bell and spigot joint is used for both the precast pipe as well as the composite construction (shown in Figure E-6).

For monolithic concrete conduits with a rectangular opening the joint detail will vary with conduit size. Several details are shown on Figures E-3 and E-5.

The Carnegie shape joint mentioned above is recommended for welded steel pipe. An alternate joint would be a Dresser coupling. Least desirable is a welded joint.

For corrugated metal conduits the watertight coupling band is used.

V. ANTI-SEEP COLLARS

To insure that any seepage along the contact surface between the conduit and embankment will be less than that through the soil itself, anti-seep collars are used. These are projections from the conduit that effectively increase the length of the seepage path.

Anti-seep collars must be structurally independent of the conduit. To insure this, roofing felt and preformed joint filler is used in the contact surfaces between the conduit and collar.

If the collars are placed too close together, the seepage path would tend to bridge the space between the collars since this is the path of least resistance. Although keeping the seepage from the conduit-soil contact surface, close spacing would require an excessive number of collars. Anti-seep collar spacing should be restricted to a minimum of 10'-0 and a maximum of 25'-0.

The length of the projection and the number of anti-seep collars varies with agency requirements. Normally a 2'-0 vertical projection is recommended and a number of collars equivalent to a 15% increase in conduit length. Various soil types and zoned embankments add to the design problem. To simplify the proportioning of anti-seep collars, Figure E-8 was developed. On it, embankment types and soil types are considered in selecting either a 15% (1.15) or a 20% (1.20) increase in seepage length. In zoned fills the vertical projection should be increased so that close spacing can be avoided and still retain the collars in the impervious zone where they will do the most good.

VI. CAMBER IN CONDUITS

Foundation settlement can be expected under the combined weight of an embankment and the water impounded in the reservoir. The magnitude of settlement is a function of the applied load; depth, relative density, moisture content and permeability of compressible foundation materials; and time. Generally clays, silty clays and medium and high plastic silts are the most compressible materials. Settlement characteristics of these materials must be determined by consolidation tests on undisturbed samples. The magnitude of settlement is computed using procedures of Standard Drawing 7-N-15474 (not included here) and is part of embankment design.

Camber is designed for a conduit so that as settlement occurs, the invert of a cambered conduit theoretically approaches uniform slope. Camber for a conduit can be defined as a curve which approximates the inverse of the settlement curve. If a conduit is not cambered a sag will develop as settlement occurs, the conduit joints will spread at the bottom, the conduit can leak and cause serious damage to the structure.

Camber is designed for a conduit in addition to computing the joint extensibility requirements in accordance with Technical Release 18. Settlement does not occur as a gradual advancement of a smooth curve. Although the final settlement curve is approximately a uniform curve, enough irregularity will exist in the conduit profile to require adequate joint extensibility.

The simplest method of computing camber is to use two lengths of uniform slope as shown in Figure E-10. This method is used only for short conduits with small settlement. The joint at the grade change is the only one designed not to spread as settlement occurs.

A preferred method is to design a curve approximating the inverse of the settlement curve. Theoretically, all joints on such a curve are designed not to spread as settlement occurs. A procedure for this method is given below.

Because of the many variables affecting the magnitude of settlement, it is unwise to innocently assume that all foundations can be treated alike. However, for small dams less than 30 feet high on shallow foundations, the magnitude of settlement is small, precise computations for camber are seldom justified and the following general assumptions can be made.

1. Shallow foundation is defined as depth to noncompressible material less than one-half the height of dam.

2. Depth of compressible foundation is uniform under the dam.

3. Settlement curve is a parabolic curve with maximum settlement near the centerline of the dam.

4. Maximum settlement can be estimated to be 4 percent to 5 percent of foundation depth when not otherwise computed.

In the following procedure certain items are fixed by site conditions and the embankment design. These include:

1. L - Total length of conduit.

2. Y - Total drop between inlet and outlet of conduit.

3. Δ - Magnitude of settlement, assumed to be largest at embankment centerline.

4. δ - Camber height at point X.

5. ℓ - Length of standard pipe or conduit sections to be used. (ℓ is a partial length.)

A joint should be placed as near as possible to the centerline of the dam. Negative slope in the cambered conduit should be avoided. Use zero slope through those reaches where camber design indicates negative slope is necessary.

Figure E-11 is a dimensionless plot of settlement vs. conduit length for a parabolic settlement curve.

Table E-2 contains data for computing maximum deflection angle at a joint for various lengths of standard reinforced concrete pipe.

Procedure for Tabular Computations

1. Determine number of pipe lengths required (n = lowest whole number).

$$n = \frac{L}{\ell}$$

2. Determine $\mathfrak{r} = L - n\ell$

3. Determine $L_1 \simeq \frac{1}{2} W + Z$(El. top of Dam - El. Inlet).

   This should be a multiple of ℓ so that a pipe joint falls near centerline of dam.

4. Determine $L_2 = L - L_1$

5. Determine average uniform slope and tabulate elevation of average grade line at each pipe joint (Col. 7).

6. Compute camber: Refer to page E-9 and 10 for tabulation form.

   a. Tabulate ℓ_1 and ℓ_2 (Col. 2).

   b. Tabulate $\Sigma\ell_1$ and $\Sigma\ell_2$ (Col. 3)

   c. Tabulate $\frac{\Sigma\ell_1}{L_1}$ and $\frac{\Sigma\ell_1}{L_2}$ (Col. 4)

   d. From Figure E-11 read $\frac{\delta}{\Delta}$ (Col. 5)

   e. Compute camber = $\delta = \frac{\delta}{\Delta}\Delta$ (Col. 6)

   f. Tabulate average grade elevation - elevation of invert at upstream end less drop per length of pipe (Col. 7).

   g. Compute camber grade elevation = average grade elevation plus camber (Col. 6 + Col. 7) = (Col. 8).

VII. EXAMPLE

Given: The earth dam data used in the example problem of Section B, and choices of 20 in. steel pipe, 21 in. R/C pipe, or 24 in. CMP.

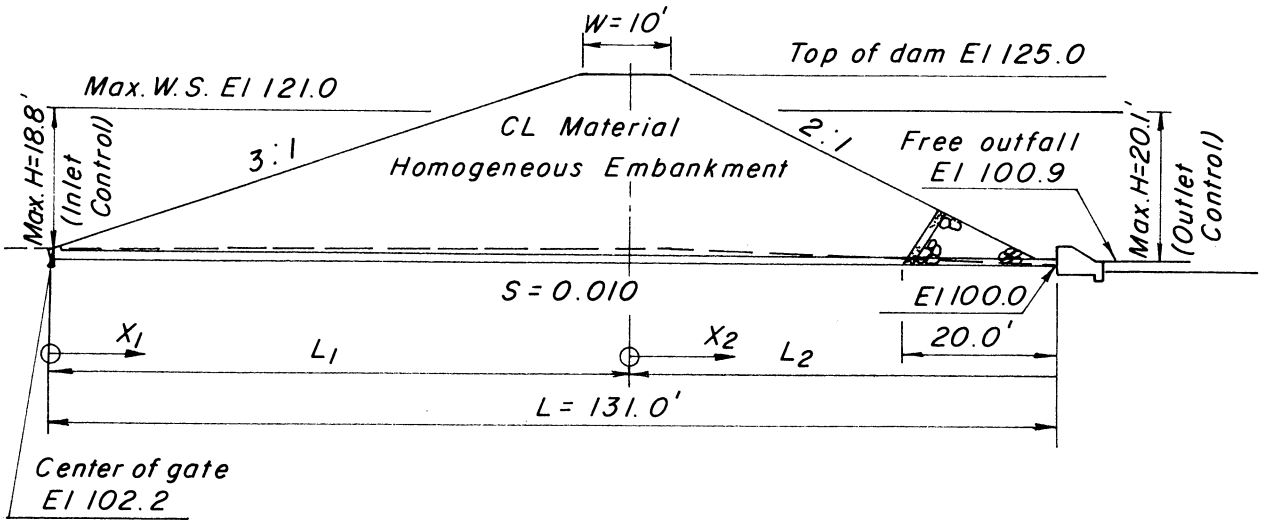

$L_1 + L_2 = 131$

$\Delta = 0.4$ ft (determined by soils engineer)

$\ell = 16$ ft (use standard pipe)

$Y = 1.31$ ft

Determine: 1. Camber for the outlet conduit by computing joint elevations.

2. The number and spacing of collars, comparison of conduit types and quantities for 20 in. steel pipe, 21 in. R/C pipe and 24 in. CMP.

Problem Analysis:

1. Find camber:

a. Determine conduit length.
b. Determine the number of full pipe lengths.
c. Determine L_1 and L_2.
d. Determine the average uniform slope.
e. Determine drop per pipe length.
f. Tabulate ℓ_1 and ℓ_2.

g. Tabulate $\Sigma\ell_1$ and $\Sigma\ell_2$ (note 2 horizontal scales on Figure E-6)

h. Tabulate $\frac{\Sigma\ell_1}{L_1}$ $\frac{\Sigma\ell_2}{L_2}$

i. Determine $\frac{\delta}{\Delta}$ from Figure E-11.

j. Determine δ

k. Determine average grade elevation.

l. Determine camber grade elevation.

2. Details:

a. Determine the number of collars, Figure E-8.

b. Determine encasement and collars for 20 in. steel pipe.

c. Find combination of 21 in. R/C pipe, cradle and collar meeting strength requirement.

d. Check minimum gage and diaphragm size for 24 in. CMP.

Solution:

1. $L_1 = \frac{1}{2}W + 3(1250 - 101.31) = 5 + 71.1 = 76.1$

Use L_1 = 80 ft = 5 pipe lengths

Number of full pipe lengths $= \frac{131}{16} = 8$

L_2 = 131 - 80 = 51' = 3 - 16' lengths = 1 - 3' length

Drop per length of pipe: $D_1 = 16(0.010) = 0.16$

$D_2 = 3(0.01) = 0.03$

1	2	3	4	5	6	7	8
Joint No.	ℓ_1	X_1 or $\Sigma\ell_1$	$\frac{\Sigma\ell_1}{L_1}$	$\frac{\delta}{\Delta}$	δ	Average Grade Elevation	Camber Grade Elevation
1	0	0	0	0	0	101.31	101.31
2	16	16	0.20	0.37	0.15	101.15	101.30
3	16	32	0.40	0.63	0.25	100.99	101.24
4	16	48	0.60	0.84	0.34	100.83	101.17
5	16	64	0.80	0.96	0.38	100.67	101.05
6	16	80	1.00	1.00	0.40	100.51	100.91

1	2	3	4	5	6	7	8
Joint No.	ℓ_2	X_2 or $\Sigma\ell_2$	$\frac{\Sigma\ell_2}{L_2}$	$\frac{\delta}{\Delta}$	δ	Average Grade Elevation	Camber Grade Elevation
7	16	16	0.31	0.90	0.36	100.35	100.71
8	16	32	0.63	0.61	0.24	100.19	100.43
9	16	48	0.94	0.12	0.05	100.03	100.08
10	3	51	1.00	0	0	100.00	100.00

2. Details

a. Determine the number of cutoffs and spacing:

The dam is a homogeneous embankment type (1) with CL material. Referring to Figure E-8 shows that the 1.15 chart is recommended. Enter the 1.15 chart with L' = 111 ft and read V = 2.5 ft for n = 4, V = 2.0 ft for n = 5, and V = 1.5 ft for n = 6. Since V = 2.0 ft is recommended as a national standard, use n = 5. The spacing is then determined by $S = \frac{L'}{n + 1}$ or $S = \frac{111}{6}$ = 18.5 ft, use S = 18.5 ft.

b. Check 20" R/C monolithic conduit.

Using a projecting conduit condition with a foundation of high liquid limit clay, an embankment material will be assumed to be of low plasticity.

With a height of earth cover of 25 ft and a pipe diameter of 20 in., enter Figure E-2 as shown by example. Find t = 6 in. (minimum thickness) and steel = #5 @ 12 in.

Quantities from Table J-E1 show this conduit to require (131)(0.19) = 24.9 cu yd of concrete and (131)(11.04) = 1446 lb of steel.

Using D + 2t = 2'-8" and V = 2.0 ft from Table J-E2, find the anti-seep collars require (5)(0.847) = 4.2 cu yd of concrete and (5)(47.2) = 236 lb of steel.

c. Check 21" R/C conduit.

Table J-E4 lists 21" R/C pipe as being available meeting the AWWA C-302 (f_c = 6000 psi), ASTM C-361.

Using the procedures as presented in Technical Release 5 find the combination of pipe and cradle that satisfies the strength requirements.

d. Check for 24" CMP.

If corrugated metal pipe is acceptable, minimum pipe gages are listed in Tables E-3 and E-4.

For a fill height of 25 ft, find required pipe gage of 16 for corrugated steel and 12 gage for aluminum.

For either steel or aluminum, the standard manufactured anti-seep collar is 72" x 72" of 14 gage material. Details for both collar and coupling band are shown on Figure E-9.

CONCRETE CYLINDER

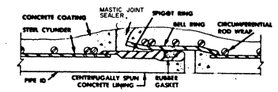

Federal Specification SS-P-381
Diameters 12 thru 36 inch;
Pressures to 250 psi
Prestressed

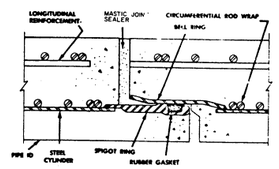

AWWA Standard C300
Not prestressed
Diameters 20 thru 96 inch
Pressures 40 thru 260 psi

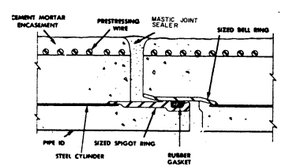

AWWA Standard C301
Prestressed
Diameters 12 thru 96 inch
Pressure as specified

REINFORCED CONCRETE

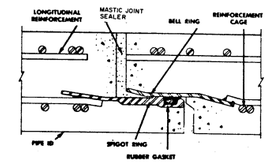

ASTM Designation C361
Diameters 12 thru 168 inch
Pressures to 125 feet of head

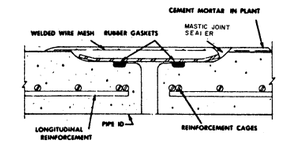

AWWA Standard C302

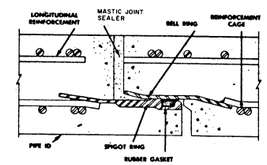

AWWA Standard C302
Diameters 12 thru 96 inch
Pressures less than 45 psi

ALTERNATE JOINT DETAIL

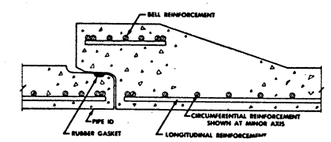

AWWA Standard C302

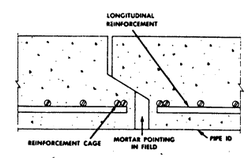

ASTM Designation: C 76
Diameters 12 thru 108 inches

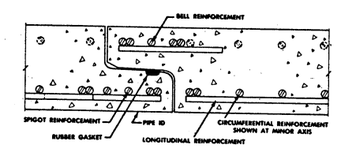

AWWA Standard C302

JOINT DETAIL

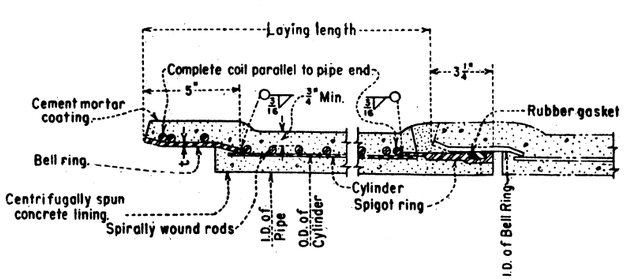

SECTIONAL DETAIL

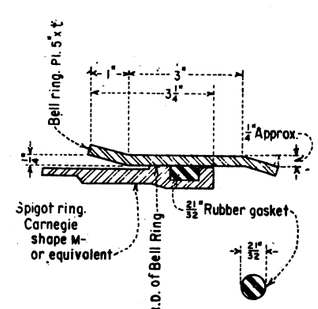

RING ASSEMBLY

Note:

Alternate Joint Details shown are typical of the variation in joint types that are available for most classes of pipe. They are not all acceptable on conduits thru dam embankments.

The ring assembly detail shows a steel ring joint for minimum joint extensibility.

FIGURE E-1
TYPES OF PRECAST CONCRETE PIPE
EWP Unit Portland, Oregon

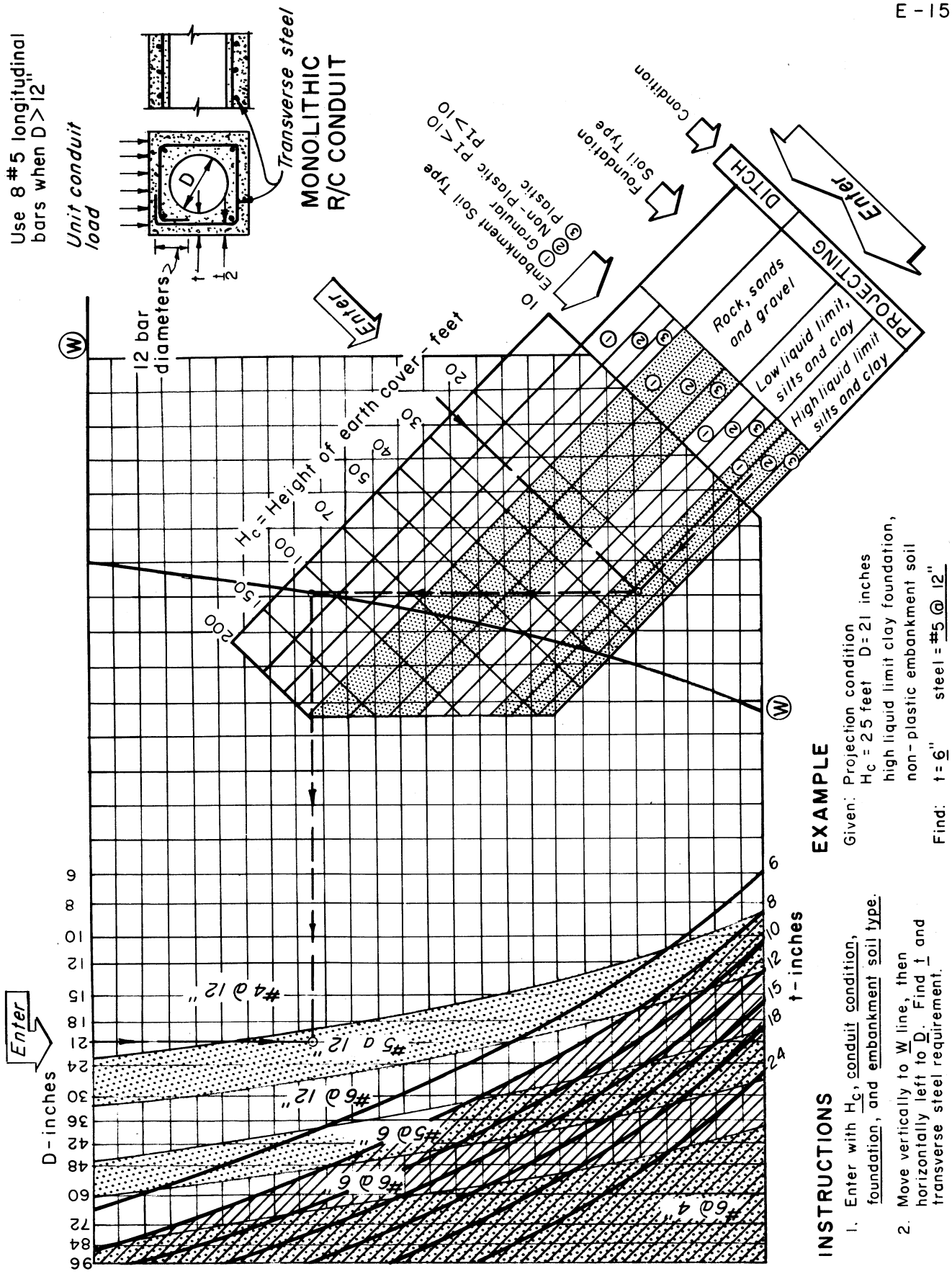

FIGURE E-2

MONOLITHIC R/C CONDUIT WITH STEEL LINER

EWP Unit Portland, Oregon

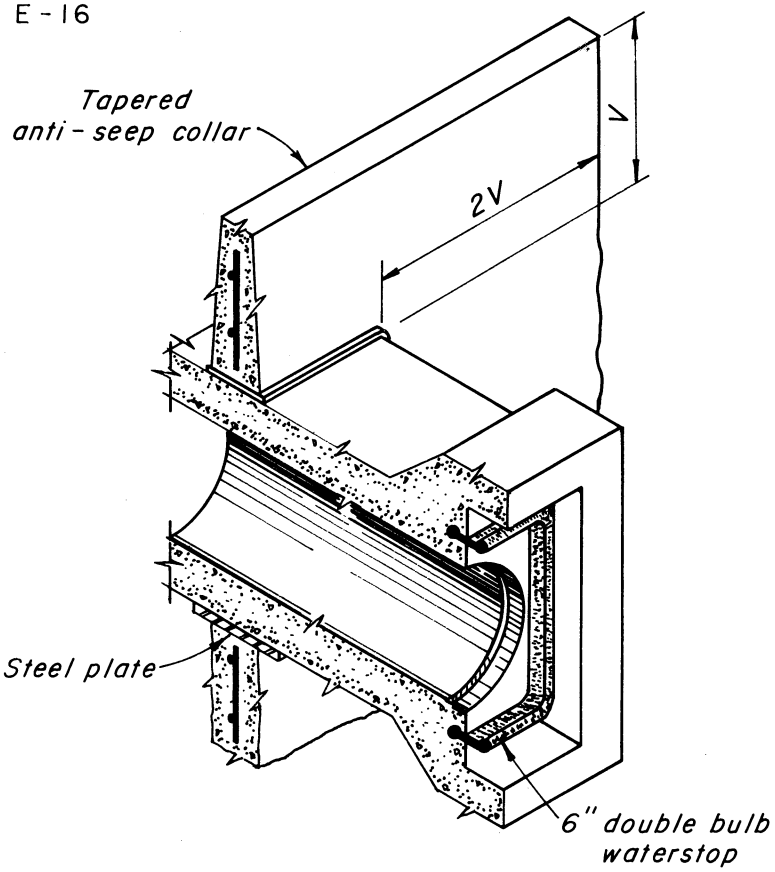

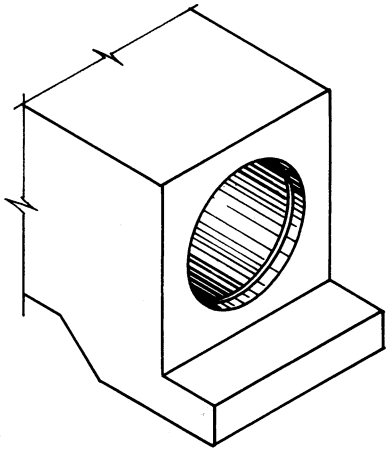

ALTERNATE

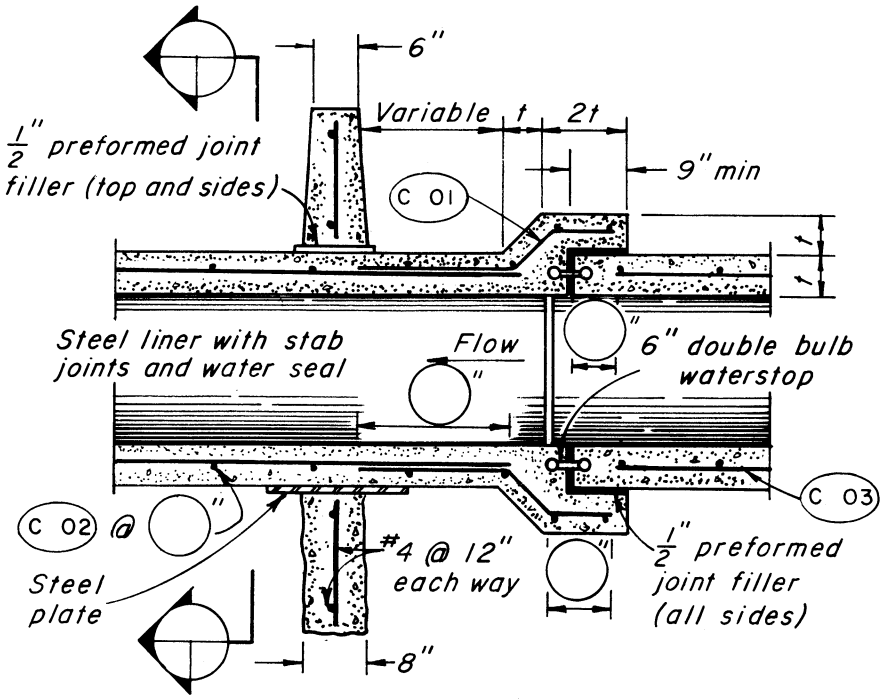

SECTIONAL ELEVATION

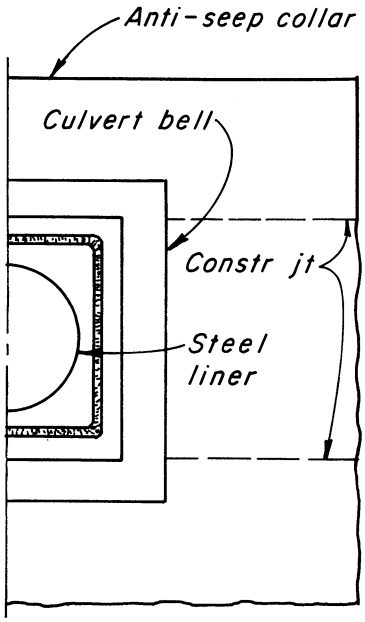

END VIEW

ANTI-SEEP COLLAR

Note:

Max. joint spacing = 32.0'

Refer to Figure E-2 for thickness t and reinforcing requirements

FIGURE E-3

R/C MONOLITHIC CONDUIT DETAIL

EWP Unit Portland, Oregon

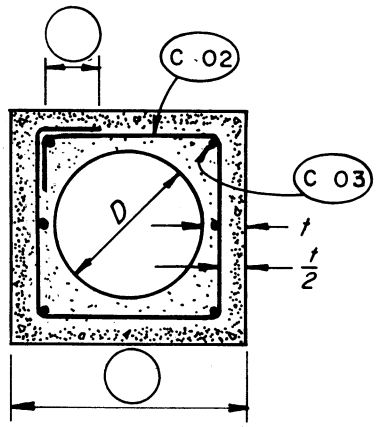

Note:
Use 8 longitudinal bars when D > 12"

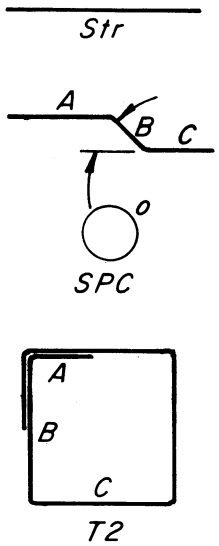

SECTION

BAR TYPES

Not to Scale

STEEL SCHEDULE									
Location	Mark	Size	Quan.	Length	Type	A	B	C	Total Length
CONDUIT ENCASEMENT									
	C 01				SPC				
	C 02				2				
	C 03				Str				

Use when construction drawings are to be reduced one half size

STEEL SCHEDULE									
Location	Mark	Size	Quan.	Length	Type	A	B	C	Total Length
CONDUIT ENCASEMENT									
	C 01				SPC				
	C 02				T2				
	C 03				Str				

Use when construction drawings are to be reproduced full size

FIGURE E-4
R/C MONOLITHIC CONDUIT DETAIL
EWP Unit Portland, Oregon

Alternate 1

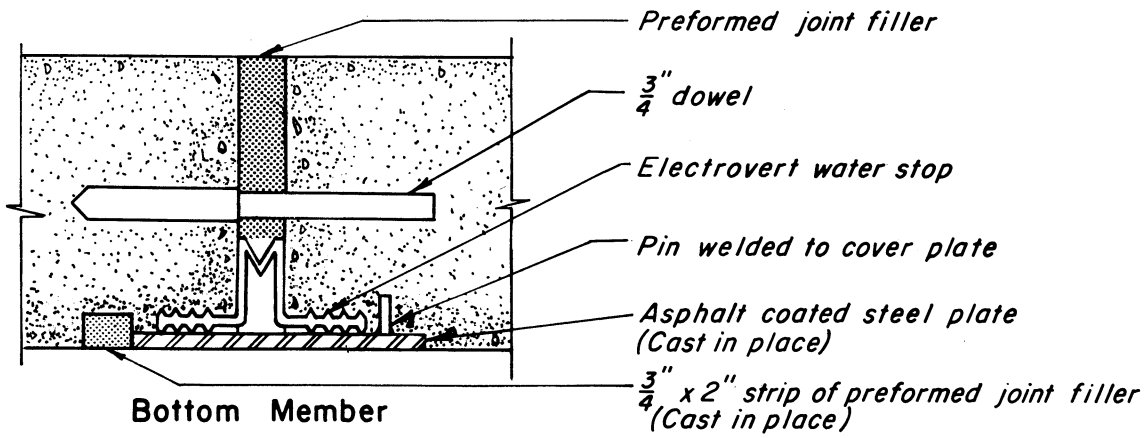

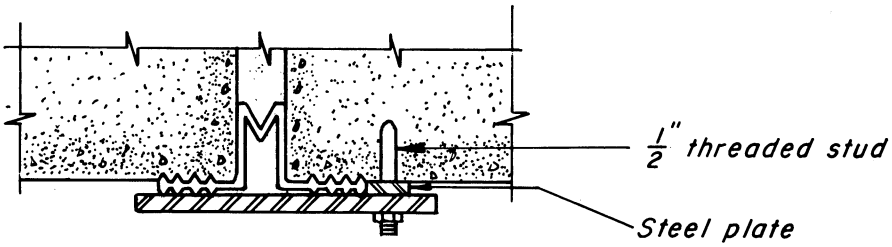

Alternate 2

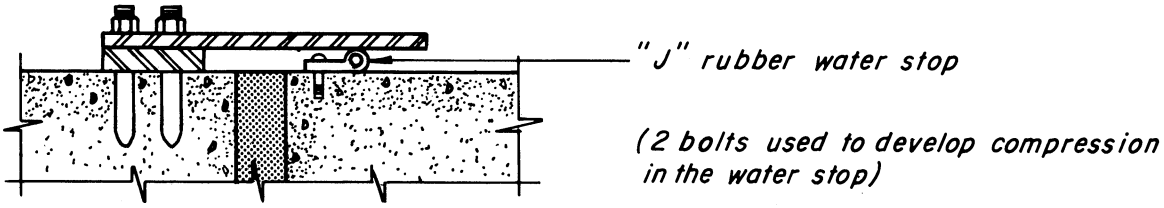

Alternate 3

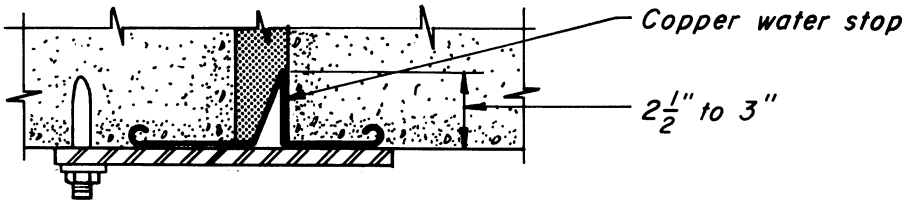

FIGURE E-5

MONOLITHIC OUTLET CONDUIT JOINT DETAILS

EWP Unit Portland, Oregon

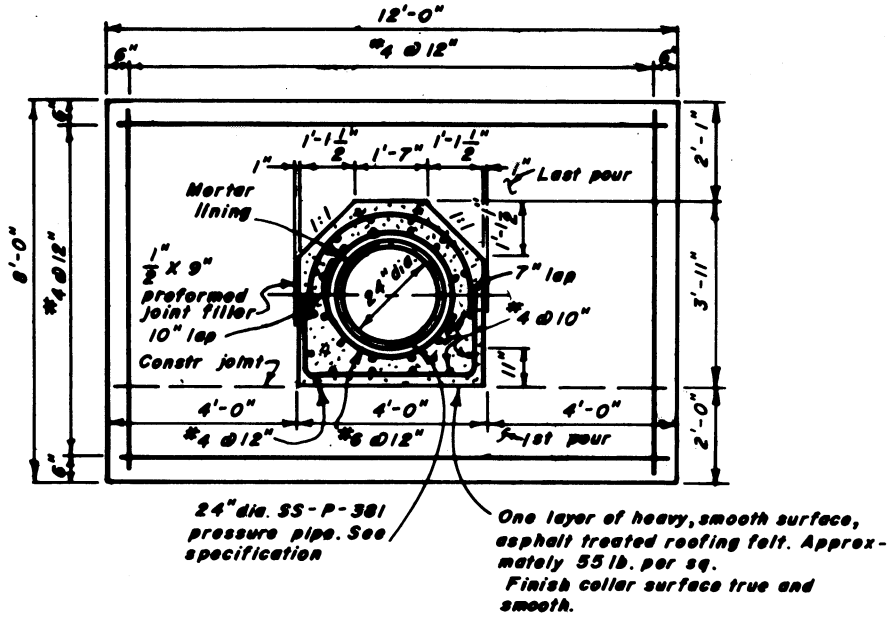

FRONT ELEVATION

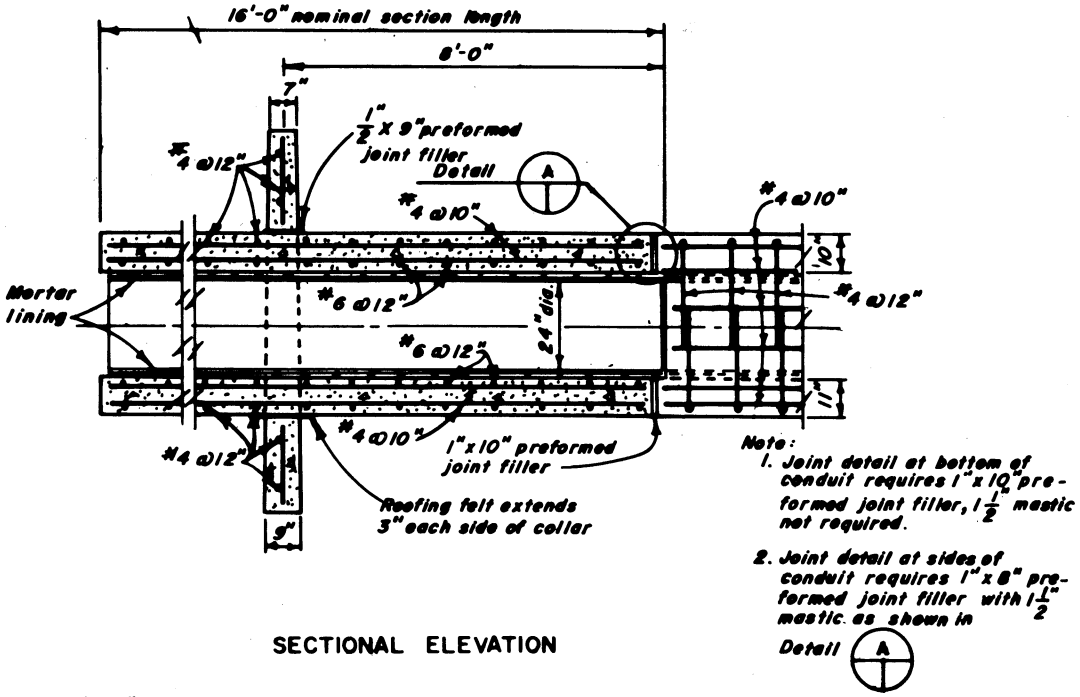

SECTIONAL ELEVATION

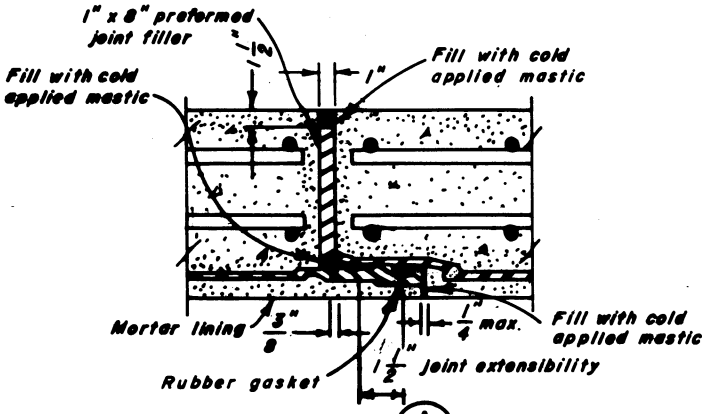

DETAIL A

NOT TO SCALE

OUTLET CONDUIT AND ANTI-SEEP COLLAR

SCALE IN FEET

FIGURE E-6

OUTLET CONDUIT

COMPOSITE CONSTRUCTION

EWP Unit Portland, Oregon

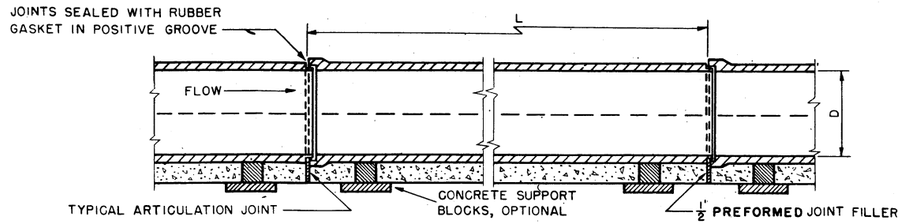

DETAIL OF PIPE CONDUIT
SECTION ON ℄–A2 CRADLE SHOWN

WHEN A1 CRADLE USED:
CUT LONGITUDINAL BARS AT 3" FROM EACH SIDE OF ARTICULATION JOINT. USE NO DOWELS.

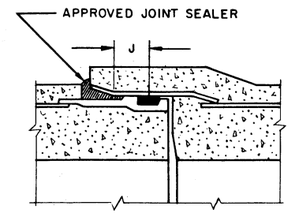

JOINT EXTENSIBILITY

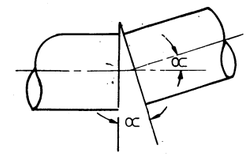

JOINT ROTATION CAPACITY

PIPE JOINT DISPLACEMENT CHARACTERISTICS

L	J	α
LENGTH OF PIPE SECTION	REQ'D JOINT EXTENSIBILITY	REQ'D JOINT ROTATION CAPACITY
FEET	INCHES	RADIANS

PRIOR APPROVAL OF PIPE AND PIPE JOINT DETAIL PROPOSED FOR USE, TO BE REQUIRED BY THE SPECIFICATIONS.

CLASS (a) DAMS MORE THAN 50 FT. HIGH, AND ALL CLASS (b) AND CLASS (c) DAMS

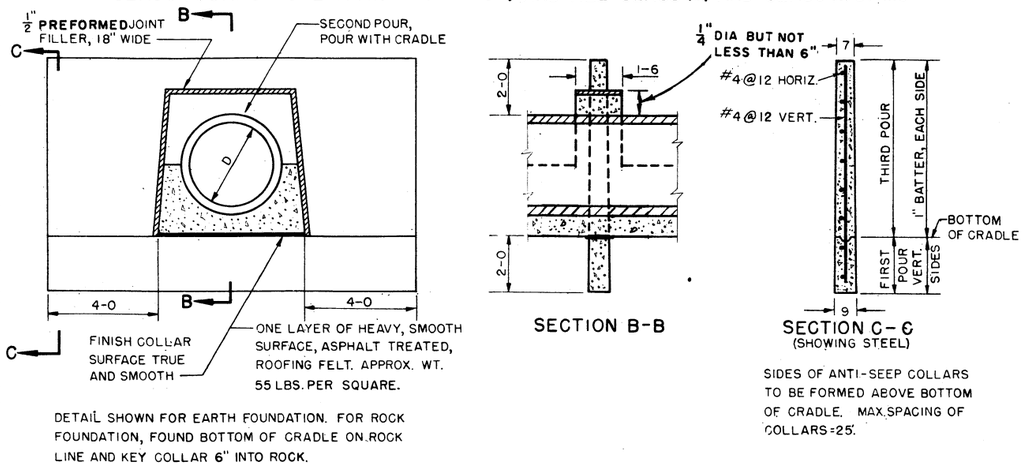

DETAIL SHOWN FOR EARTH FOUNDATION. FOR ROCK FOUNDATION, FOUND BOTTOM OF CRADLE ON ROCK LINE AND KEY COLLAR 6" INTO ROCK.

SIDES OF ANTI-SEEP COLLARS TO BE FORMED ABOVE BOTTOM OF CRADLE. MAX. SPACING OF COLLARS = 25'.

DETAIL OF ANTI-SEEP COLLAR

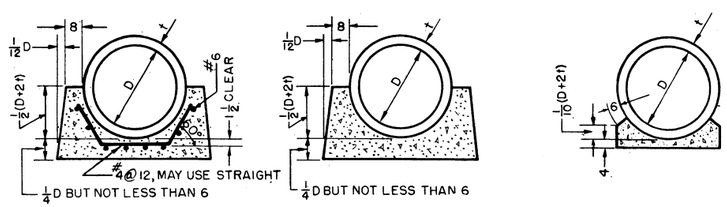

A1 CRADLE A2 CRADLE B1 BEDDING

ALTERNATE FOR CLASS (a) DAMS LESS THAN 50 FT. HIGH

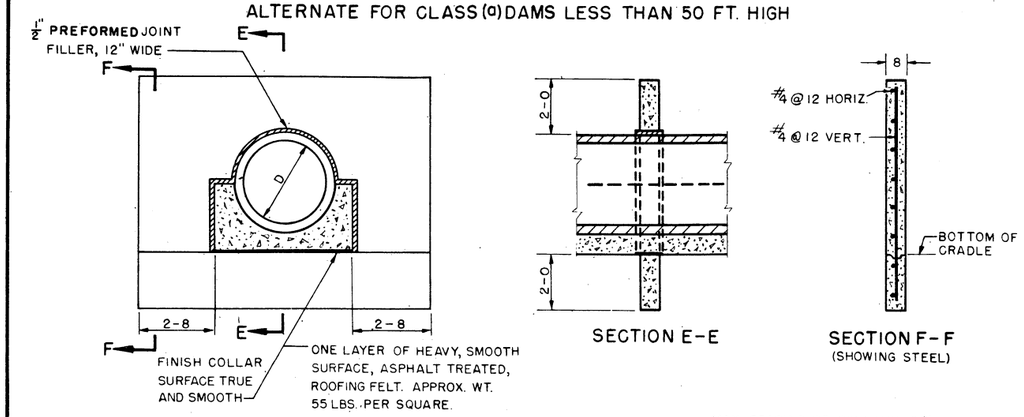

DETAIL SHOWN FOR EARTH FOUNDATION. FOR ROCK FOUNDATION, FOUND BOTTOM OF CRADLE ON ROCK LINE AND KEY COLLAR 6" INTO ROCK.

MAX. SPACING OF COLLARS = 25'.

DETAIL OF ANTI-SEEP COLLAR

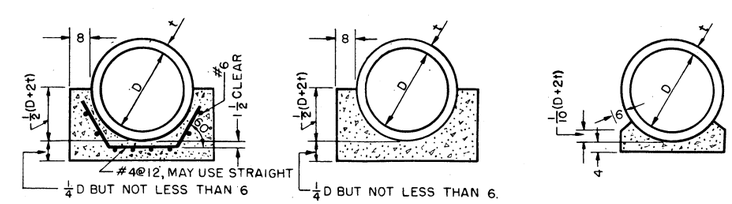

A1 CRADLE A2 CRADLE B1 BEDDING

PIPE AND CRADLE OR BEDDING ALTERNATES				
MINIMUM THREE EDGE BEARING TEST STRENGTH LOAD IN POUNDS PER LINEAL FOOT OF PIPE FOR CORRESPONDING PIPE AND CRADLE OR BEDDING				
CRADLE OR BEDDING	PIPE SPECIFICATION		LOAD TO PRODUCE NOT MORE THAN 0.01 INCH CRACK	LOAD TO PRODUCE NOT MORE THAN 0.001 INCH CRACK
A1	AWWA	C-300		
		C-301		
		C-302		
	ASTM	C 361		
A2	AWWA	C-300		
		C-301		
		C-302		
	ASTM	C 361		
B1	AWWA	C-300		
		C-301		
		C-302		
	ASTM	C-361		

SCOPE:

1. Pipe Diameters:
   D=24", 30, 36, 42, and 48

CRITERIA:

1. Materials (except pipe):
   Concrete: Class B, fc'=4000 psi, fc=1600 psi
   Reinforcing Steel: Intermediate grade
2. Applicable Criteria:
   Engineering Memorandum SCS-27
   Engineering Memorandum SCS-42 (rev. 2)
   Technical Release No. 5
   Technical Release No. 18

REFERENCE:
ES 154

FIGURE E-7
OUTLET CONDUIT DETAILS
EWP Unit Portland, Oregon

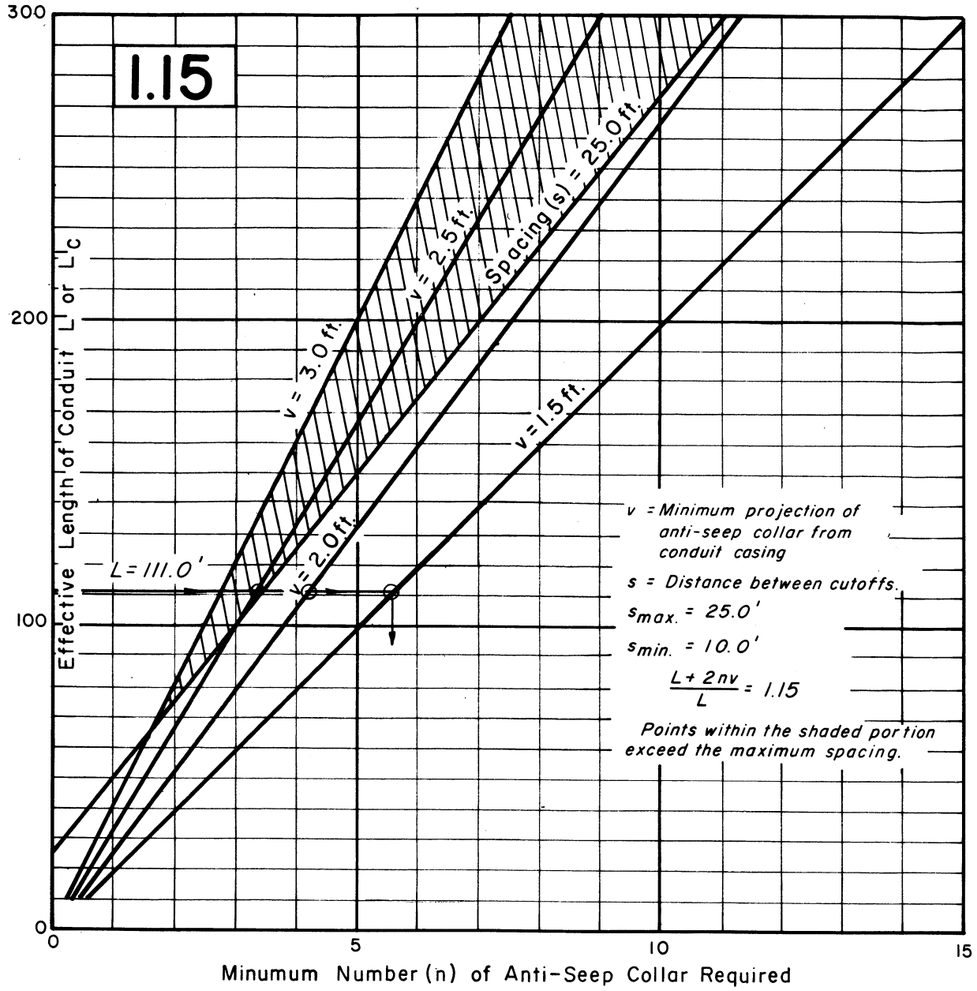

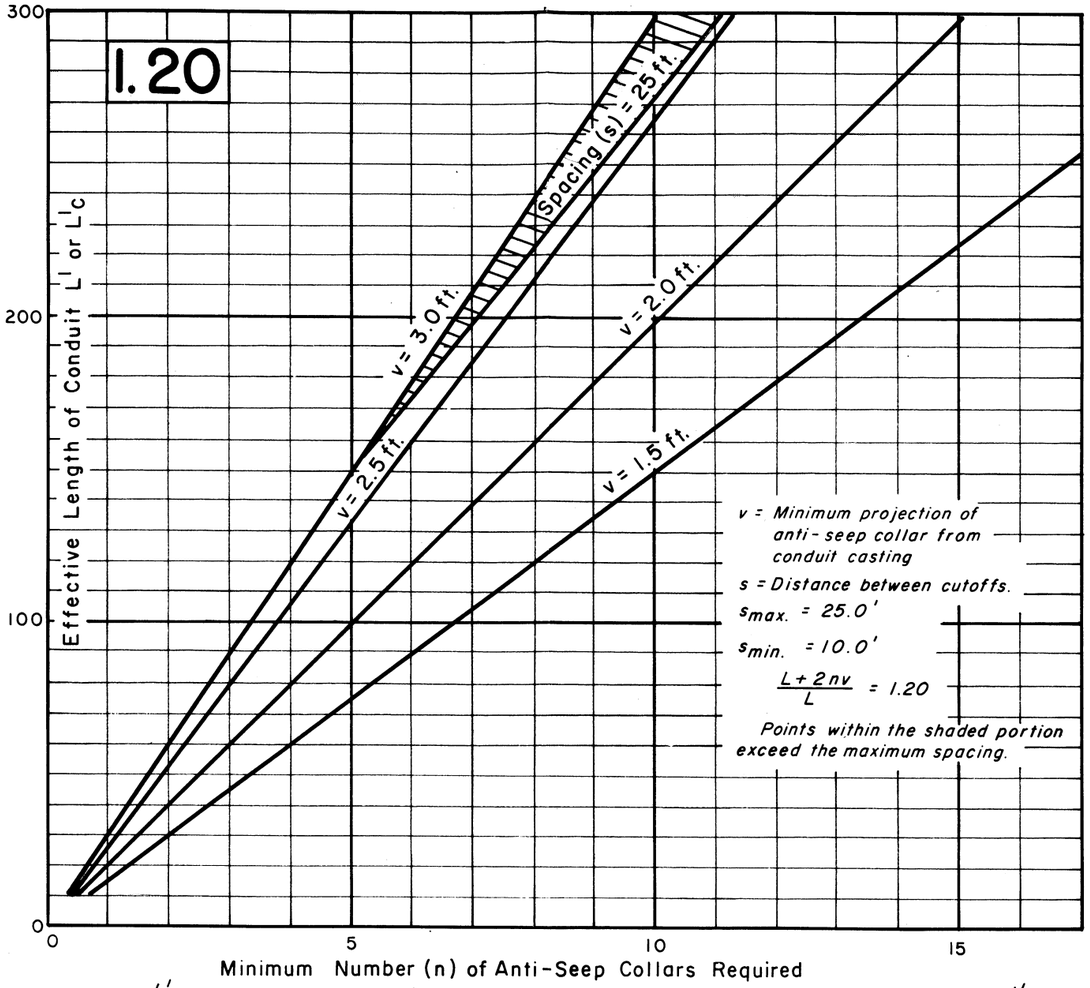

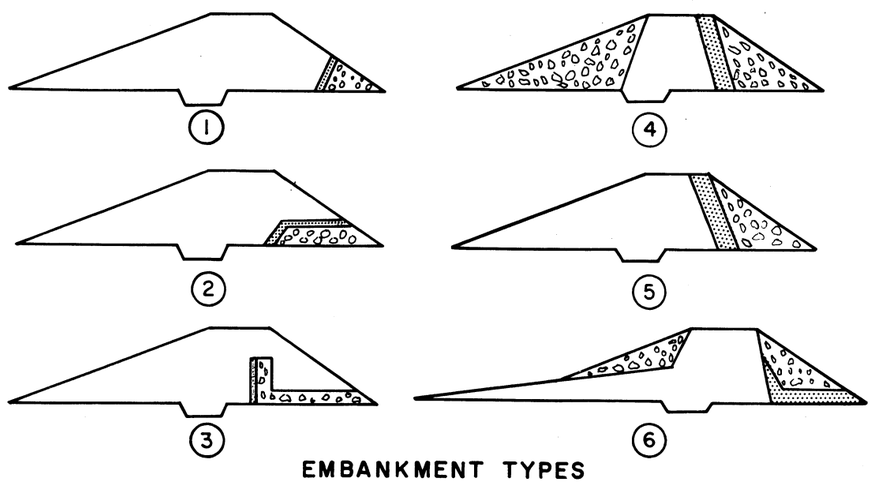

EMBANKMENT TYPES

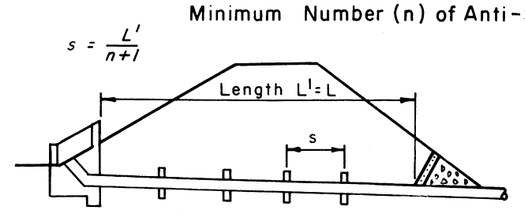

HOMOGENEOUS EMBANKMENT

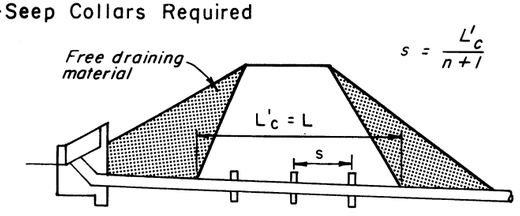

ZONED EMBANKMENT

Core material in zoned embankment

SOIL CLASSIFIATION	EMBANKMENT TYPE	USE CHART
CL	1, 2, 3, 5	1.15
CH	4, 6	1.15
MH	1, 2	1.15
CL	4, 6	1.20
MH	3, 4, 5, 6	1.20
ML, SM	1, 2, 3, 4, 5	1.20

FIGURE E-8

CONDUIT ANTI-SEEP COLLAR SELECTION CHART

EWP Unit Portland, Oregon

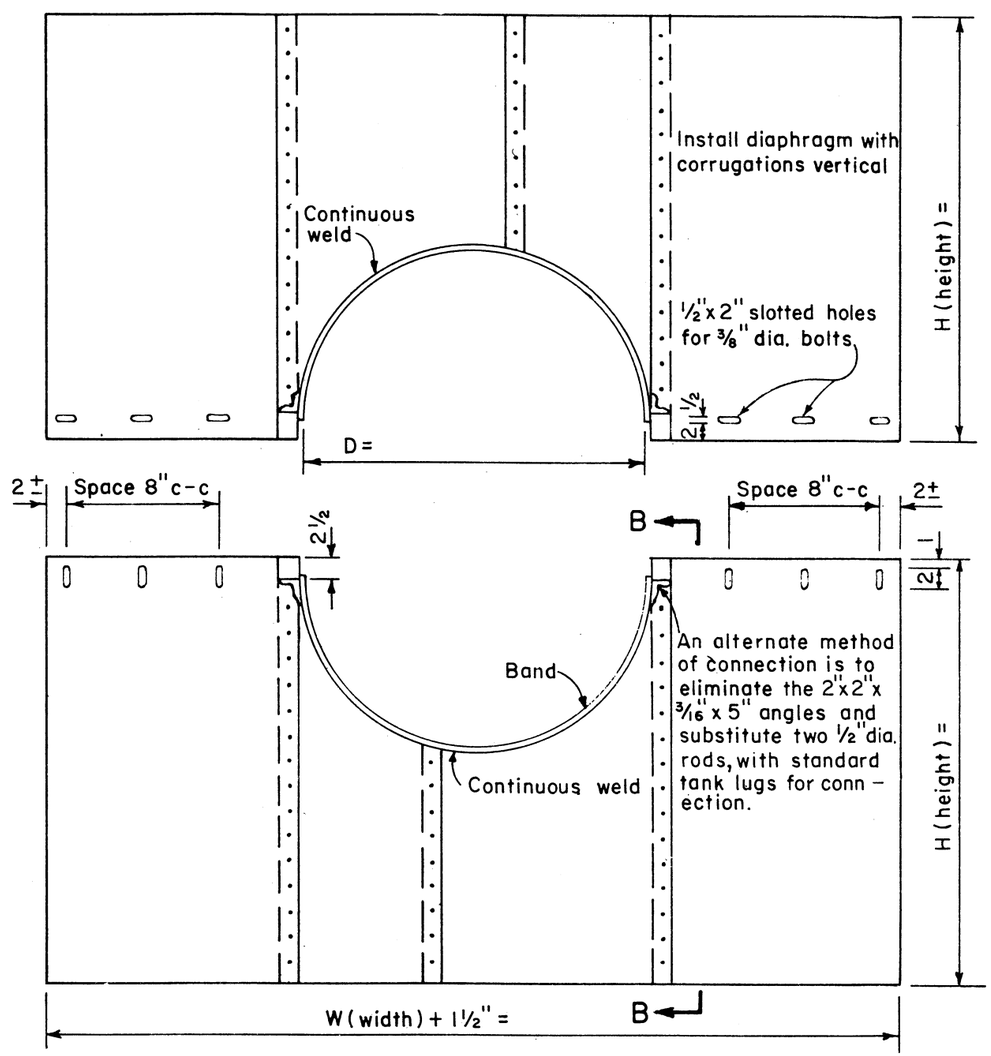

ELEVATION OF UNASSEMBLED DIAPHRAGM
(No scale)

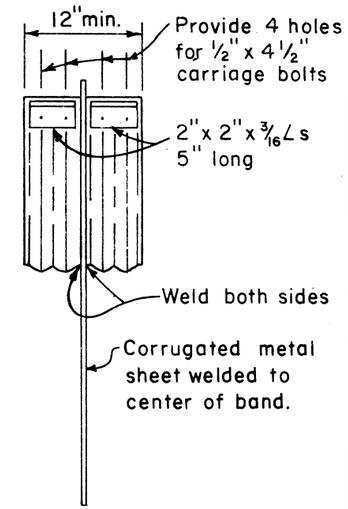

SECTION B-B

Notes:

1. All materials to be in accordance with applicable S.C.S. construction material specifications.
2. Unassembled diaphragms shall be marked by painting or tagging to identify matching pairs.
3. The lap between the two half sections and between the pipe and connecting band shall be caulked with asphalt mastic at time of installation.
4. Welding may be substituted for rivets in fastening 2" x 2" x 3/16" ∠s to pipe. Welds must be on each side of angles and on each corrugation ridge in contact with angle.
5. D = outside diameter of W.S. Pipe or nominal diameter of C.M. Pipe.
6. All corrugated metal pipe diaphragms shall be asphalt coated after shop fabrication has been performed.

FABRICATION TABLE FOR C.M. DIAPHRAGM

PIPE DIA.	GAGE *	GAGE **	NOMINAL DIAPHRAM SIZE	FABRICATION DIMENSIONS	
				W(WIDTH)	H(HEIGHT)
8	16	—	58 x 58	58 ½	30 ½
10	16	—	58 x 58	58 ½	30 ½
12	16	14	60 x 60	64	32 ½
15	16	14	63 x 63	68	34
18	16	14	66 x 66	69 ½	35 ½
21	16	14	69 x 69	72	37
24	14	14	72 x 72	72	38 ½
30	14	14	78 x 78	82 ½	41 ½
36	—	14	84 x 84	88	44 ½
42	—	14	90 x 90	93	47 ½
48	—	14	96 x 96	96	50 ½
54	—	14	102 x 102	101 ¼	53 ½

* Minimum gage for "Livestock Water Tanks and other dams not over 10 feet high.

** Minimum gage for all other dams - 12" dia. smallest size allowed.

FIGURE E-9
CORRUGATED METAL DIAPHRAGM
ANTI-SEEP COLLAR

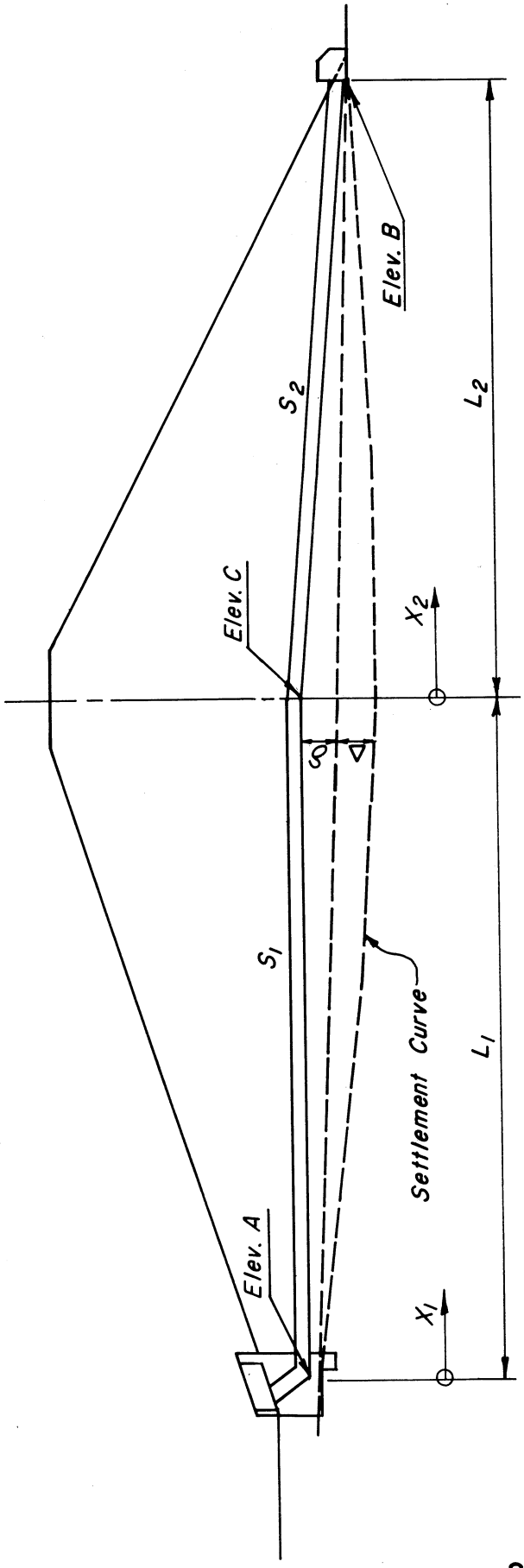

Δ = Max. settlement = δ_{max}

$S_1 = \frac{\text{Elev. A} - \text{Elev. C}}{L_1}$

$S_2 = \frac{\text{Elev. C} - \text{Elev. B}}{L_2}$

FIGURE E-10

SETTLEMENT CURVE AND SIMPLE CAMBER

EWP Unit Portland, Oregon

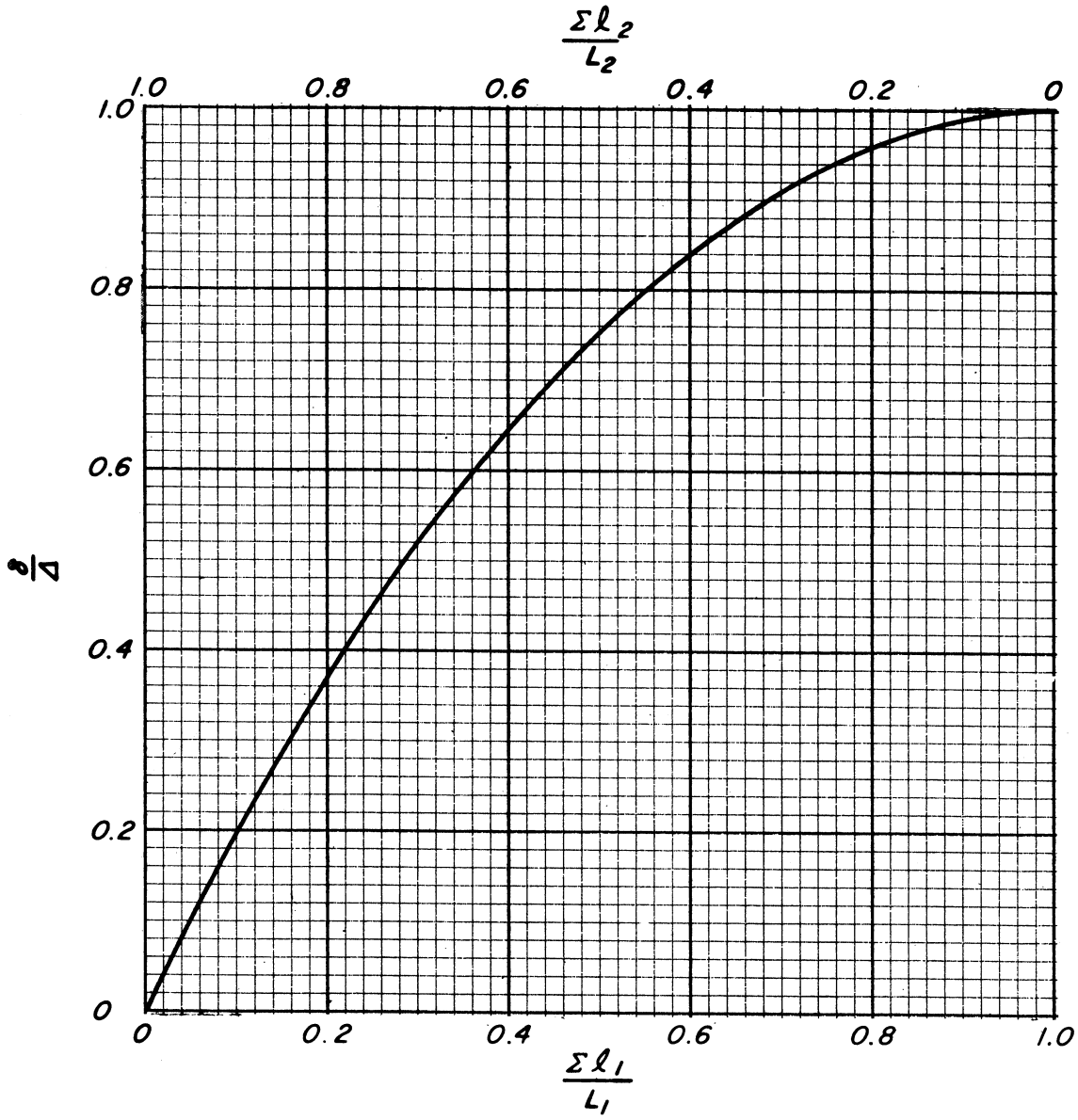

$$\delta = \frac{\Delta}{L_1^2} x_1^2$$

$$\delta = \Delta - \frac{\Delta}{L_2^2} x_2^2$$

FIGURE E-11

CONDUIT CAMBER ON PARABOLIC CURVE

EWP Unit Portland, Oregon

TABLE E-1

WALL THICKNESS
STANDARD R/C AND CYLINDER PIPE

Conduit	AWWA					ASTM	
Type / Inside Diameter inches	C-300	C-301 Lined Cylinder	C-301 Embedded Cylinder	C-302 f'_c = 6000 psi	C-302 f'_c = 4500 psi	C-361	C-76
	Wall Thickness t inches (minimum)						
12	-	-	-	2	-	2	1-3/4
15	-	-	-	2	-	2	1-7/8
16	-	-	1	-	2-1/8	-	-
18	-	1-1/8	-	2-1/4	-	2-1/4	2
20	3-1/4	1-1/4	-	2-3/8	-	-	-
21	-	-	-	2-3/8	-	2-3/8	2-1/4
24	3-1/2	1-1/2	2-1/4	2-1/2	3	2-1/2	2-1/2
27	-	-	-	2-5/8	3-1/4	2-5/8	2-5/8
30	3-1/2	1-7/8	2-1/4	2-3/4	3-1/2	2-3/4	2-3/4
33	-	-	-	2-7/8	3-3/4	2-7/8	2-7/8
36	4	2-1/4	2-1/4	3	4	3-1/8	3
42	4-1/2	2-5/8	2-5/8	3-1/2	4-1/2	3-3/4	3-1/2
48	5	3	3	4	5	4-1/8	4
54	5-1/2	-	4	4-1/2	5-1/2	4-1/2	4-1/2
60	6	-	4-1/2	5	6	5	5

TABLE E-2

CAMBER DATA

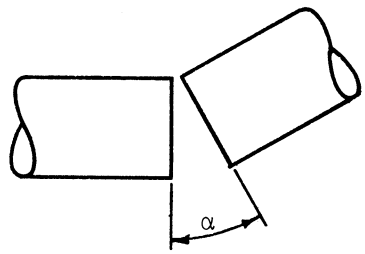

I. D. - In.	Approx. deflection per joint (α)	Sin α	Minimum radius of curve - 32 ft. lengths	Remarks
12	3° 05'	.0541	594'	Maximum joint gap = O.D. x sin α
18	2° 07'	.0366	867'	
21	1° 50'	.0315	995'	
24	2° 10'	.0384	841'	
27	1° 57'	.0345	938'	
30	1° 46'	.0312	1037'	
36	1° 29'	.0262	1230'	
42	1° 17'	.0227	1422'	

TABLE E-3

RECOMMENDED CORRUGATED STEEL PIPE GAGES

Conduit Diameter inches	Fill Height - feet			
	1 - 10	10 - 15	15 - 20	20 - 25
12 - 21	16	16	16	16
24	16	16	16	16
30	16	16	16	16
36	16	16	16	16
42	14	14	14	12

TABLE E-4

RECOMMENDED CORRUGATED OR SPIRAL ALUMINUM PIPE GAGES

Conduit Diameter inches	Fill Height - feet			
	1 - 10	10 - 15	15 - 20	20 - 25
12	16	16	16	16
18	16	16	16	14
21	16	16	16	14
24	16	14	14	12
30	14	14	14	12
36	14	12	12	10

SECTION F - OUTLET STRUCTURES

Contents

		Page
I.	INTRODUCTION	F-1
II.	CANTILEVER OUTLET	F-1
III.	PWD BASIN	F-2
IV.	IMPACT BASIN	F-3
V.	SAF BASIN	F-4
VI.	OTHER OUTLETS	F-6
VII.	OUTLET SELECTION CHART	F-6
VIII.	EXAMPLE	
	A. Problem 1	F-7
	B. Problem 2	F-7

Figures

F-1	PWD Outlet Structure	F-21
F-2	Impact Basin Outlet Structure	F-23
F-3	Riprap Size Selection Curves	F-25
F-4	Cantilever Outlet Plunge Pool	F-27
F-5	Cantilever Bent Selection Chart	F-29
F-6	Cantilever Outlet Bent (ES-105)	F-31
F-7	Cantilever Outlet Bent (ES-106)	F-33
F-8	Cantilever Outlet Detail (ES-107)	F-35
F-9	Cantilever Outlet Timber Bent	F-37
F-10	Construction Drawing - PWD Basin	F-39
F-11	Outlet Structure Selection Chart	F-41

SECTION F - OUTLET STRUCTURE

I. INTRODUCTION

Flow from the reservoir through the outlet conduit may be carried for some distance through an irrigation pipeline distribution system or discharged just beyond the toe of the embankment. In any event, water will emerge at relatively high velocity whether discharging submerged in a pool or freely into the air. Where it is to be carried in an earth channel, an outlet structure is required to dissipate or absorb excess energy. The flow should pass into the earth channel at non-erosive velocities for all stages of discharge to prevent undermining of the outlet.

Several types of outlet structures have been used successfully in Service work. Conditions under which each of four types should be used has been described in terms of hydraulic limitations and economics on Figure F-11.

The structure most subject to variation in cost due to site conditions is the cantilever outlet and its plunge pool. This is especially true if the pool requires armor plating. The other types compared are the PWD, Impact, and the SAF basins.

II. CANTILEVER OUTLET

The cantilever outlet is a low cost terminal structure that depends on turbulence in a plunge basin for energy dissipation. Its economy is most apparent in situations where the soil material in the downstream channel is erosion resistant. Its economy is also evident when rock is readily available and cheap and used as an armor plating of the plunge basin where the foundation material is less erosion resistant. Whether armor plating with rock or not, a preformed scour hole is recommended. If not preformed, the material scoured from the plunge basin will be deposited in the channel downstream forming an artificial barrier raising the tailwater level and possibly submerging the outlet to affect the hydraulics of the conduit system. It is important that the jet trajectory have some drop from the conduit to pool water surface for better energy dissipation within the pool.

A schematic diagram and nomenclature of the cantilever outlet and the stilling basin is given on Figure F-4. Design criteria for proportioning the basin is given in SCS Design Note No. 6. The value of p in Figure F-4 should be a minimum of one foot. For calculating quantities above the plane of the downstream channel invert, the following equation is given as supplementary to those of Design Note No. 6:

$$V = \frac{\pi y}{108} (32.65h^2 + 61ha_2 + 28.23a_2^2 + 26.165ya_2 + 28hy + 12y^2)$$

The nomenclature is that given on Figure F-4 except that y is the vertical distance to the upper level plane of excavation or riprap. The area of the downstream channel entrance is included in the volume and must be deducted from the rock quantities.

Information on structural details for the cantilever outlet is given in Figure F-5 through F-9. In all cases the bottom of the cantilever bent should extend to a level below that of the basin bottom, unless it rests on rock.

Use of the cantilever outlet should be restricted to sites where it is compatible with the surrounding improvements and piping is not a foundation problem.

On occasion a submerged outlet has been used; these should be limited in use to small outlets and low system heads. No design criteria is given here for the proportioning of this outlet type.

III. PWD BASIN

PWD is an abbreviation for Public Works Department. This basin is recommended for low head systems. A diagram of this structure and its proportions for various head-conduit diameter combinations is given in Figure F-1. For effective operation, this structure depends on the formation of a hydraulic jump for energy dissipation, consequently tailwater is an important consideration. Plate F-1 illustrates faulty operation as a result of inadequate tailwater. The crest of the outlet sill should be set at the same elevation as the invert of the conduit outlet. Flow velocities in the downstream channel should be in the subcritical velocity range with normal depth equal or greater than critical depth at the structure sill. Riprapping the bottom and sides of the channel for a distance of four conduit diameters downstream of the structure is recommended for shallow tailwater conditions. This will also provide transition protection when the channel is wider than the structure. Refer to Figure F-3 for rock riprap size.

A sample of a standard drawing for this type structure has been included in this section as Figure F-10.

PLATE F-1

IV. IMPACT BASIN

The impact basin is recommended for use with long duration flows and where the downstream water level will not meet the minimum tailwater requirements for the formation of a hydraulic jump. Entrance velocities should be restricted to less than 30 fps. Figure F-2 is a schematic diagram and a selection chart for various head-conduit size relations within the limits of the hydraulic capacity of this type of structure.

A short length of conduit leading directly into the impact basin should be level or set on a slight positive slope. During low flows, experience has shown the jet leaving a steeper conduit will miss the impact wall completely.

Impact basins should not be used with open top inlets where heavy or long debris can be expected unless an extensive trash rack is used.

Riprapping the bottom and sides of the downstream channel for a distance of four conduit diameters is recommended. Refer to Figure F-3 for riprap sizes.

For computing the hydraulics of a full flow conduit system using an impact basin, THE OUTLET WATER SURFACE SHOULD BE ASSUMED TO BE AT THE TOP OF THE BAFFLE WALL.

A sample of this structure has been included in the completed example in Section H as Figure H-5.

V. SAF BASIN

The St. Anthony Falls hydraulic laboratory developed an energy dissipating structure used extensively in the Service. This structure is known as the SAF basin. It is recommended for long duration flows, high entrance velocities and discharges in excess of 400 cfs. This structure has not been standardized because of the number of variables involved so that each installation is a separate design. NEH 14, "Chute Spillways", provides procedures for the hydraulic proportioning of the SAF basin.

The SAF basin depends on the hydraulic jump for energy dissipation. Unless tailwater satisfies the jump requirements over the major portion of the discharge range ineffective operation results. The ratio, TW/D_2, tailwater depth (TW) to depth required for the jump, (D_2), should be within the limits of 0.8 to 1.2 for the full range of discharge (see Plate F-2). However, for low discharge short duration flows the tailwater rating curve may exceed the TW/D_2 ratio of 1.2 without serious consequence.

Plate F-3 is an excellent illustration of malfunction in a SAF basin because of inadequate tailwater. Loss of a hydraulic control downstream or degradation of the channel is the usual cause of low tailwater. Because of low tailwater, the high velocity jet leaves the structure with little energy loss further aggravating the downstream scour problem.

Elevation of the SAF apron should be established by using the lowest roughness coefficient and a scoured grade line in the hydraulics of the downstream channel. Elevation of the top of the SAF sidewall should be checked using the highest roughness coefficient in the downstream hydraulics.

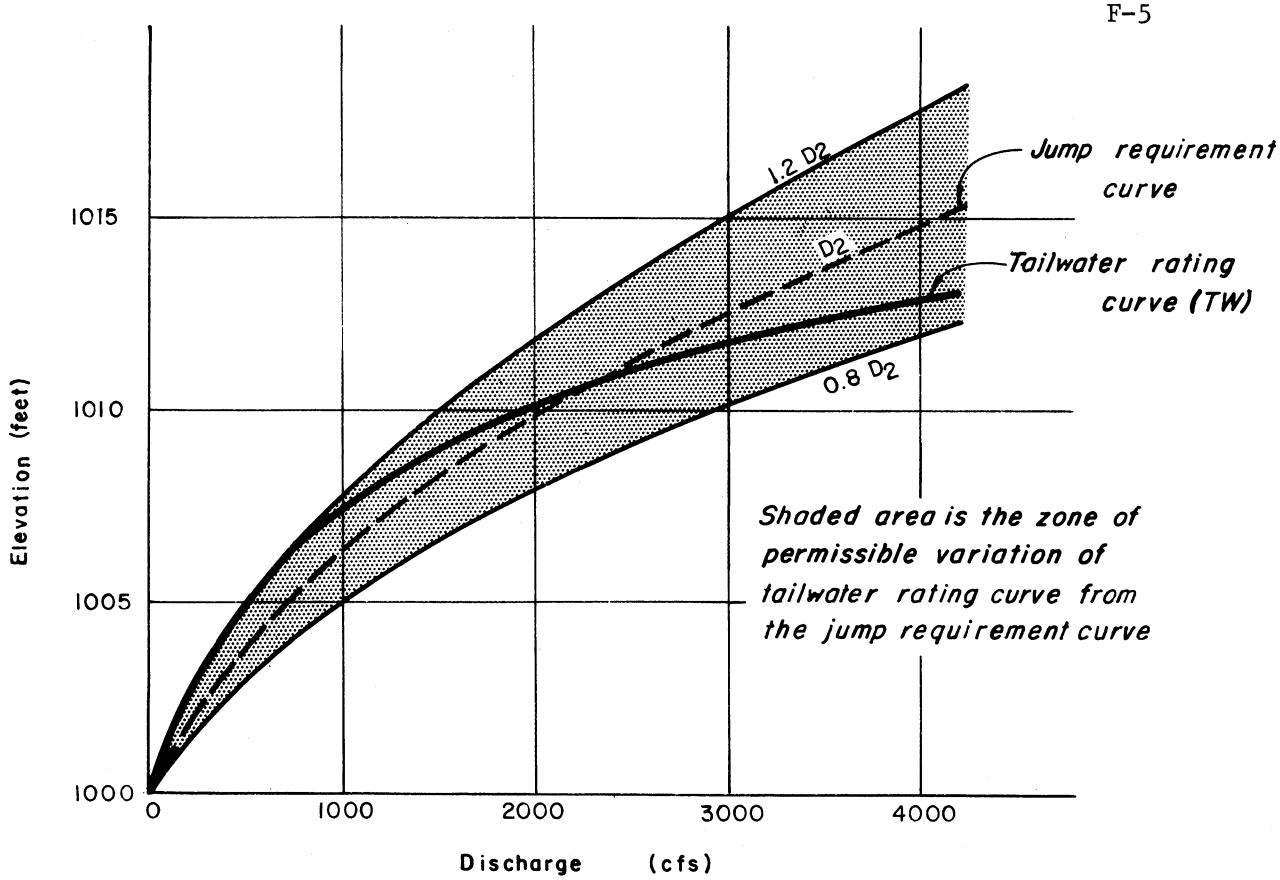

PLATE F-2

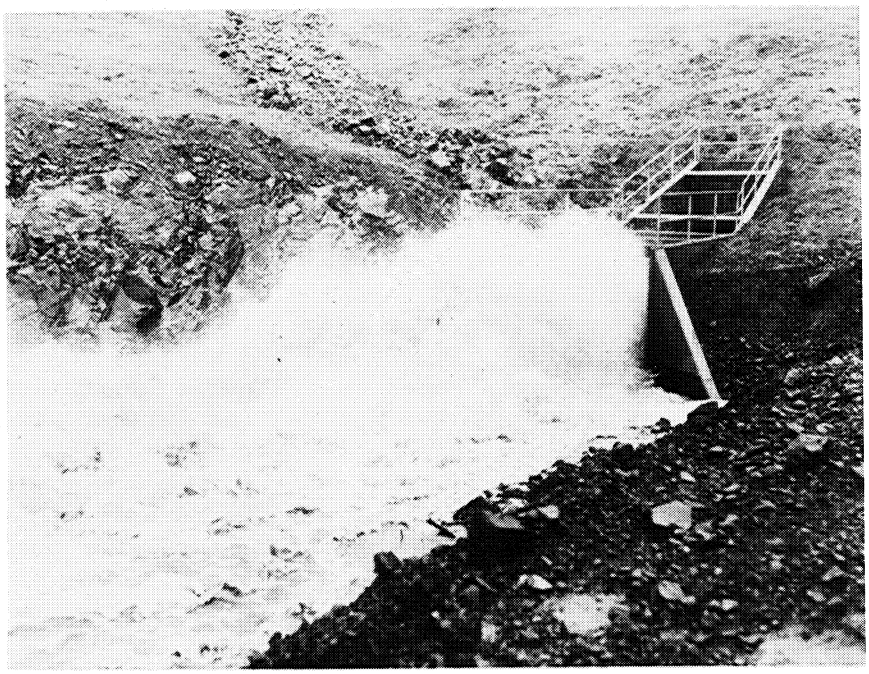

PLATE F-3

VI. OTHER OUTLETS

Several other types and variations of the above structures have been used in the past with success. These have been for special installations with limited application. Four deserving specific mention are the Manifold Outlet, Bianchi Bench, SCS Baffle, and the Submerged Outlet. No coverage of these structures is given here.

VII. OUTLET STRUCTURE SELECTION CHART

Figure F-11 is not intended as an all inclusive evaluation of outlets but rather as an aid to the less experienced in eliminating those choices between types of outlets hydraulically inadequate or economically undesirable for a given set of conditions.

This figure has been divided into two conditions:

Condition 1 - rock riprap is not required in cantilever outlet plunge basin, and

Condition 2 - rock riprap is required in cantilever outlet plunge basin.

Before using Figure F-11, the downstream channel conditions should be evaluated. If rock riprap is not required, Chart A in Condition 1 provides a choice between a cantilever outlet and a PWD basin. The PWD basin should be acceptable only if the tailwater requirement can be satisfied as described in the discussion of hydraulic jump (see Plate F-2). For conduit diameters to 30 inches the standard PWD structure is more economical. Above 30" conduit diameter, for low heads, a modified PWD standard structure is less expensive to construct. It is the designer's choice to use either the cantilever or to modify the standard PWD structure with the dimensions shown in Figure F-1.

If it has been determined that rock riprap is required downstream of the outlet structure, Condition 2 applies. When the unit cost ratio of reinforced concrete to rock riprap is less than 13, select a structure from Chart B. At this point the choice is between the SAF, Impact and PWD basins; the divisions between the three types is based on hydraulic limitations. Reference is made to Figure F-1 and F-2 for further size selection of the PWD or Impact basins.

However, if the unit cost ratio of reinforced concrete to rock riprap is greater than 13, the cost of a cantilever outlet with armor plated plunge pool should be compared with one of the three selected from Chart B.

VIII. EXAMPLE

By the time the system analysis has progressed to this point one of the conduits would have been selected for final design. To illustrate procedure a few comments are offered regarding those outlets suitable for conduits not used in the continuing example.

Ordinarily metal pipe (steel or CMP) would be cantilevered from a timber bent. Figure F-11 does not reflect the economy in initial construction for this combination of construction materials.

Both the 20" steel pipe and the 24" CMP would be cantilevered from a timber bent. Details for the bent can be found on Figure F-9. If the steel pipe is to be encased a R/C bent would be used and details from Figures F-6 through F-8 would be selected.

The example will be continued using the 21" R/C conduit.

A. Problem 1

Given: System head of 20 feet and 21" R/C conduit.

Determine: Type of outlet and construction drawing details.

Problem Analysis:

1. Evaluate need for armor plate in plunge pool.

2. Determine outlet type using Figure F-11.

3. Select appropriate structure size from Figure F-1, F-2, or F-4.

Solution: Referring to Figure F-11 with a head of 20 feet and a 21" conduit size, find choices:

1. If no armor plating is required, from Chart A select standard PWD basin size D. The drawing number can be found on Figure F-1.

2. If armor plating is required, from Chart B select impact basin and refer to Figure F-2 for size and standard drawing number.

B. Problem 2

Given: System head of 20 feet and 21" R/C conduit.

Determine: Construction cost and annual cost of alternate outlets and evaluate.

Problem Analysis:

1. Calculate construction costs for -

   a. Cantilever outlet unlined plunge pool
   b. Cantilever outlet with armored plunge pool
   c. PWD basin
   d. Impact basin

2. Calculate annual costs for each outlet.
3. Evaluate results.

Solution: In this comparison two alternate situations are considered:

1. Outlet control with the system head the same for all alternates.

2. Outlet elevation (downstream channel grade) the same for all alternatives.

These alternate conditions are presented to illustrate the need for having some idea of the outlet type during the initial hydraulic proportioning of the system.

For the construction cost comparisons the following unit prices will be used:

1.	Excavation, cu yd	
	Plunge basin and downstream channel	$0.50
	Structure	1.00
2.	Structure backfill, cu yd	1.00
3.	Rock riprap (include filter) cu yd	7.50
4.	Reinforced concrete, cu yd	100.00
5.	R/C conduit, lin ft	20.00

For the annual cost comparison the following factors will be used:

1. Annual maintenance (% of construction cost)

a.	Concrete structure	0.2
b.	Earth channel	4.0
c.	Rock Riprap	1.0
d.	Earth backfill	1.0

2. Project life - 50 years (no salvage value)

3. Interest rate - 6% crf - 6% - 50 = 0.06344

Calculations supporting construction and annual costs for three different outlet types are presented on the following pages F-11 through F-20.

From the cost summaries listed on page F-20 it can be seen that cost economy favors the PWD outlet for a comparable head condition. For the comparable downstream channel elevation the cantilever outlet with earth plunge pool is less costly. Any significant change in the unit price of construction or maintenance costs could change the most economical choice. This statement is especially true if rock riprap was readily available and the cost of concrete was high.

The choice of outlet structure has been reduced to the cantilever outlet and PWD basin. Final selection will depend on careful evaluation of the downstream conditions. From the data given a PWD basin would be recommended.

For purposes of illustration an impact basin has been used in the continuing example and included in Section H, Drawing Layout and Summary.

The importance of economics in design cannot be underrated, but the designer must not lose sight of the possibility of changes in the physical and functional requirements of the site, and the added safety the more costly structure might provide, such as:

1. The impact basin has more positive energy dissipation.

2. If offsite conditions make the tailwater rating curve unreliable, the cantilever basin would be a better choice.

3. If the outlet design condition is not the maximum flow condition and there could be periods of greater discharge, the PWD basin would be more susceptible to damage.

4. Aesthetic values of one outlet as compared to another outlet are a consideration, especially in a more intensely developed area.

COMPUTATION SHEET
SCS-523 REV 5-58

STATE Far West		PROJECT Gated Outlet		
BY H.W.F.	DATE 1-7-67	CHECKED BY	DATE	JOB NO.
SUBJECT Cantilever Outlet				SHEET ____ OF ____

Given:

$Q = 48$ cfs
$D = 21'' = 1.75'$
$v = 19.9$ fps
$a_2 - a_1 = 9''$ filter thickness
$d_{50} = 4''$ available size
$y = 3.0'$
$m = 6.25'$
$p = 2.75'$

$a_1 = (2.5)4 = 10''$ use $12''$
$a_2 = 12 + 9 = 21''$

Refer to SCS Design Note 6 for nomenclature and procedure

Volume of excavation above invert

$$V_{ex} = \frac{\pi y}{108}\left[32.65h^2 + 61ha_2 + 28.23a_2^2 + 26.165ya_2 + 28hy + 12y^2\right]$$

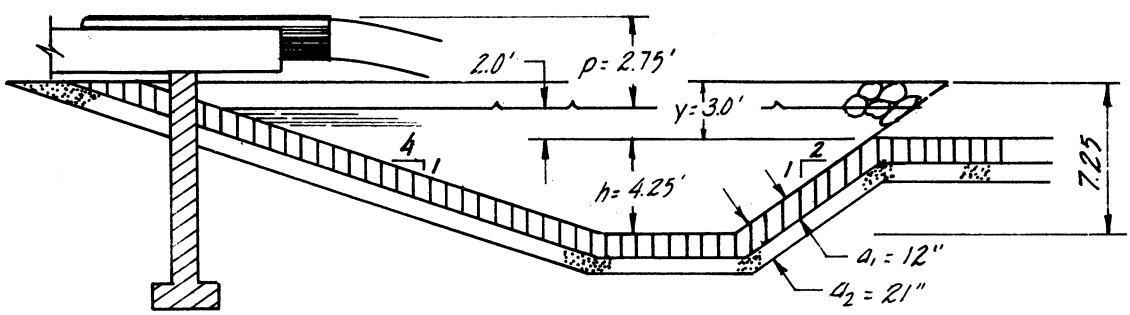

Determine

1. Pool depth
2. Unlined pool volume (assuming $d_{50} = 4''$ as natural material in ds channel)
3. Lined pool volume
4. Construction cost estimate

STATE Far West		PROJECT Gated Outlet		
BY H.W.F.	DATE 1-7-67	CHECKED BY	DATE	JOB NO.
SUBJECT Cantilever Outlet				SHEET ____ OF ____

Solution

① Pool depth

$$\frac{Q}{D} = \frac{48}{1.75} = 27.4$$

ES 182 2/7

$$\frac{h}{D^{1/3}} = 3.5$$

$$h = (1.75)^{1/3}\, 3.5 = 4.22 \quad \text{use } 4.25'$$

② Unlined pool volume

ES 182 4/7

Volume of excavation below invert
$h = 4.25 \quad a = 0 \quad = 28.5 \text{ yd}^3$

Volume of excavation above invert
$h = 4.25 \quad y = 3.0$

$$\forall ol_{ex} = \frac{\pi(3)}{108}\left[32.65(4.25)^2 + 28(4.25)(3) + 12(3)^2\right] = 92 \text{ yd}^3$$

Total volume unlined pool $92 + 28 = 120 \text{ yd}^3$

③ Lined pool volumes - excavation and rock riprap

Volume of excavation below invert
$h = 4.25 \quad a = 1.75 \quad = 74 \text{ yd}^3$

Volume of rock below invert $74.0 - 28.5 = 45.5 \text{ yd}^3$

Volume of excavation above invert
$h = 4.25,\ y = 3,\ a = 1.75$

$$\forall ol_{ex} = \frac{3\pi}{108}\left[32.65(4.25)^2 + 61(4.25)(1.75) + 28.23(1.75)^2 + 26.165\ 3(1.75) + 28(4.25)(3) + 12(3)^2\right] = 151 \text{ yd}^3$$

Total vol exc. $= 151 + 74 = 225 \text{ yd}^3$

Total vol rock $= 225 - 120 = 105 \text{ yd}^3$

COMPUTATION SHEET
SCS-523 REV 5-58

STATE Far West		PROJECT Gated Outlet		
BY H.W.F.	DATE 1-7-67	CHECKED BY	DATE	JOB NO.
SUBJECT Cantilever Outet				SHEET ___ OF ___

21"+2.5"+2.5"=26"

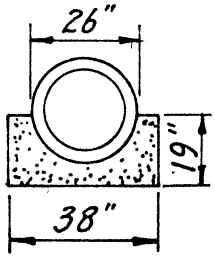

④ Cost construction estimate

Cradle 0.137 cu yd/ft (Table J-E4)
14'(0.137) = 1.92 yd^3
Bent (Fig F-5) = 0.95 yd^3

Σ Concrete Vol = 2.87 yd^3

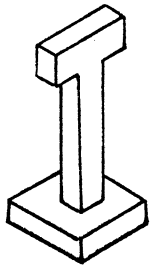

Unlined basin excavation 120 yd^3 @ \$0.50 = \$60.00

Armored basin excavation 225 yd^3 @ \$0.50 = \$112.00

Rock riprap 105 yd^3 @ \$7.50 = \$787.50

Structure excav. bent
Assume 5x5x11 pit = 275 ft^3
$\frac{275}{27}$ = 10.2 yd^3 @ \$1.00 \$10.20

Structure backfill
Structure excav. less structure concrete
10.2 - 0.95 ≅ 9.25 @ \$1.00 \$9.25

Concrete cost
Cradle and bent 2.87 yd^3 @ \$100.00 \$287.00

U. S. DEPARTMENT OF AGRICULTURE
SOIL CONSERVATION SERVICE

GPO 1958 O—470867

STATE Far West		PROJECT Gated Outlet		
BY H.W.F.	DATE 1-7-67	CHECKED BY	DATE	JOB NO.
SUBJECT Impact Basin				SHEET ____ OF ____

Cost Estimate

Given: Q = 40 cfs

Find: Structure width = 7'-0"
Std. Drwg. No. ES 4070-040 } Figure F-2

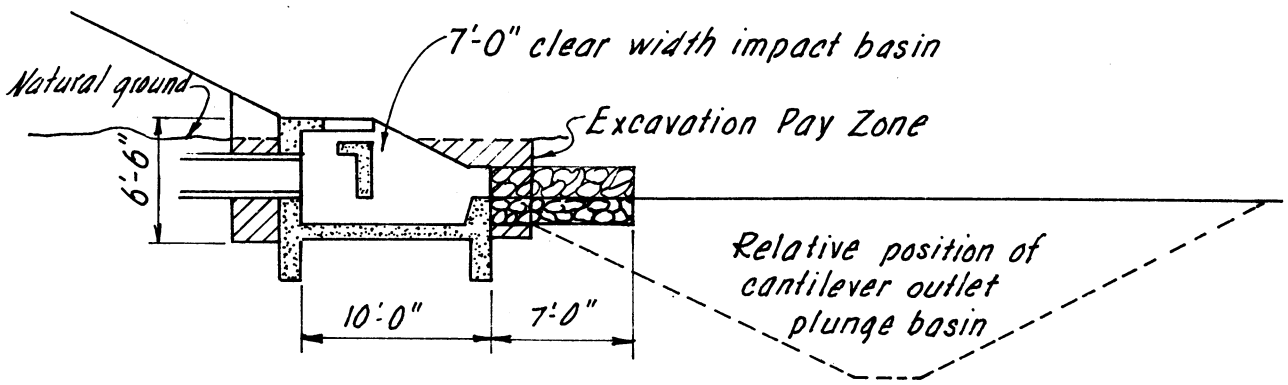

Volume Structure Excavation

Assume vertical payline 2'-0" clear of structure average 4.5' deep

$$\left[\frac{(8.7+4)(10+4)}{27}\right] 4.5 = 29.6 \text{ cu yd}$$

Cost of Structure Excavation

29.6 @ $1.00 $ 29.60

Volume Concrete 8.0 cu yd (Est.)

Cost of Concrete 8.0 @ $100.00 $800.00

COMPUTATION SHEET
SCS-523 REV 5-58

STATE Far West		PROJECT Gated Outlet		
BY H.W.F.	DATE 1-7-67	CHECKED BY	DATE	JOB NO.
SUBJECT Impact Basin				SHEET ____ OF ____

Cost Estimate (cont.)

Volume of rock

$H = 20'$ $d = 21''$

Rock size $D_{50} = 5''$

Layer thickness $3D_{50} = 15''$ } Figure F-3

Filter $D_{50} = 5''$

Length of rock protection (4D) use 7'-0"

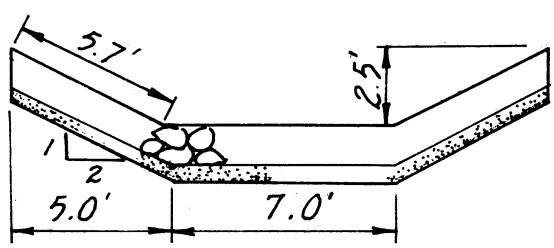

$2(5.7) + 7 = 18.4'$

$$\frac{(18.4)(7)\frac{20}{12}}{27} = 8.1 \text{ cu yd}$$

Volume of excavation

$$\frac{[(5.9)(5.0) + (4.2)(7.0)]\,7}{27} = 15.3 \text{ cu yd}$$

Cost of excavation

(15.3)(.50) $7.65

Cost of rock
(8.1)(7.50) $60.75

U. S. DEPARTMENT OF AGRICULTURE
SOIL CONSERVATION SERVICE

GPO 1958 O—470867

STATE Far West		PROJECT Gated Outlet		
BY H.W.F.	DATE 1-7-67	CHECKED BY	DATE	JOB NO.
SUBJECT PWD Basin				SHEET ____ OF ____

Cost Estimate

Given: Q = 40 cfs

PWD Basin Structure size D

Find: Cost Estimate

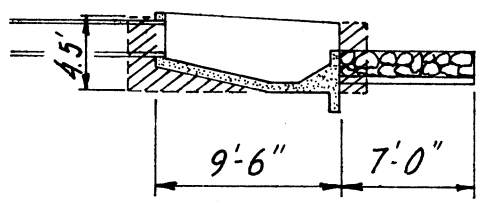

Volume of Structure Excavation

Assume vertical payline 2.0' clear of structure average 4.5' deep

front width = 8.25 + 2(0.75)
= 9.75'

rear width = 2.42 + 2(0.75)
= 3.92

$$\left[\frac{\left(\frac{9.75+3.92}{2}+4\right)(9.5+4)(4.5)}{27}\right] = 24.4 \text{ cu yds}$$

Cost of Structure Excavation

24.4 @ $100.00 $24.40

Volume of Concrete 3.6 cu yds

Cost of concrete @ $100.00 $360.00

Structure Backfill

$$\text{volume} = \left(\frac{8+10+10}{27}\right)(2)(4.5) = 9.3 \text{ cu yds}$$

cost of structural backfill $9.30

COMPUTATION SHEET
SCS-523 REV 5-58

STATE Far West		PROJECT Gated Outlet		
BY H.W.F.	DATE 1-7-67	CHECKED BY	DATE	JOB NO.
SUBJECT PWD Basin				SHEET ____ OF ____

Cost Estimate (cont.)

Volume of Rock

$H = 20'$ $d = 21''$

Rock size $d_{50} = 5''$

Layer thickness $= 3D_{50} = 15$

Filter $D_{50} = 5''$

Length of rock protection $= (4D) = 7.0$ ft

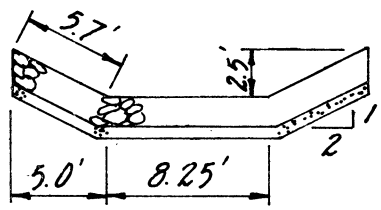

$2(5.7) + 8.25 = 19.65$

$$\frac{(19.65)\,7\left(\frac{20}{12}\right)}{27} = 8.5 \text{ cu yds}$$

Volume of Excavation

$$\left[\frac{(5.9)(5.0) + 4.2\,(8.25)}{27}\right]7 = 16.6 \text{ cu yds}$$

Cost of Excavation
$= 16.6\,(0.50)$ $\$8.30$

Cost of Rock
$= 8.5\,(7.50)$ $\$63.75$

U. S. DEPARTMENT OF AGRICULTURE
SOIL CONSERVATION SERVICE

GPO : 1958 O—470867

STATE Far West		PROJECT Gated Outlet		
BY H.W.F.	DATE 1-7-67	CHECKED BY	DATE	JOB NO.
SUBJECT Alternate Comparison				SHEET ____ OF ____

Relative Location of Alternate Outlets

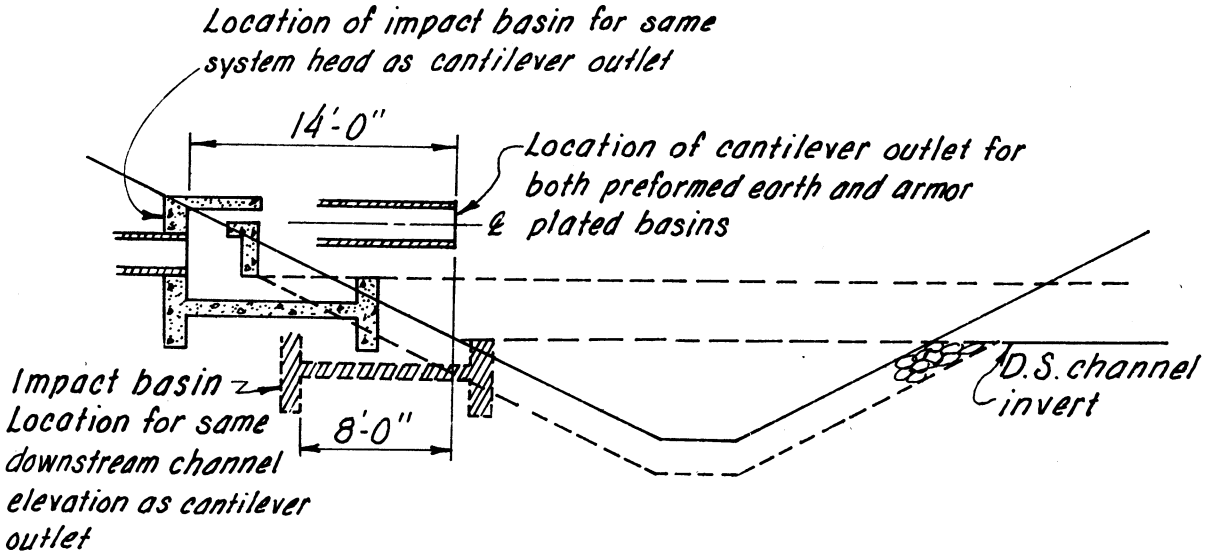

Relative Location of Alternate Outlet

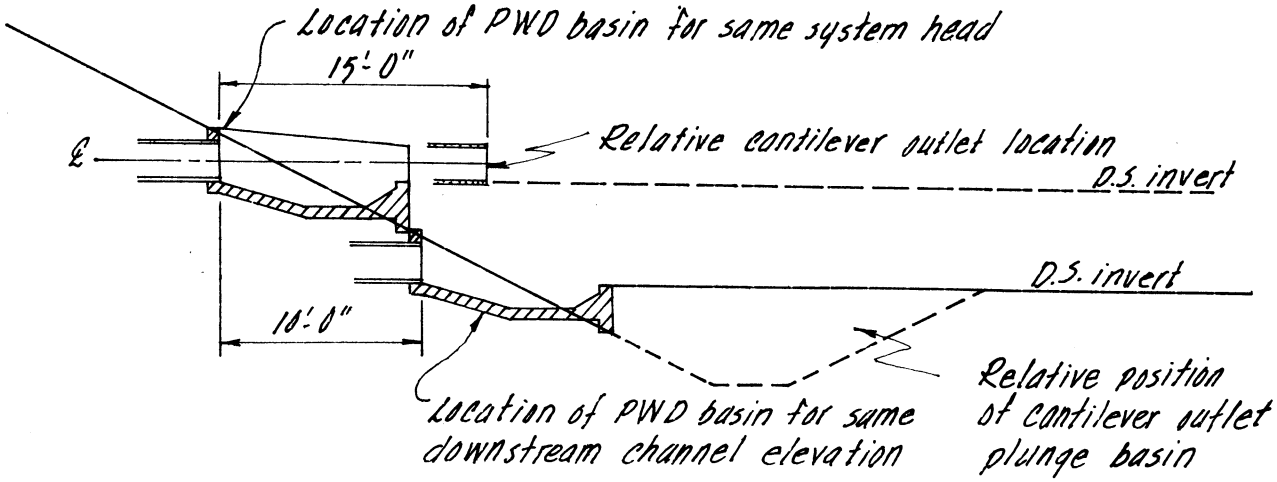

COMPUTATION SHEET
SCS-523 REV 5-58

STATE Far West		PROJECT		
BY H.W.F.	DATE 1-7-67	CHECKED BY	DATE	JOB NO.
SUBJECT Alternate Comparison				SHEET ____ OF ____

Annual Cost[11]

1. Cantilever Outlet - earth pool (comparable D.S. elevation or comparable system head)

a.	Annual cost conc. maint. = (95+192) 0.002	0.57
b.	Annual cost earth maint. = (60.00) 0.04 + 10.20 (0.01)	2.50
c.	Capital recovery = 0.06344 (646.70)	41.03
	TOTAL ANNUAL COST	$44.10

2. Cantilever Outlet - armor plate pool (comparable D.S. elevation or comparable system head)

a.	Annual cost conc. maint. = (95+192) 0.002	0.57
b.	Annual cost rock riprap maint. = (787.50) 0.01	7.88
c.	Capital recovery = 0.06344 (1486.90)	94.33
	TOTAL ANNUAL COST	$102.78

3. Impact Basin - comparable D.S. elevation

a.	Annual cost conc. maint. = (881.80) 0.002	1.77
b.	Annual cost rock riprap maint. = (60.75) 0.01	0.61
c.	Capital recovery = 0.06344 (1110.30)	70.44
	TOTAL ANNUAL COST	$72.82

4. PWD Basin - comparable D.S. elevation

a.	Annual cost conc. maint. = (483.00) 0.002	0.97
b.	Annual cost rock riprap. maint. = (63.75) 0.01	0.64
c.	Capital recovery = 0.06344 (769.05)	48.78
	TOTAL ANNUAL COST	$50.39

5. Impact Basin

a.	Annual cost conc. maint. = (800.00) 0.002	1.60
b.	Annual cost rock riprap maint. = (60.75) 0.01	0.61
c.	Capital recovery = 0.06344 (908.50)	57.63
	TOTAL ANNUAL COST	$59.84

6. PWD Basin - comparable system head

a.	Annual cost conc. maint. = (360) 0.002	0.72
b.	Annual cost rock riprap maint. = (63.75) 0.01	0.64
c.	Capital recovery = 0.06344 (432.05)	27.41
	TOTAL ANNUAL COST	$28.77

[11] R/W not included

U. S. DEPARTMENT OF AGRICULTURE
SOIL CONSERVATION SERVICE

GPO : 1958 O—470867

STATE Far West		PROJECT Gated Outlet		
BY H.W.F.	DATE 1-7-67	CHECKED BY	DATE	JOB NO.
SUBJECT Alternate Comparison				SHEET ____ OF ____

Construction Cost Summary

Comparable Head	Cantilever Outlet		Impact Basin	PWD Basin
	Earth Pool	Armor Plated Pool		
1. Earthwork				
Pool Excavation	60.00	112.50	7.65	8.30
Structural Excavation	10.20	10.40	29.60	24.40
Structural Backfill	9.50	9.50	10.50	9.30
2. Reinf. Concrete				
Bent	95.00	95.00	—	—
Cradle	192.00	192.00	—	-13.70
Impact Basin	—	—	800.00	—
PWD Basin	—	—	—	360.00
3. Rock Riprap	—	787.50	60.75	63.75
4. Conduit	280.00	280.00	—	-20.00
Σ Construction Cost	$646.70	$1486.90	$908.50	$432.05
Comparable D.S. Elev.				
Δ Cradle	—	—	81.80	137.00
Δ Conduit	—	—	120.00	200.00
Σ Construction Cost	$646.40	$1486.90	$1110.30	$769.05

Annual Cost Summary

	Cantilever Outlet		Impact Basin	PWD Basin
	Earth Pool	Armor Plate Pool		
Comp. D.S. elev	$44.10	$102.78	$72.82	$50.39
Comp. Head	"	"	$59.84	$28.77

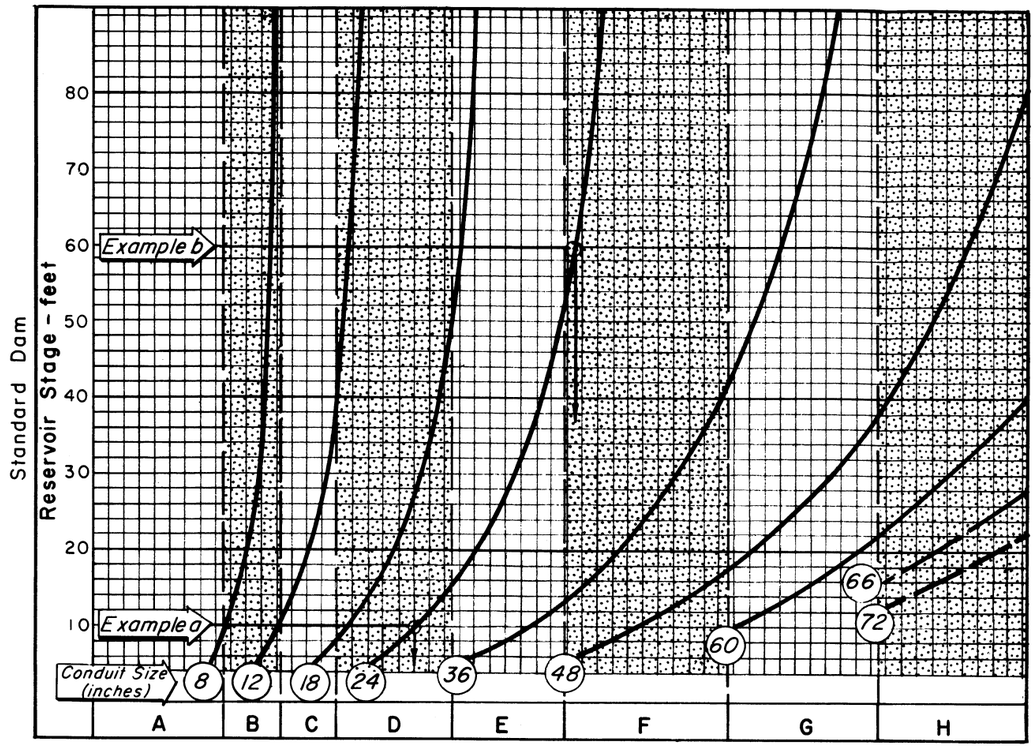

SIZE SELECTION CHART

SIZE / ITEM	STRUCTURE DIMENSIONS							
	A	B	C	D	E	F	G	H
Pipe Dia.	8"	10"-12"	12"-18"	18"-27"	30"-36"	36"-48"	48"-60"	60"-72"
Q-cfs	2-4	5-10	8-24	20-66	58-132	120-280	250-490	450-640
①	1'-0"	1'-0"	1'-6"	2'-3"	3'-0"	4'-0"	5'-0"	6'-0"
②	6"	6"	9"	1'-2"	1'-6"	2'-0"	2'-6"	3'-0"
③	1'-6"	2'-0"	3'-0	4'-6"	6'-0"	8'-0"	10'-0"	12'-0"
④	1'-0"	1'-6"	2'-3"	3'-4"	4'-6"	6'-0"	7'-6"	9'-0"
⑤	10"	1'-2"	1'-8"	2'-5"	3'-2"	4'-2"	5'-2"	6'-2"
⑥	2'-8"	3'-6"	5'-4"	8'-3"	11'-0"	14'-4"	17'-10"	21'-4"
⑦	2'-0"	2'-0"	2'-0"	2'-3"	3'-0"	4'-0"	5'-0"	6'-0"
⑧	6"	6"	6"	6"	7"	8"	9"	10"
⑨	2'-0"	2'-6"	3'-6"	4'-6"	6'-0"	8'-0"	10'-0"	12'-0"
Length	3'-6"	4'-6"	6'-6"	9'-6"	12'-7"	16'-8"	20'-9"	24'-10"
Vol. Conc. Cu.Yd.	0.7	1.0	1.9	3.6	7.3	14.7	25.6	40.6
Rein. Steel	54#	76#	148#	274#	447#	742#	2364#	3373#
Std. Dwg. No.	7-E-20463 Suffixed by size letter							

EXAMPLE:

Select structure size for use with a 24" conduit and a
(a) 10' head
(b) 60' head

Enter chart with proper reservoir stage and project a horizontal line to conduit size. For the 10' head find size "D" directly. For the 60' head find size "F"

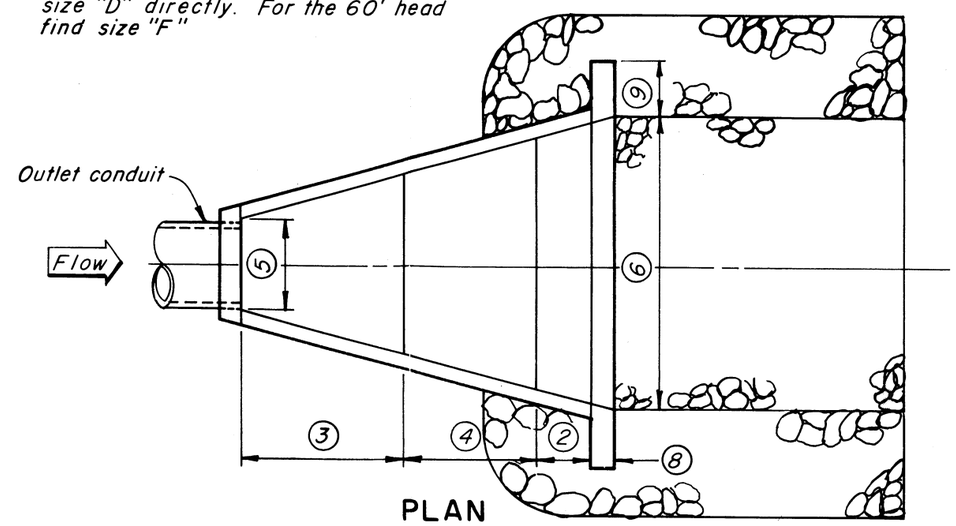

PLAN

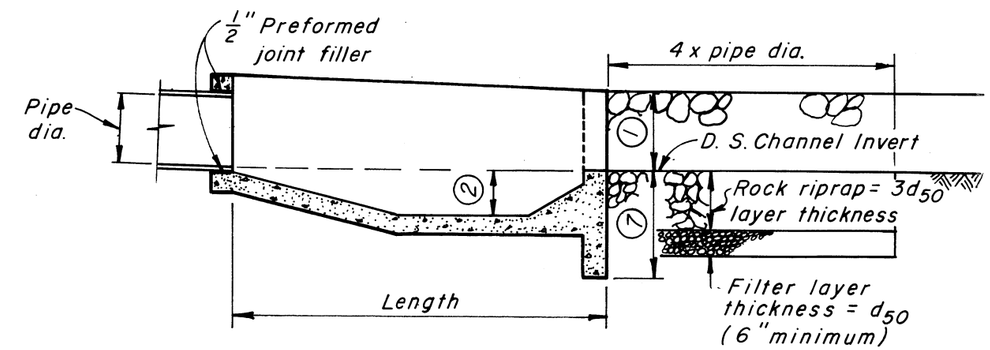

SECTIONAL ELEVATION

Modified Standard Size
Change the following dimensions

Size	⑤	⑥
D-1	2'-8"	8'-6"
D-2	3'-2"	9'-2"
E-1	3'-8"	11'-6"
E-2	4'-2"	12'-0"
F-1	4'-8	14'-10"
F-2	5'-2"	15'-4"
G-1	5'-8"	18'-4"
G-2	6'-2"	18'-10

Change quantities according

Refer to Appendix Table J-F1 for refinement in quantities for various conduit types and sizes

For riprap size selection curves for d_{50} see Figure F-3

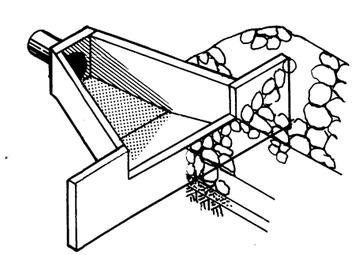

FIGURE F-1

P.W.D. OUTLET STRUCTURE

EWP Unit Portland, Oregon

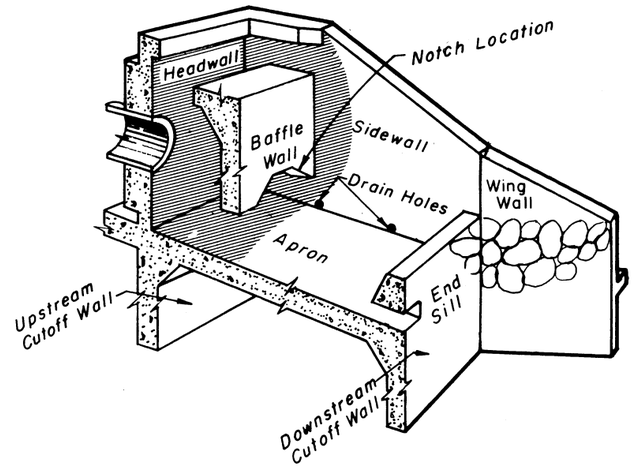

PERSPECTIVE VIEW

Example:

Conduit dia - - - - - - - 30 inches (full pipe flow)
Velocity - - - - - - - - 20 fps
At intersection find- - - - 10.4 ft basin width
Use standard structure size 11.0 feet

Structure Width feet	Conduit Dia Inches	Quantities *		Std. Drwg. No.
		Concrete-cu.yds.	Reinf. Steel-lbs.	
5	10-18	10.0	1500	ES 4050
6	12-21	12.5	1900	4060
7	15-24	15.0	2200	4070
8	18-30	20.0	2800	4080
9	21-33	23.0	3300	4090
10	24-36	28.0	3900	4100
11	27-42	33.0	4800	4110
12	30-48	38.0	5700	4120
13	33-51	43.5	6700	4130
13.5	33-54	46.5	7300	4135
14	36-57	50.5	7900	4140
14.5	36-57	55.0	8800	4145
15	39-60	58.5	10,000	4150
15.5	39-60	62.0	10,600	4155
16	42-63	65.0	11,000	4160
16.5	42-63	70.0	12,400	4165
17	45-66	73.5	13,300	4170
17.5	45-66	77.0	14,100	4175

* The quantities listed are approximate and vary with the size of the inlet conduit.

Revised 6-70

Reference: USDI Report # HYD-572

Note: The basin width selected shall be that width directly above or to the right of the intersection of the conduit diameter and velocity lines.

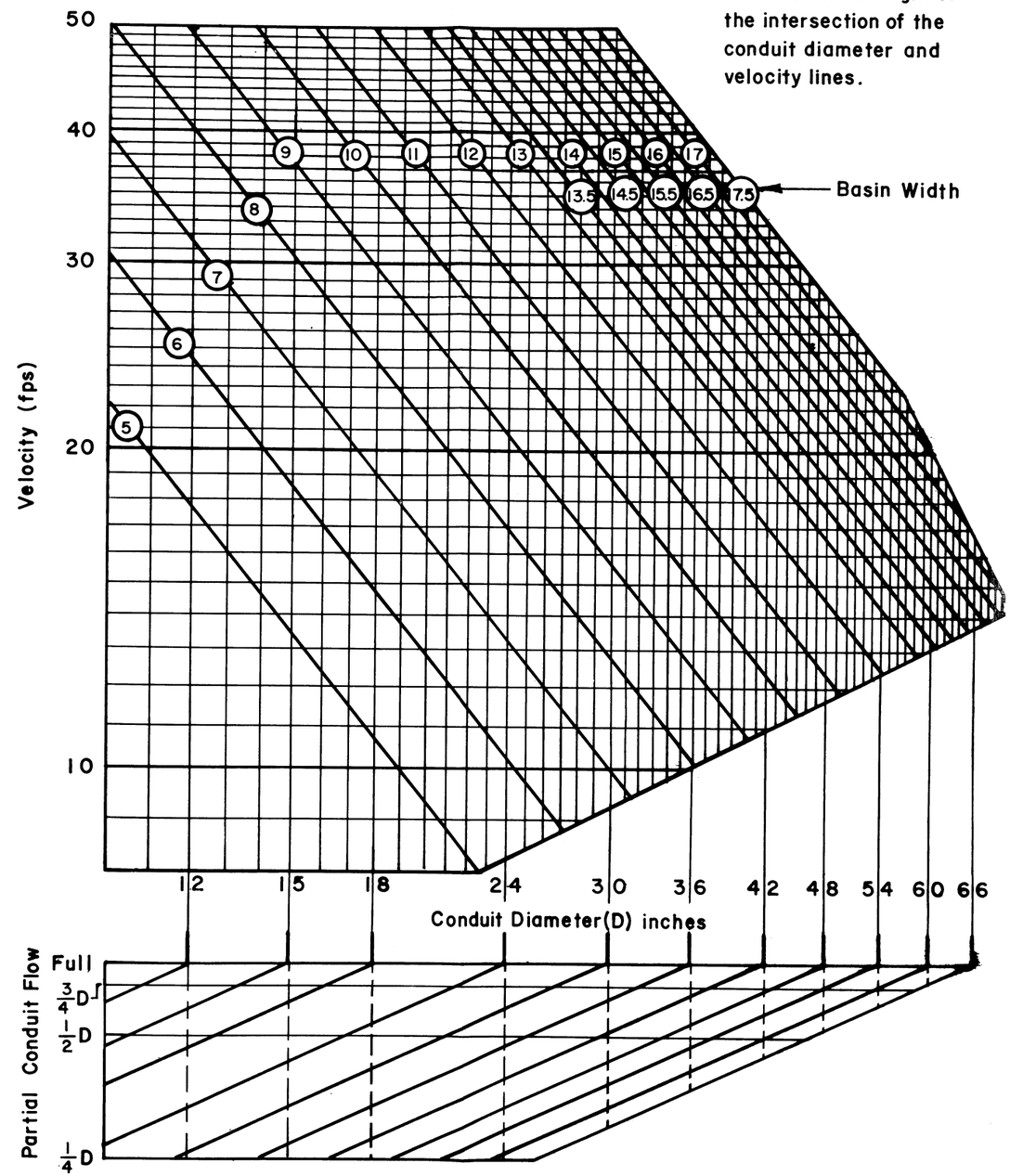

SIZE SELECTION CHART

PRELIMINARY

FIGURE F-2
IMPACT BASIN
OUTLET STRUCTURE
EWP Unit Portland, Oregon

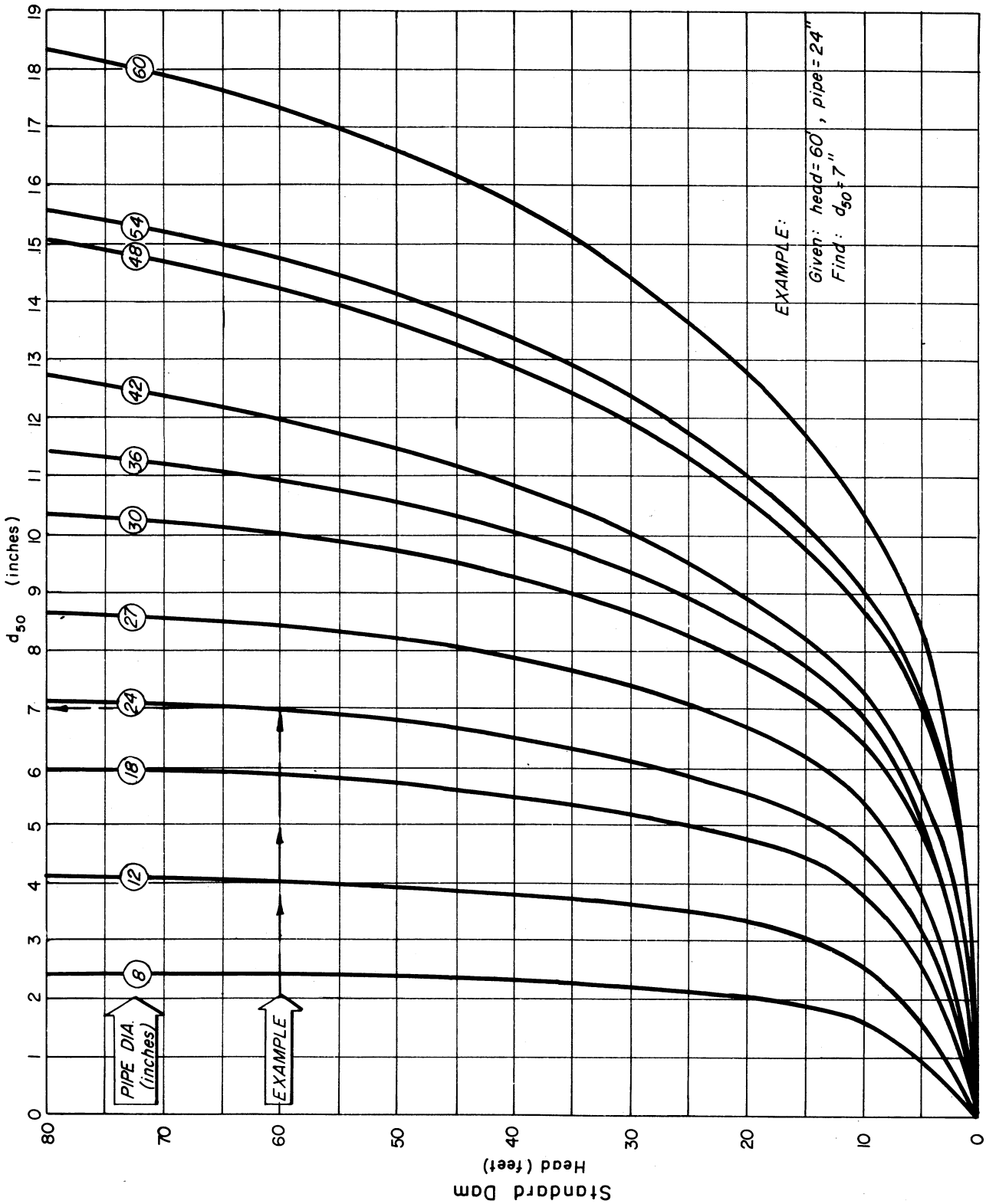

Equation analysis for d_{50}

$$d_{50} = \left[\frac{A_p^2 H}{b^2\left[2+(5.2H+28)k_p\right]}\right]^{\frac{1}{3}} (5.96)$$

A_p = Area of the pipe (ft.^{2})
H = Head (ft.)
b = bottom width (ft.)
k_p = Head loss coefficient for pipe

Riprap layer thickness = $3d_{50}$

Filter layer thickness = d_{50}

FIGURE F-3

RIPRAP SIZE SELECTION CURVES (d_{50})

EWP Unit Portland, Oregon

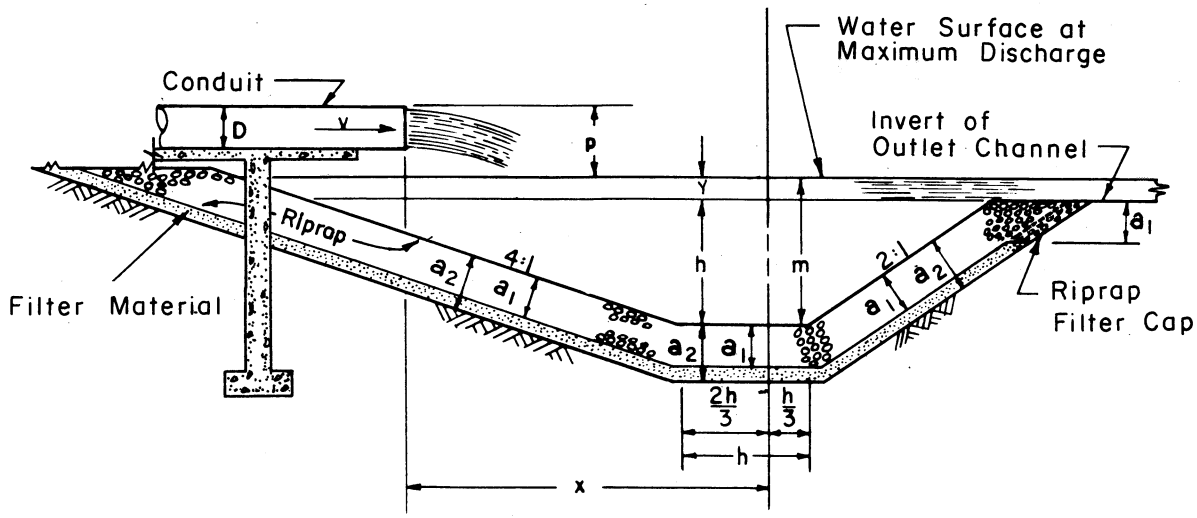

Stilling Basin - Definition Sketch

NOMENCLATURE

a ≡ thickness of riprap or total thickness of riprap and filter material, ft

a_1 ≡ thickness of riprap, ft

a_2 ≡ total thickness of riprap and filter material, ft

d ≡ size of riprap of which 50 percent by weight is smaller, ft

D ≡ inside diameter of conduit, ft

h ≡ depth of stilling basin below invert of outlet channel, ft

m ≡ depth of water in the stilling basin at the maximum conduit discharge, ft

p ≡ vertical distance from the inside crown of the conduit to the water surface in the stilling basin at the maximum conduit discharge, ft

v ≡ mean velocity in the conduit for full pipe flow at maximum discharge, ft/sec

V_a ≡ volume between a horizontal plane at the invert of the outlet channel and a surface at a thickness = a below the exposed riprap surface, cu yds

$\forall_{a_1}$ ≡ volume of riprap below a horizontal plane at the invert of the outlet channel exclusive of the volume in the Riprap Filter Cap, cu yds
$= V_{a=a_1} - V_{a=o}$

$\forall_{a_2}$ ≡ volume of filter material below a horizontal plane at the invert of the outlet channel including the volume in the Riprap Filter Cap, cu yds
$= V_{a=a_2} - V_{a=a_1}$

$\forall_{rfc}$ ≡ volume in the Riprap Filter Cap below a horizontal plane at the invert of the outlet channel, cu yds

x ≡ horizontal distance from the outlet end of the conduit to the center of the stilling basin, ft

EQUATIONS

For determining the depth of the stilling basin,

$$\frac{h}{D^{1/3}} = \left[0.148\,\frac{Q}{D\,d^{1/2}} - 1.82(d)\right]^{2/3} \quad \text{(See sheet 2)}$$

For determining the position of the stilling basin, assuming the conduit is horizontal at the outlet,

$$\frac{x}{\sqrt{p}} = \sqrt{\frac{v^2}{2g}}\left[\sqrt{1 + \frac{m}{p}} + 1 + \frac{m}{2p}\right] \quad \text{(See sheet 3)}$$

For determining the volumes in the stilling basin,

$$V_a = 2\pi(1.167h + 1.06a)^3 - 0.029(h + 0.36a)^3$$

REFERENCE

SCS Design Note No. 6

FIGURE F-4

CANTILEVER OUTLET PLUNGE POOL

EWP Unit Portland, Oregon

ITEM \ CONDUIT SIZE	BENT DIMENSIONS										
	12"	15"	18"	21"	24"	30"	36"	42"	48"	54"	60"
1	3'-0"	3'-0"	3'-0"	3'-6"	3'-6"	4'-6"	5'-0"				
2	2'-6"	2'-9"	3'-0"	3'-3"	3'-6"	4'-1"	4'-8"				
3	1'-0"	1'-0"	1'-3"	1'-6"	1'-6"	1'-6"	2'-0"				
4								4'-0"	4'-0"	4'-6"	4'-6"
5								7'-3"	8'-6"	9'-0"	11'-0"
6								1'-0"	1'-0"	1'-0"	1'-2"
7								1'-0"	1'-4"	1'-3½"	2'-0"
8								3'-3"	3'-10"	4'-5"	4'-8"
VOL. CONC. CY.	0.76	0.77	0.77	0.95	0.96	1.29	1.57	1.90	2.10	2.35	2.81
REIN. STEEL	114#	116#	116#	142#	143#	188#	205#	207#	331#	355#	438#
STD. DWG. NO.					ES 105			ES 106			

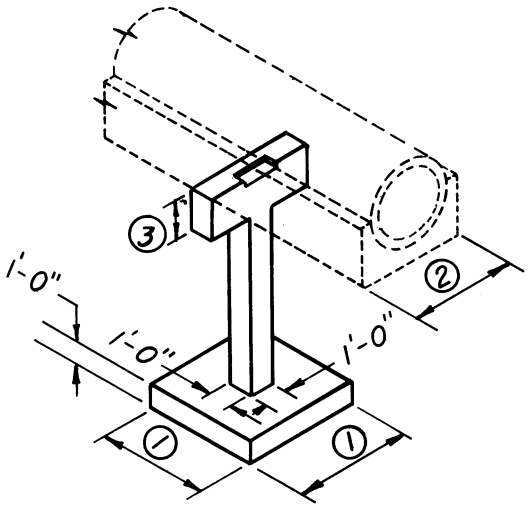

Note:
For conduit size 12" to 36"

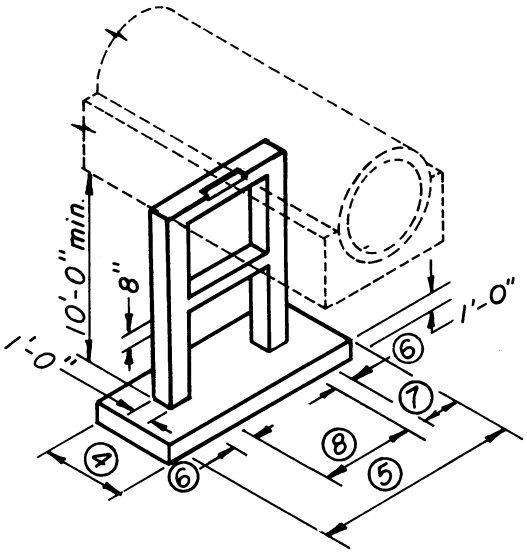

Note:
For conduit size 42" to 60"

FIGURE F-5
CANTILEVER BENT SELECTION CHART
EWP Unit Portland, Oregon

PIPE DIA.	W	R	X	MARK	SIZE	SPACING	d	e	f	g	QUAN.	LENGTH	TYPE	A	G	B	C	TOTAL FT.
24"	3-6	1-6	3-6	F1	4	1-0	0-3				4	3-0	St.					12-0
				F2	4	1-0		0-3			4	3-0	St.					12-0
				F3	4	1-0			0-3		4	3-0	St.					12-0
				F4	4	1-0				0-3	4	3-0	St.					12-0
				F5	6						2	3-0	2	2-0		1-0		6-0
				C6	6						4	9-10	St.					39-4
				C7	3						15	3-2	T1	0-4		0-7½	0-7½	47-6
				T8	4						2	4-5	2	0-9	0-9	2-11		8-10
				T9	6						2	5-1	2	1-0	1-0	3-1		10-2
30"	4-6	1-6	4-1	F1	5	1-0	0-3				5	4-0	St.					20-0
				F2	5	1-0		0-3			5	4-0	St.					20-0
				F3	4	1-0			0-3		5	4-0	St.					20-0
				F4	4	1-0				0-3	5	4-0	St.					20-0
				F5	6						2	3-0	2	2-0		1-0		6-0
				C6	6						4	9-10	St.					39-4
				C7	3						15	3-2	T1	0-4		0-7½	0-7½	47-6
				T8	4						2	5-0	2	0-9	0-9	3-6		10-0
				T9	7						2	5-8	2	1-0	1-0	3-8		11-4
36"	5-0	2-0	4-8	F1	5	1-0	0-6				5	4-6	St.					22-6
				F2	5	1-0		0-6			5	4-6	St.					22-6
				F3	4	1-0			0-6		5	4-6	St.					22-6
				F4	4	1-0				0-6	5	4-6	St.					22-6
				F5	6						2	3-0	2	2-0		1-0		6-0
				C6	6						4	9-10	St.					39-4
				C7	3						15	3-2	T1	0-4		0-7½	0-7½	47-6
				T8	4						2	6-7	2	1-3	1-3	4-1		13-2
				T9	7						2	7-3	2	1-6	1-6	4-3		14-6

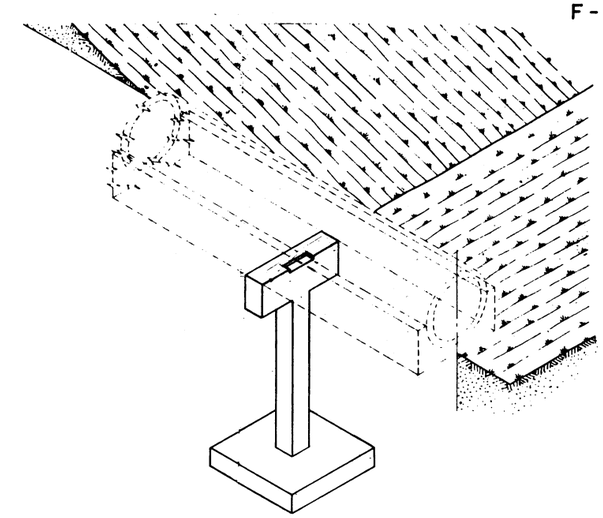

ISOMETRIC VIEW

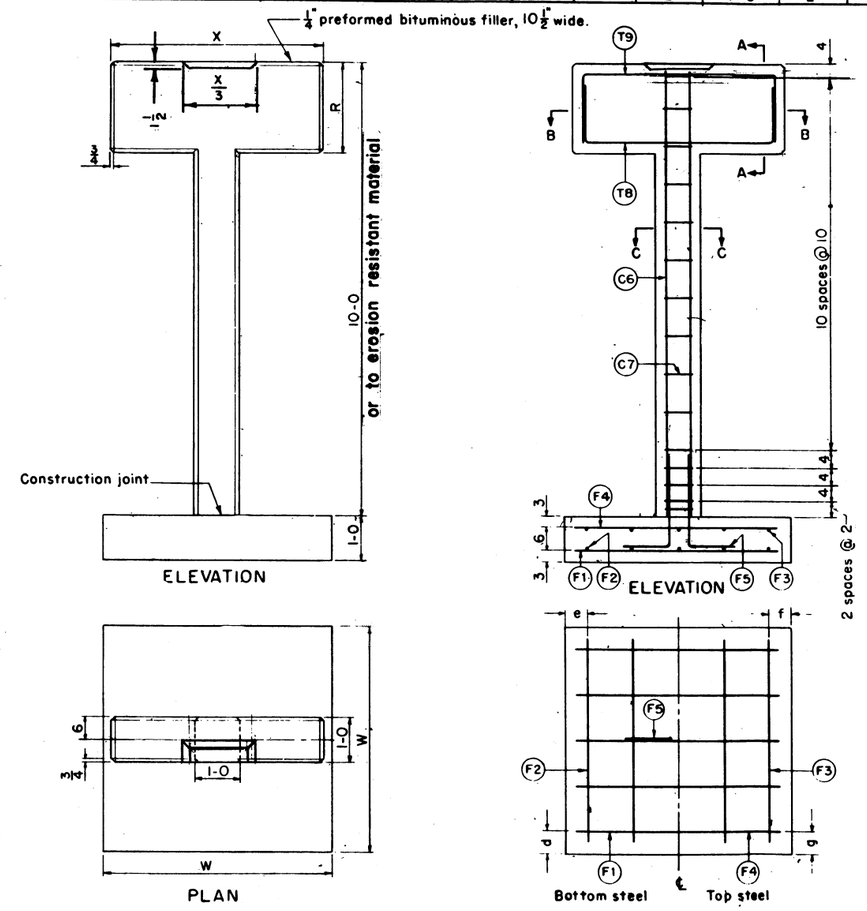

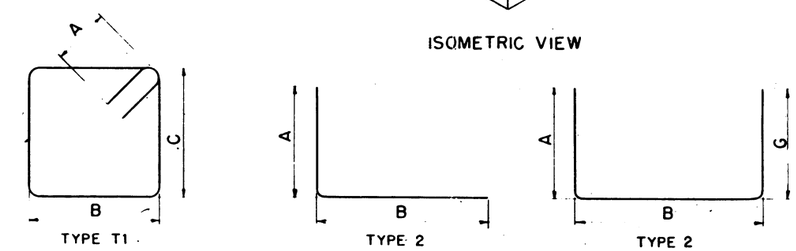

The bar schedule is listed in the approximate order of placement. Bars F1 through F5 are contained in the first pour. All reinforcing steel is round. St. means straight.

BAR TYPE DETAILS

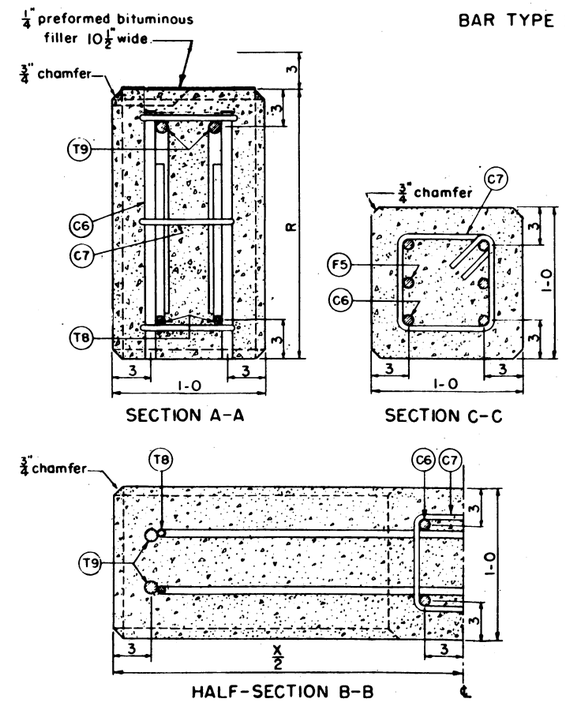

QUANTITIES

PIPE DIAMETER	REINFORCED CONCRETE	REINFORCING STEEL	PREFORMED BITUMINOUS FILLER
24 in.	0.96 cu. yds.	143.03 lbs.	3.0 sq. ft.
30 in.	1.29 cu. yds.	188.08 lbs.	3.5 sq. ft.
36 in.	1.57 cu. yds.	205.27 lbs.	4.0 sq. ft.

NOTES

1. Class "B" concrete, $f'_c = 3{,}000$ psi. $f_s = 20{,}000$ psi
2. All exposed edges will have ¾ inch chamfer
3. All reference to pipe diameter is the inside diameter of the outlet pipe.
4. The bar mark numbers indicate the respective bar locations.
5. Quantities include column and footing
6. All steel placement dimensions are to center of bars.

REFERENCE: ES 105

FIGURE F-6

CANTILEVER OUTLET BENT

EWP Unit Portland, Oregon

PIPE DIA.	W	L	M	N	P	X	MARK	SIZE	SPACING	d	e	f	g	QUAN.	LENGTH	TYPE	A	B	C	TOTAL FT.
42"	4-0	7-3	1-0	1-0	3-3	5-3	F1	4	1-2	0-3	0-3¼	0-3¼	0-4	4	6-9	St.				27-0
							F2	4	0-11½					8	3-6	St.				28-0
							F3	4	0-11½					8	3-6	St.				28-0
							F4	4	0-10					5	6-9	St.				33-9
							F5	6						4	2-6	2	1-6	1-0		10-0
							C6	6						8	9-10	St.				78-8
							C7	3						26	3-2	T1	0-4	0-7½	0-7½	82-4
							C8	4	0-6					8	4-6	2	1-0	3-6		36-0
							C9	4	0-6					2	4-9	St.				9-6
48"	4-0	8-6	1-4	1-0	3-10	5-10	F1	4	0-10	0-4	0-3	0-3	0-4	5	8-0	St.				40-0
							F2	4	1-0					9	3-6	St.				31-6
							F3	4	1-0					9	3-6	St.				31-6
							F4	4	0-10					5	8-0	St.				40-0
							F5	6						4	2-6	2	1-6	1-0		10-0
							C6	7						8	9-10	St.				78-8
							C7	3						26	3-4	T1	0-4	0-8	0-8	86-8
							C8	4	0-6					8	5-0	2	1-0	4-0		40-0
							C9	4	0-6					2	5-6	St.				11-0
54"	4-6	9-0	1-3½	1-0	4-5	6-5	F1	4	1-0	0-3	0-4½	0-6	0-3	5	8-6	St.				42-6
							F2	4	0-11					10	4-0	St.				40-0
							F3	4	1-0					9	4-0	St.				36-0
							F4	4	0-8					7	8-6	St.				59-6
							F5	6						4	2-6	2	1-6	1-0		10-0
							C6	7						8	9-10	St.				78-8
							C7	3	1-0					26	3-4	T1	0-4	0-8	0-8	86-8
							C8	4	0-6					8	5-3	2	1-0	4-3		42-0
							C9	4	0-6					2	6-0	St.				12-0
60"	4-6	11-0	2-0	1-2	4-8	7-0	F1	4	0-8	0-3	0-3	0-6	0-3	7	10-6	St.				73-6
							F2	4	0-10½					13	4-0	St.				52-0
							F3	4	1-0					11	4-0	St.				44-0
							F4	4	1-0					5	10-6	St.				52-6
							F5	6						4	2-6	2	1-6	1-0		10-0
							C6	8						8	9-10	St.				78-8
							C7	3						26	3-8	T1	0-4	0-10	0-8	95-4
							C8	4	0-6					8	5-6	2	1-0	4-6		44-0
							C9	4	0-6					2	6-8	St.				13-4

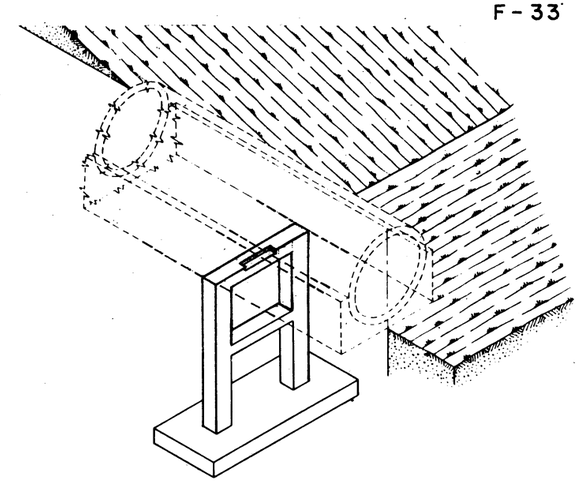

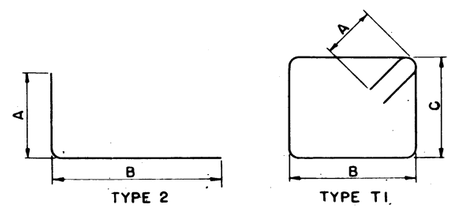

BAR TYPE DETAILS

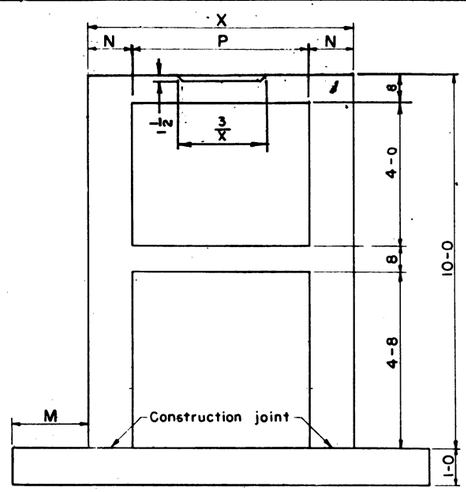

ELEVATION

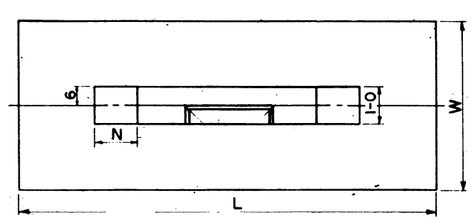

PLAN

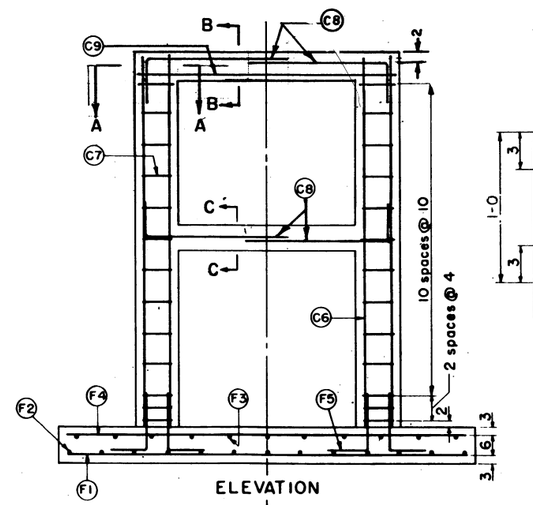

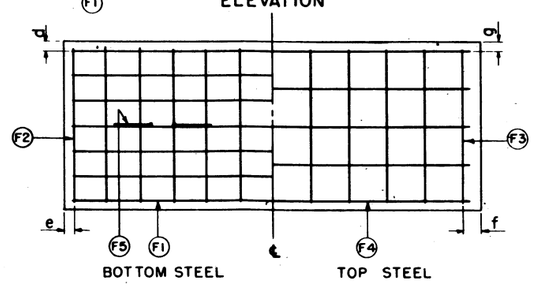

PLAN-FOOTING

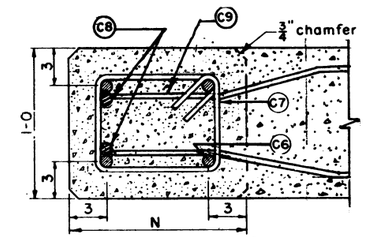

SECTION A-A

The bar schedule is listed in the approximate order of placement Bars F1 through F5 are contained in the first pour. All reinforcing steel is round. St. is an abbreviation for straight.

QUANTITIES

PIPE DIAMETER	REINF. CONCRETE	REINF. STEEL
42 in.	1.98 cu. yds.	279.24 lbs.
48 in.	2.17 cu. yds.	345.72 lbs.
54 in.	2.46 cu. yds.	371.16 lbs.
60 in.	2.93 cu. yds.	456.56 lbs.

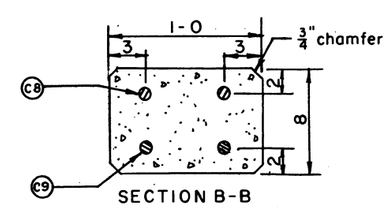

SECTION B-B

NOTES

1. Class "B" concrete. f'_c = 3,000 psi. f_s = 20,000 psi.
2. All exposed edges will have ¾ inch chamfer
3. All reference to pipe diameter is the inside diameter of the outlet pipe.
4. The bar mark numbers indicate the respective bar locations.
5. Quantities include columns, tie beam, and footing
6. All steel placement dimensions are to center of bars.

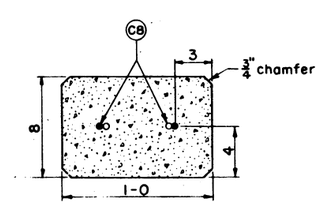

SECTION C-C

REFERENCE:
ES 106

FIGURE F-7
CANTILEVER OUTLET BENT
EWP Unit Portland, Oregon

PIPE DIA.	X	H	MARK	SIZE	SPACING	QUAN.	LENGTH	TYPE	B	C	D	TOTAL FT.
24"	3-6	1-9	B1	4	1-0	24	5-11	S10	1-5	3-1½	1-5	142-0
			B2	4	1-0	4	23-6	St.				94-0
			B3	4	1-0	4	5-0	St.				20-0
			B4	9		2	23-6	St.				47-0
30"	4-1	2-0½	B1	4	1-0	24	7-1	S10	1-8½	3-8½	1-8½	170-0
			B2	4	0-11	5	23-6	St.				117-6
			B3	4	0-11	5	5-0	St.				25-0
			B4	7		2	23-6	St.				47-0
			B5	7		2	23-6	St.				47-0
36"	4-8	2-4	B1	4	1-0	24	8-3	S10	2-0	4-3½	2-0	198-0
			B2	4	0-10	6	23-6	St.				141-0
			B3	4	0-10	6	5-0	St.				30-0
			B4	8		2	23-6	St.				47-0
			B5	8		2	23-6	St.				47-0
42"	5-3	2-7½	B1	4	1-0	24	9-5	S10	2-3½	4-10½	2-3½	226-0
			B2	4	0-11½	6	23-6	St.				141-0
			B3	4	0-11½	6	5-0	St.				30-0
			B4	8		2	23-6	St.				47-0
			B5	8		2	23-6	St.				47-0
48"	5-10	2-11	B1	4	1-0	24	10-7	S10	2-7	5-5½	2-7	254-0
			B2	4	0-10½	7	23-6	St.				164-6
			B3	4	0-10½	7	5-0	St.				35-0
			B4	8		2	23-6	St.				47-0
			B5	8		2	23-6	St.				47-0
54"	6-5	3-2½	B1	4	1-0	24	11-9	S10	2-10½	6-0½	2-10½	282-0
			B2	4	0-11½	7	23-6	St.				164-6
			B3	4	0-11½	7	5-0	St.				35-0
			B4	9		2	23-6	St.				47-0
			B5	9		2	23-6	St.				47-0
60"	7-0	3-6	B1	4	0-9½	30	12-11	S10	3-2	6-7½	3-2	387-6
			B2	4	0-11	8	23-6	St.				188-0
			B3	4	0-11	8	5-0	St.				40-0
			B4	9		2	23-6	St.				47-0
			B5	9		2	23-6	St.				47-0

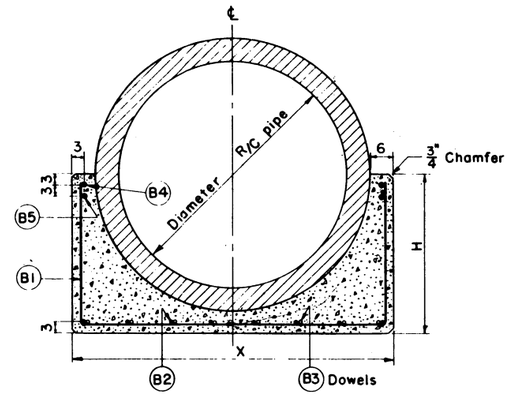

SECTION A-A

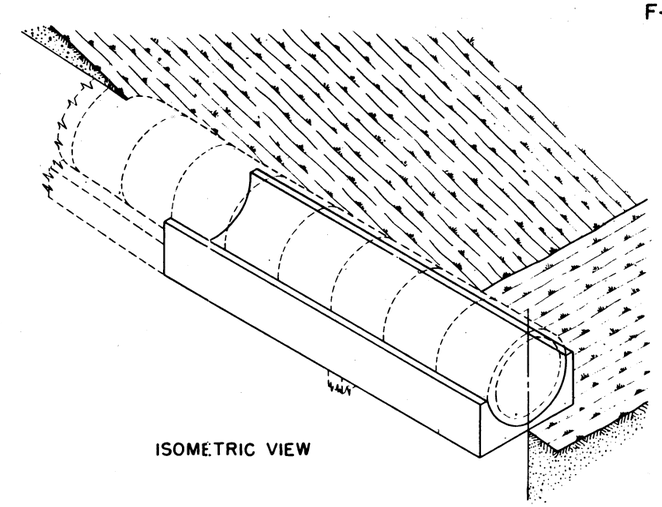

ISOMETRIC VIEW

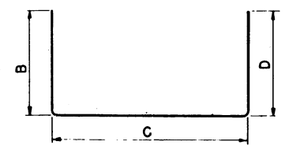

TYPE S10

BAR TYPE DETAIL

The bar schedule is listed in the approximate order of placement. All reinforcing steel is round. St. is an abbreviation for straight

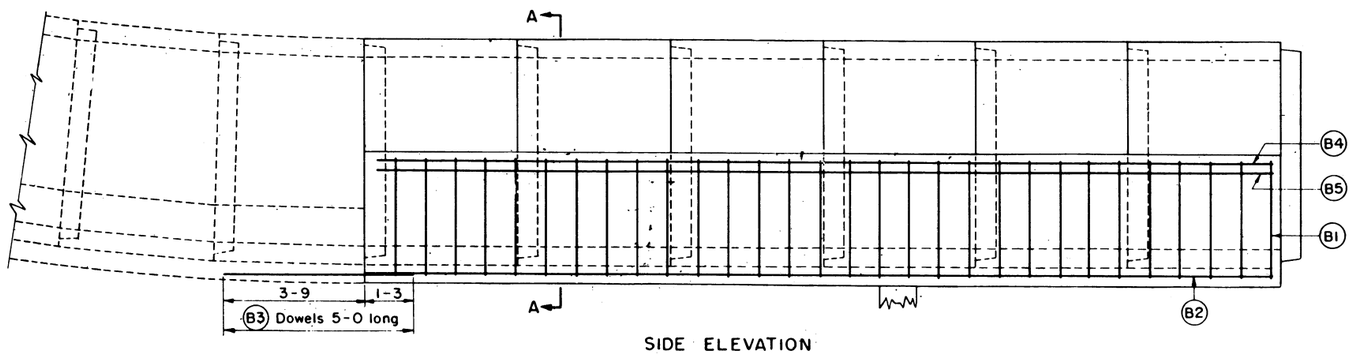

SIDE ELEVATION

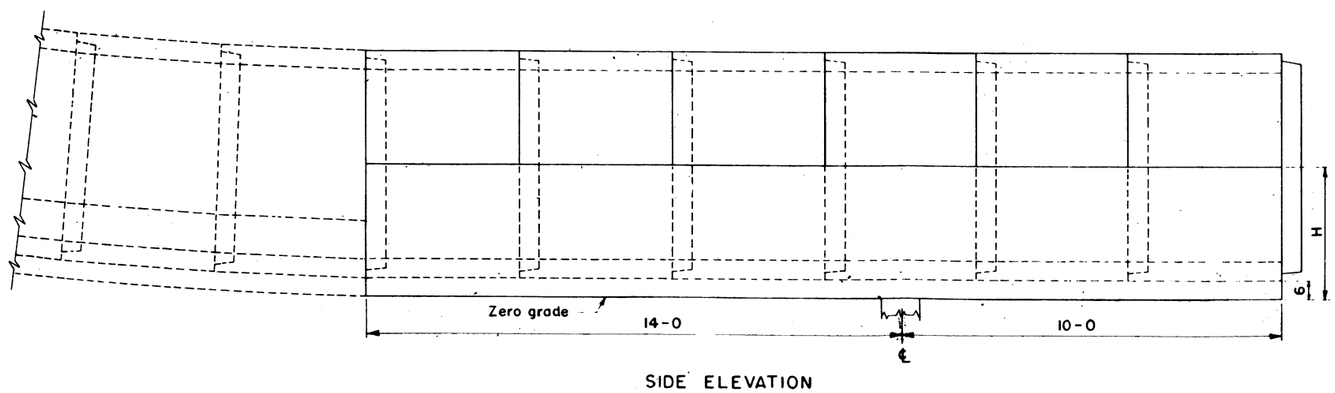

SIDE ELEVATION

QUANTITIES

PIPE DIAMETER	REINFORCED CONCRETE	REINFORCING STEEL
24 in.	3.26 cu. yds.	330.81 lbs.
30 in.	4.09 cu. yds.	400.89 lbs.
36 in.	4.99 cu. yds.	497.47 lbs.
42 in.	5.94 cu. yds.	516.18 lbs.
48 in.	6.97 cu. yds.	553.92 lbs.
54 in.	8.06 cu. yds.	641.24 lbs.
60 in.	9.21 cu. yds.	730.75 lbs.

NOTES

1. Class "B" concrete, $f'_c = 3{,}000$ psi $f_s = 20{,}000$ psi
2. All exposed edges will have ¾ inch chamfer
3. All reference to pipe diameter is the inside diameter of the the outlet pipe.
4. The outlet pipe will be standard strengh R/C pipe with an an over-all length of 24 feet.
5. Quantities include the beam only
6. The bar mark numbers are the respective bar locations
7. All steel placement dimensions are to center of bars

REFERENCE:
ES 107

FIGURE F-8

CANTILEVER OUTLET DETAIL

EWP Unit Portland, Oregon

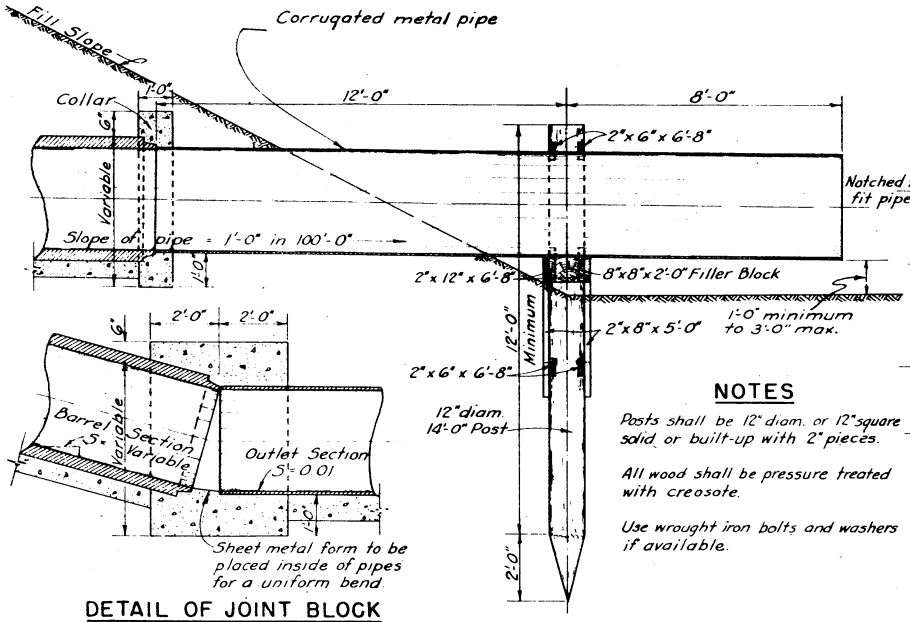

DETAIL OF JOINT BLOCK

FOR TRANSITION BETWEEN OUTLET AND BARREL

Note Joint block shall be used unless the conduit and outlet pipe are on the same slope.

SECTION THRU ℄ OF PIPE

NOTES

Posts shall be 12" diam. or 12" square solid or built-up with 2" pieces.

All wood shall be pressure treated with creosote.

Use wrought iron bolts and washers if available.

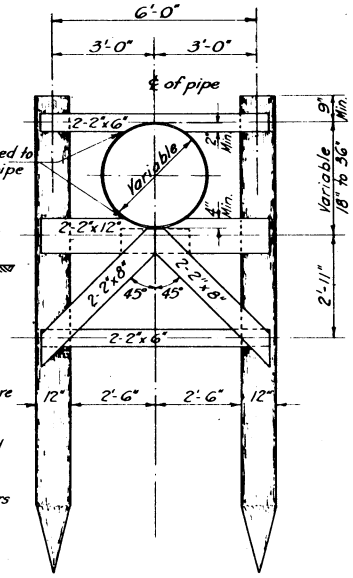

ELEVATION OF BENT

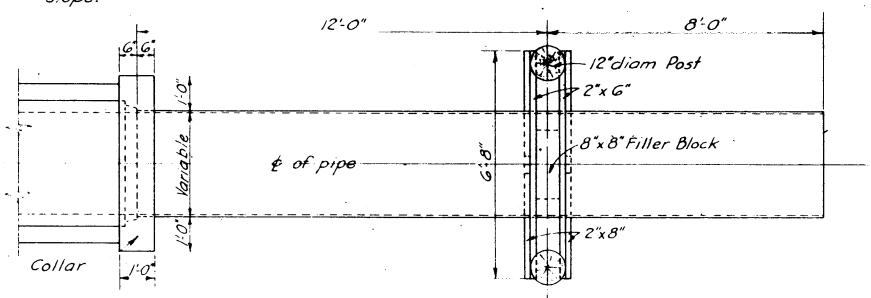

PLAN

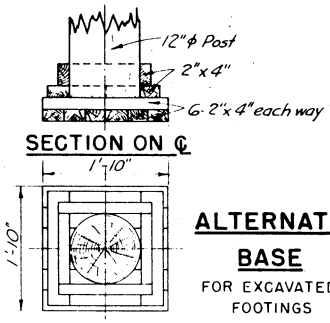

SECTION ON ℄

PLAN

ALTERNATE BASE

FOR EXCAVATED FOOTINGS

SCALE - 3/8" = 1'-0"

SCALE - 3/16" = 1'-0" UNLESS SHOWN

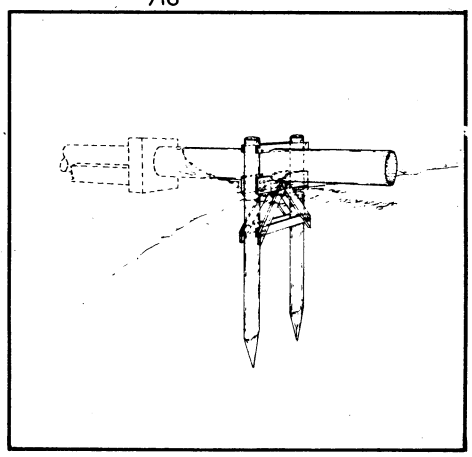

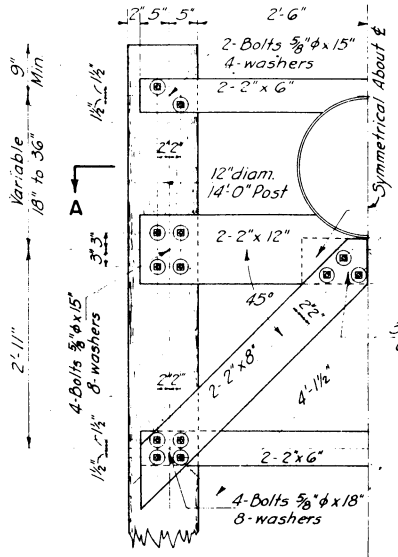

HALF ELEVATION

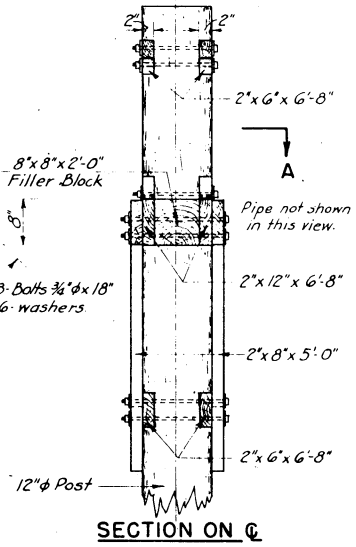

SECTION ON ℄

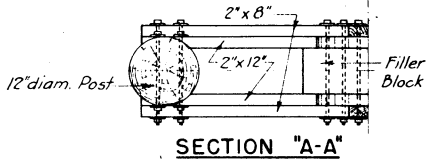

SECTION "A-A"

DETAILS OF BENT

SCALE - 3/8" = 1'-0"

REFERENCE : 3-L-12524

REVISED 9-22-53

FIGURE F-9

CANTILEVER OUTLET TIMBER BENT

EWP Unit Portland, Oregon

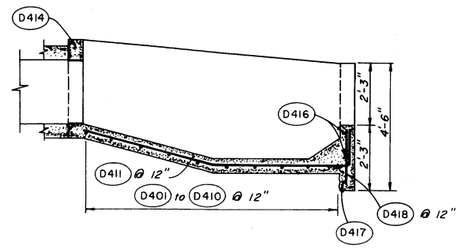

SECTIONAL ELEVATION

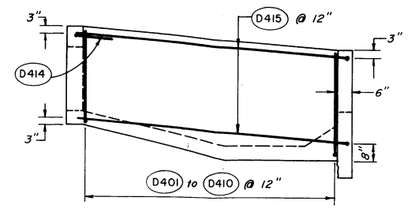

SIDEWALL ELEVATION

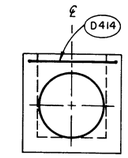

HEADWALL ELEVATION

STEEL SCHEDULE

Location	Size	Mark	Quan.	Length	Type	A	B	G	Total Length
P.W.D. BASIN									
Slab	4	D401	2	5'-3"	2	2'-3"	3'-0"		10'-6"
"	4	D402	2	5'-6"	2	2'-3"	3'-3"		11'-0"
"	4	D403	2	6'-0"	2	2'-6"	3'-6"		12'-0"
"	4	D404	2	6'-6"	2	3'-0"	3'-6"		13'-0"
"	4	D405	2	7'-0"	2	3'-3"	3'-9"		14'-0"
"	4	D406	2	7'-3"	2	3'-6"	3'-9"		14'-6"
"	4	D407	2	7'-6"	2	3'-9"	3'-9"		15'-0"
"	4	D408	2	7'-9"	2	4'-0"	3'-9"		15'-6"
"	4	D409	2	7'-9"	2	4'-3"	3'-6"		15'-6"
"	4	D410	2	8'-3"	2	4'-9"	3'-6"		16'-6"
"	4	D411	4	10'-6"	SPA	4'-6"	4'-9"	1'-3"	42'-0"
"	4	D412	2	7'-3"	SPA	1'-3"	4'-9"	1'-3"	14'-6"
"	4	D413	2	4'-0"	2	2'-9"	1'-3		8'-0"
Sidewall	4	D414	1	5'-3"	SPB	1'-3"	2'-9"	1'-3"	5'-3"
"	4	D415	8	14'-0"	SPB	4'0	10'-0"		112'-0"
Cutoff wall	4	D416	2	10'-3"	Str				20'-6"
"	4	D417	1	16'-9"	Str				16'-9"
"	4	D418	8	1'-9"	Str				14'-0"
"	4	D419	10	4'-0"	Str				40'-0"

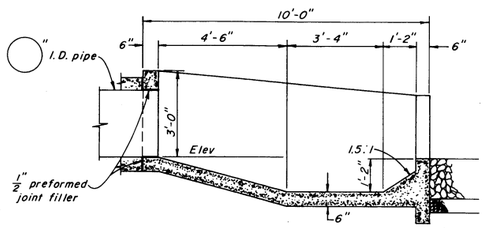

SECTIONAL ELEVATION

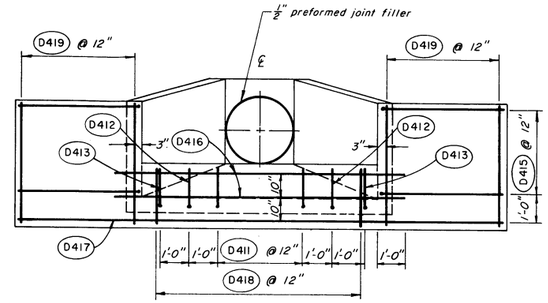

WINGWALL ELEVATION

TABLE OF QUANTITIES				
	I.D. of pipe In.	Type of pipe		
		ASTM 76 & AWWA C 302 Cu Yds	AWWA C 300 & C 301 Cu Yds	Steel & C.M.P. Cu Yds
Concrete	18	3.67	3.67	3.70
	20		3.65	3.68
	21	3.65		3.67
	24	3.63	3.63	3.66
	27	3.61		3.64
Reinf Steel	274 lbs			

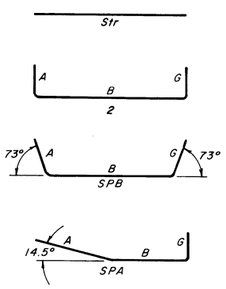

BAR TYPES

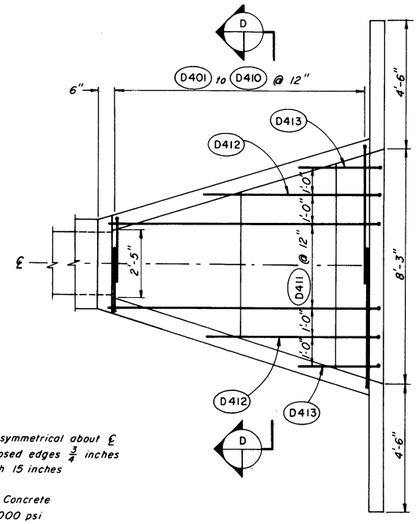

PLAN

Notes:

Structure is symmetrical about ℄
Chamfer exposed edges 3/4 inches
Splice length 15 inches

Class 3000 Concrete
f_s = 20,000 psi
f'_c = 3000 psi
f_c = 1350 psi

Refer to Table J-F1 for refinement in concrete volume

TABLE OF QUANTITIES	
Concrete	cu yd
Reinforcing steel	274 lbs

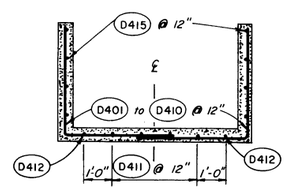

SECTION D

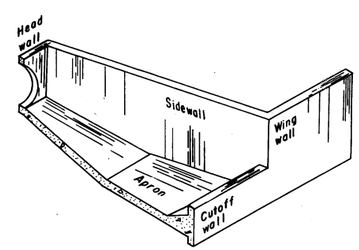

HALF ISOMETRIC VIEW

SCALE 1 0 5 10 IN FEET

P.W.D. BASIN SIZE D
PORTLAND, OREGON E&WP UNIT

FIGURE F-10
P.W.D. BASIN
EWP Unit Portland, Oregon

Desig
Drawn
Traced
Checked
Title
Sheet No of
Drawing No.

7-E-20463-D

CONDITION 1 Rock riprap not required

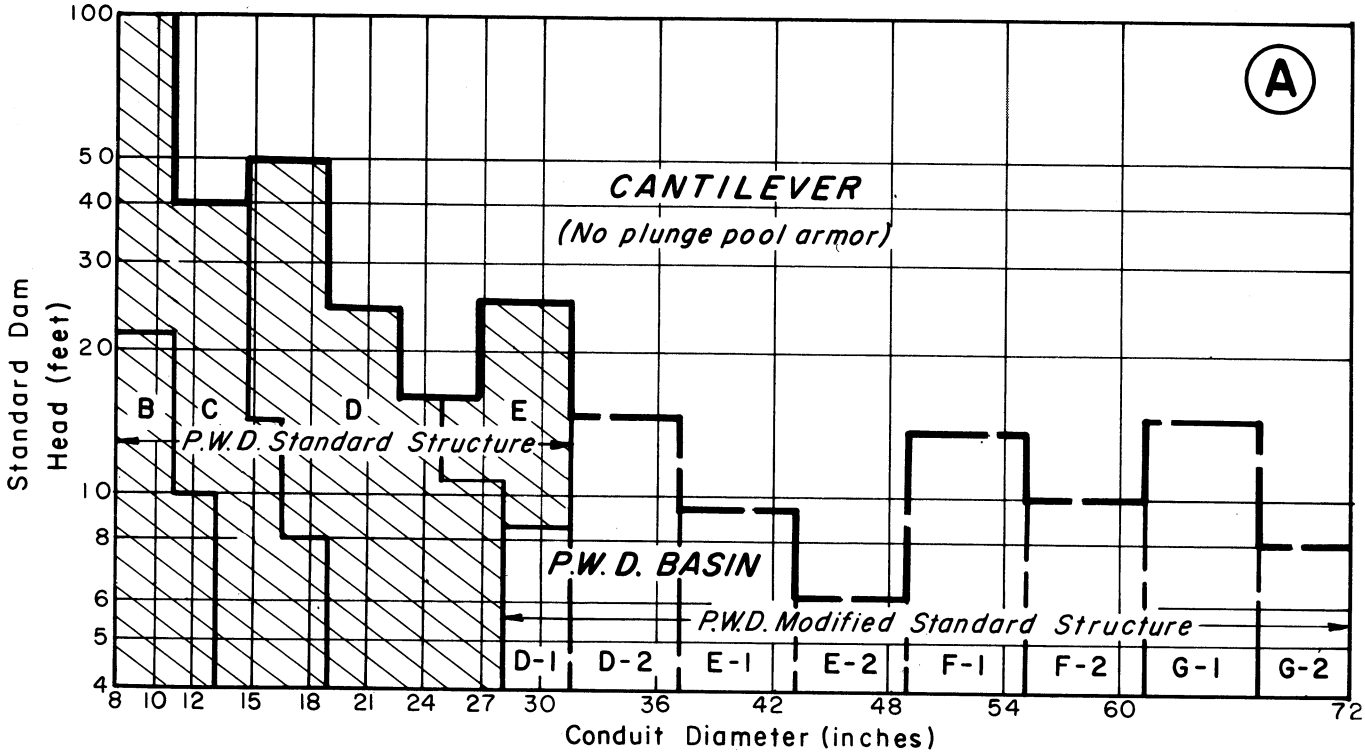

CONDITION 2 Rock riprap required

When unit cost ratio of R/C to rock riprap is less than 13 use Chart B. If the ratio is greater than 13 compare costs of the structure selected from Chart B with that of a cantilever and armored plunge pool.

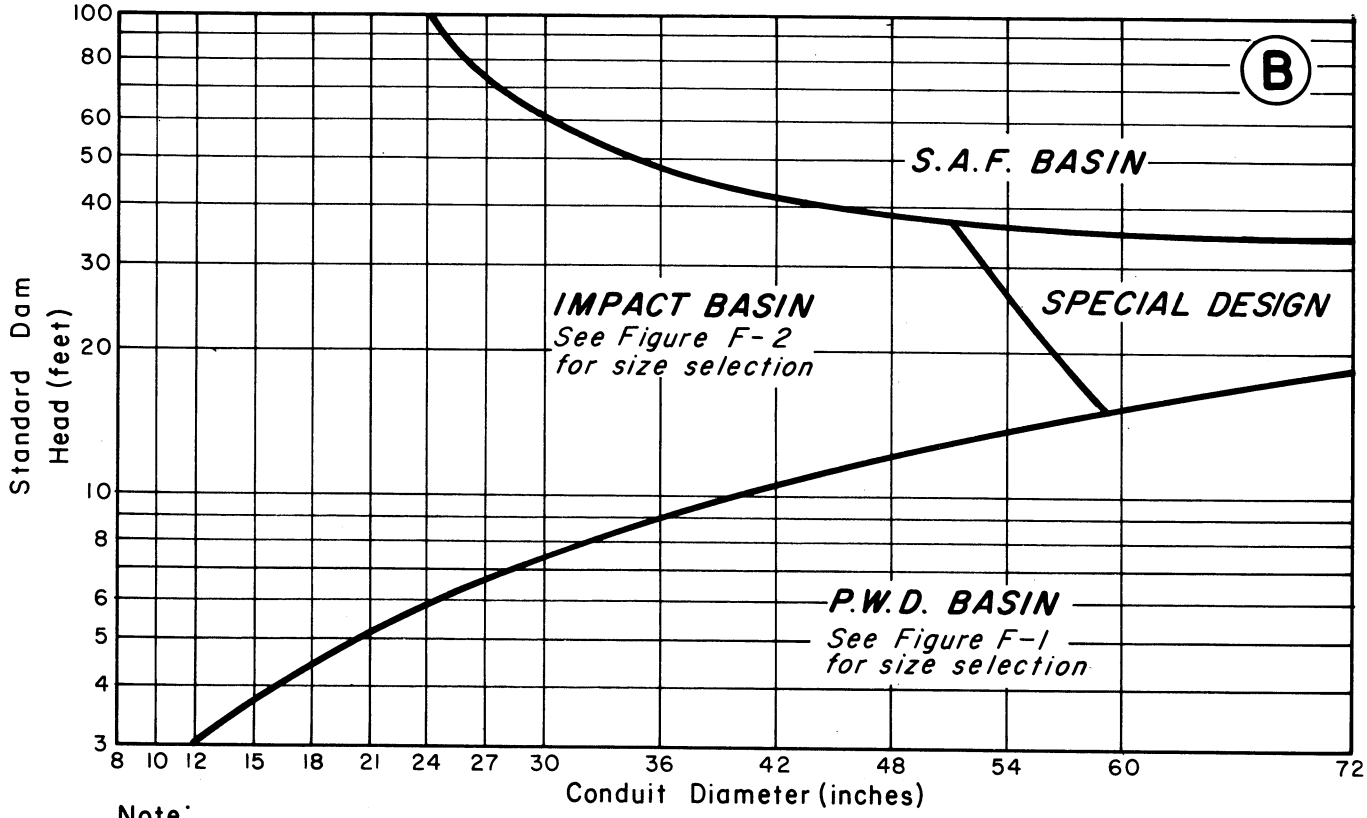

Note:
Charts A and B apply for full conduit flow.

FIGURE F-11
OUTLET STRUCTURE SELECTION CHARTS
EWP Unit Portland, Oregon

SECTION G - MISCELLANEOUS STRUCTURE

Contents

		Page
I.	INTRODUCTION	G-1
II.	WATER LEVEL GAGE	G-1
III.	INTAKE STRUCTURE	G-1
IV.	TIMBER CATWALK	G-1
V.	INLET-OUTLET BOX	G-1

Figures

G-1	Reservoir Water Level Gage	G-3
G-2	Reservoir Water Level Gage	G-4
G-3	Intake Structure With Strainer and Pylon Gate Lift	G-5
G-4	Timber Catwalk, Stringer Size and Cost	G-6
G-5	Overnight Storage Reservoir: Inlet-Outlet Box	G-7
G-6	Overnight Storage Reservoir: Inlet-Outlet Box	G-8

SECTION G - MISCELLANEOUS STRUCTURES

I. INTRODUCTION

A wide variety of miscellaneous structures have been designed for individual site conditions. Several that lend themselves to repeated use are included for consideration by the designer.

II. WATER LEVEL GAGE

Both the treated timber and the steel water level gage, are set flush with the upstream surface of the embankment. Elevation or stage markings should be delayed until the initial embankment settlement has taken place.

III. INTAKE STRUCTURE

The pylon type gate lift (Figure G-3) is not recommended for conditions where icing is severe. Access to the pylon is by boat during most reservoir stage.

IV. TIMBER CATWALK

This installation is not recommended for conditions where icing is severe. Figure G-4 provides a fast approximate cost used for alternate comparison. Although the catwalk width is only 2 feet, the basic data will allow for width increase more desirable for recreational purposes. See Figure H-3 for typical layout detail for the construction drawing. A handrail is recommended and can be added by extending the decking at about 8 foot centers to provide brace support for the handrail posts.

V. INLET-OUTLET BOX

Figures G-5 and G-6 provide both details and proportions for a small reservoir inlet-outlet box. The reservoir is filled by pumping during off peak periods. A combination of pumping and reservoir discharge can be used for peak requirements.

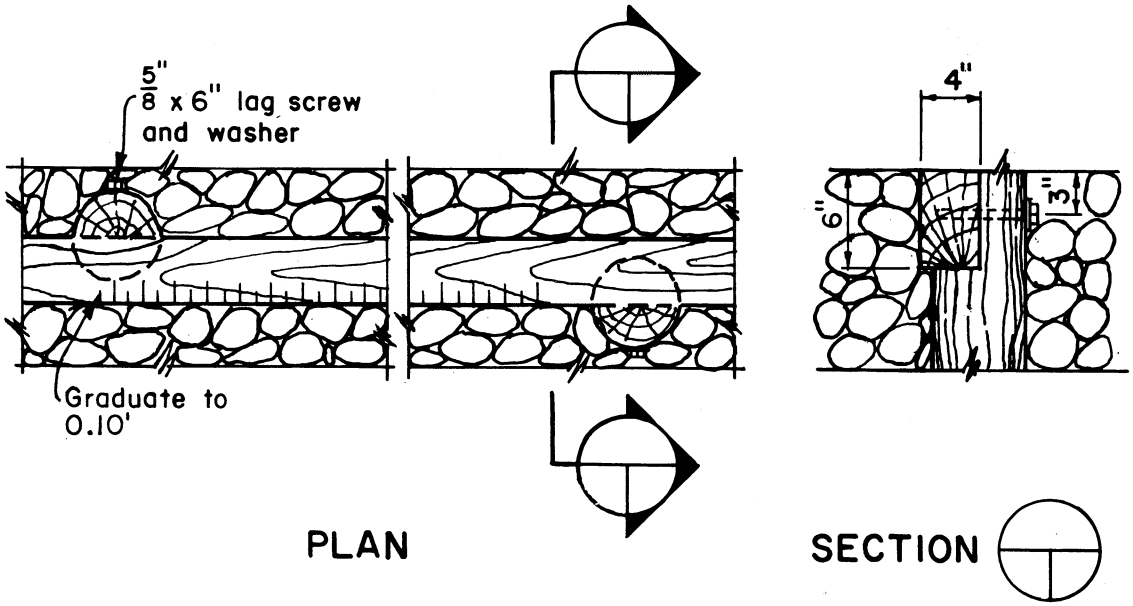

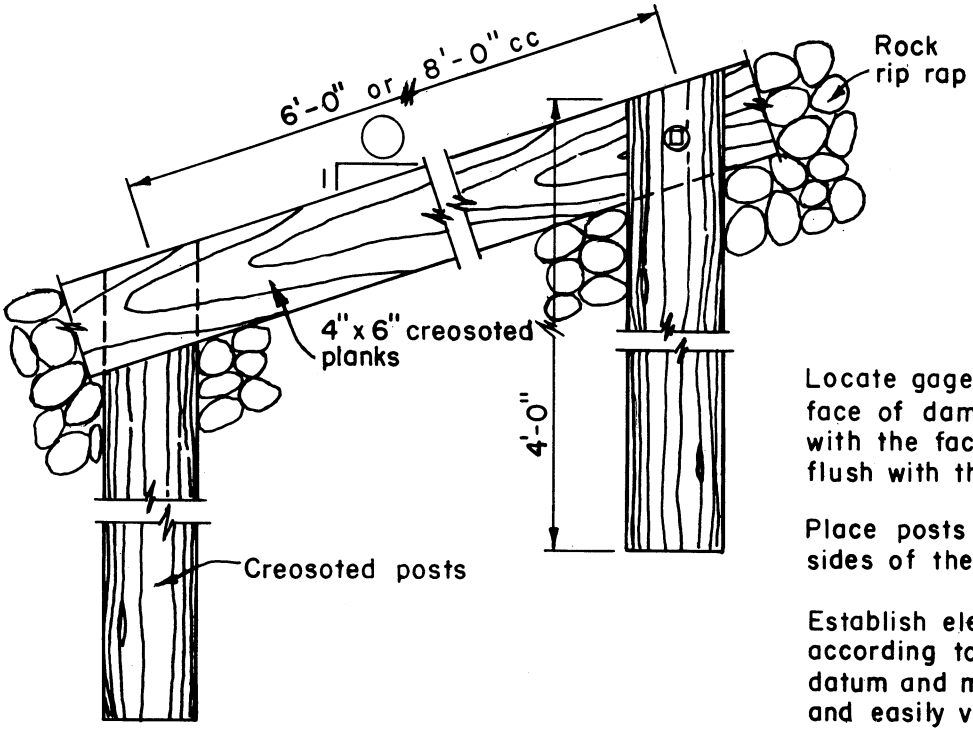

Locate gage on the upstream face of dam, normal to the ℄, with the face of the gage flush with the outer surface.

Place posts on alternate sides of the gage plank.

Establish elevations or stage according to reservoir survey datum and mark with permanent and easily visible materials.

ELEVATION

WATER LEVEL GAGE

FIGURE G-1
RESERVOIR WATER LEVEL GAGE
EWP Unit Portland, Oregon

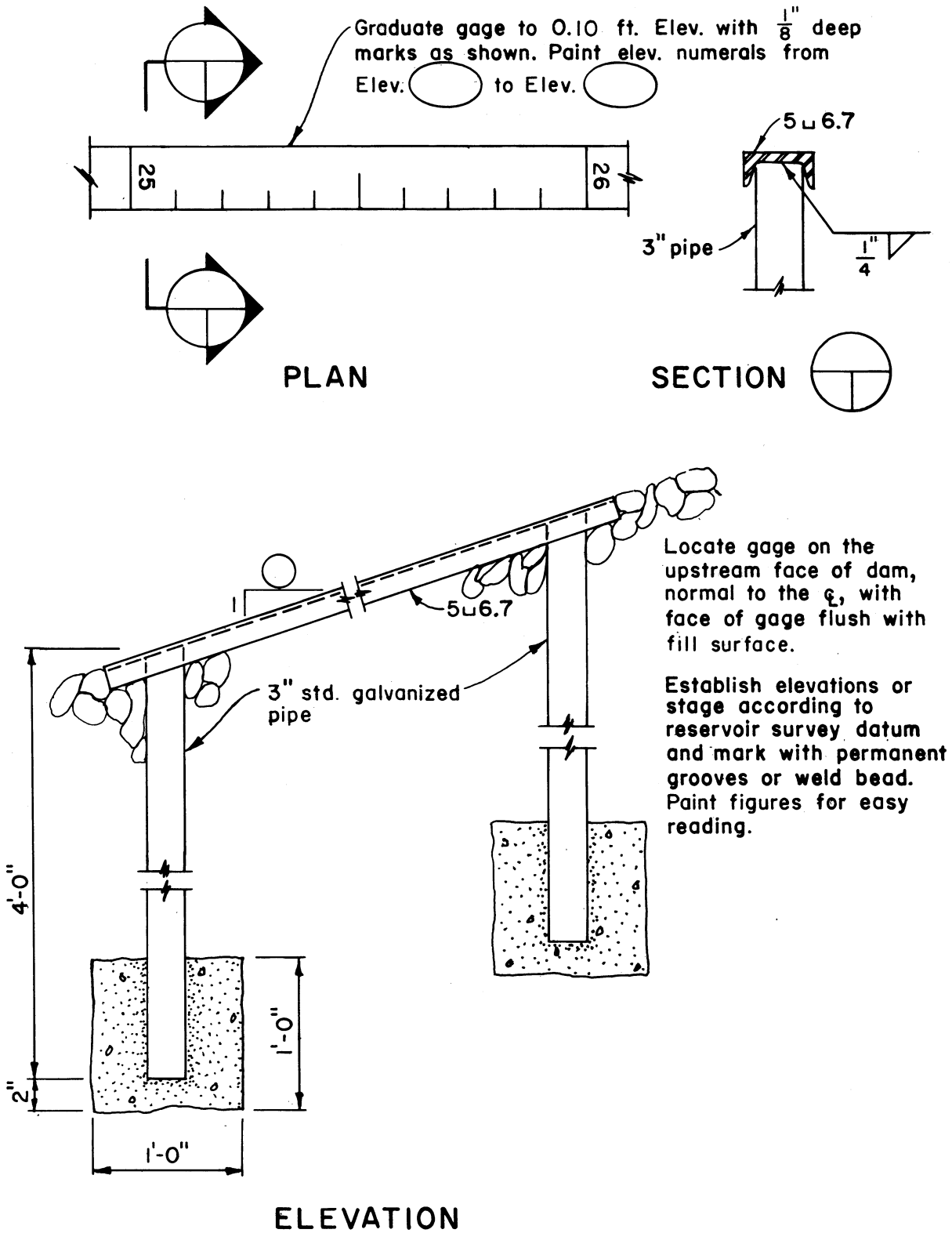

WATER LEVEL GAGE

FIGURE G-2
RESERVOIR WATER LEVEL GAGE
EWP Unit Portland, Oregon

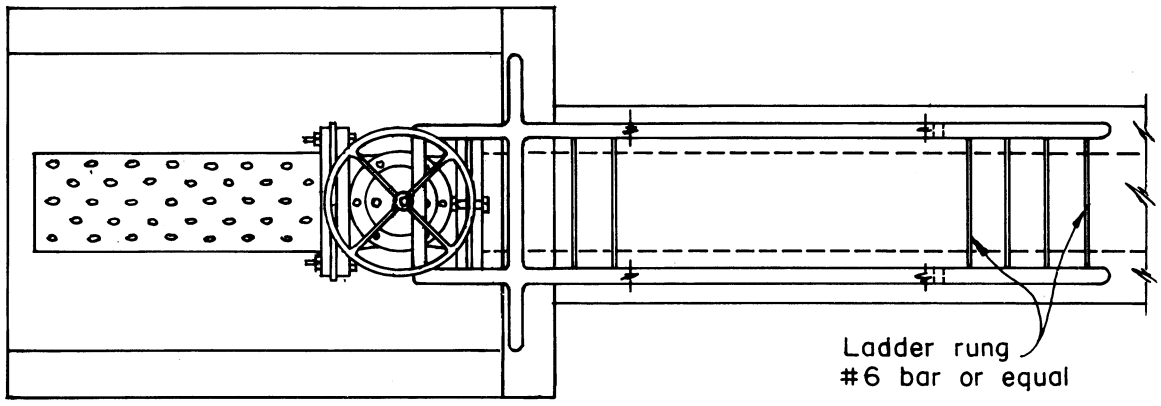

PLAN

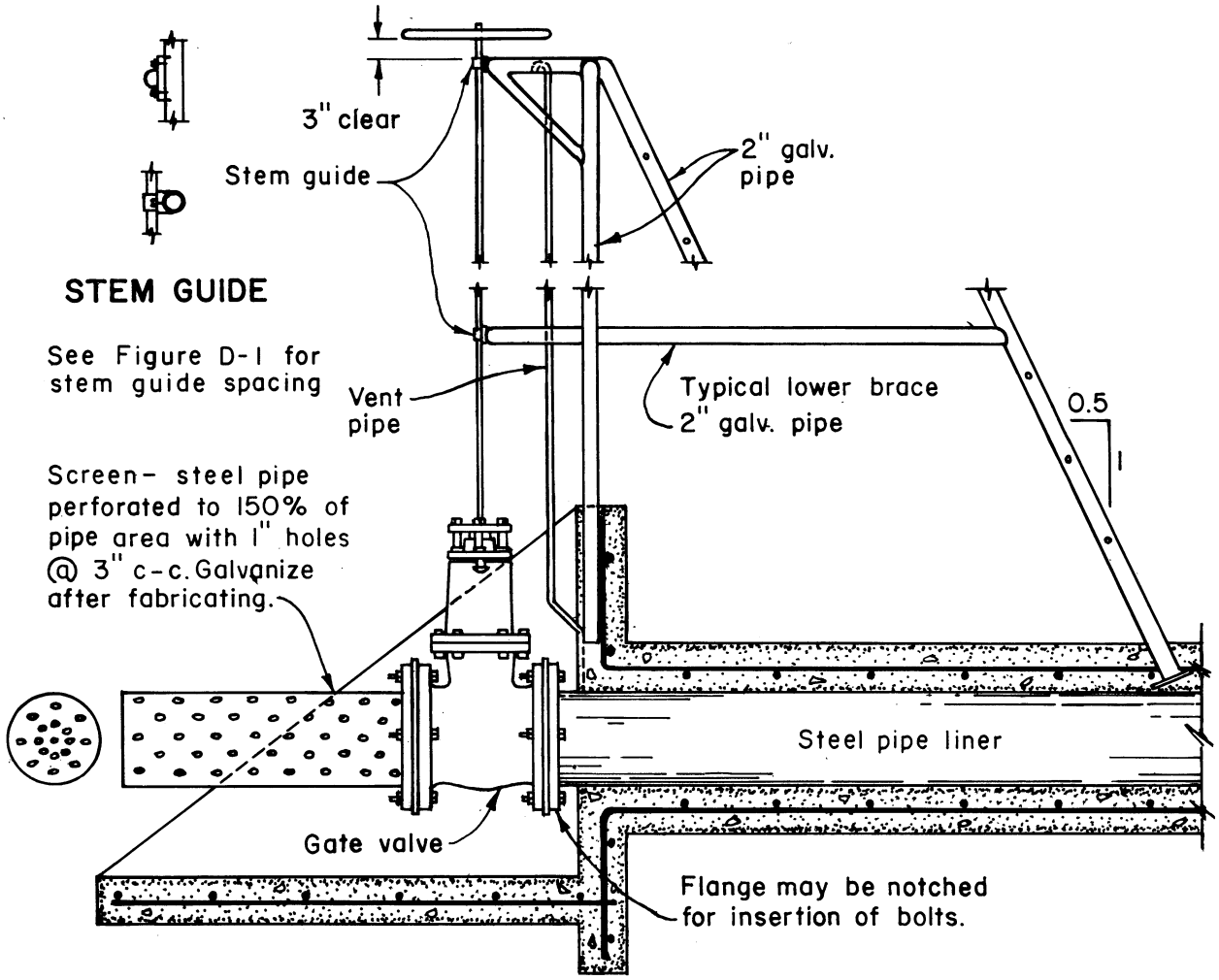

ELEVATION

FIGURE G-3

INLET STRUCTURE
WITH STRAINER AND PYLON GATE LIFT

EWP Unit Portland, Oregon

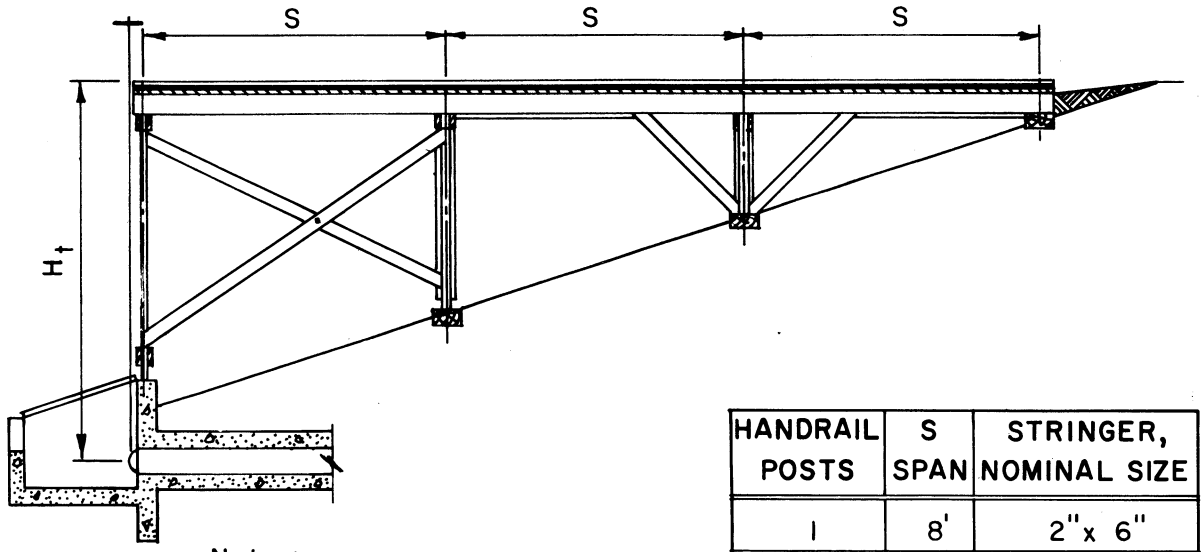

HANDRAIL POSTS	S SPAN	STRINGER, NOMINAL SIZE
1	8'	2" x 6"
2	10	2 x 8
2	12	2 x 10
2	14	2 x 12
2	16	2 x 12
3	18	3 x 12
3	20	3 x 12

Notes:

1. Multiple story bents to be used for heights in excess of 14'-0".
2. Costs do not include mechanical features of the gate system.
3. Allowable working stress, f=1200 p.s.i.
4. Timber quantity includes substructure and deck.

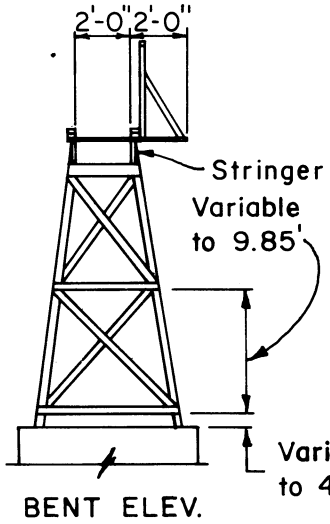

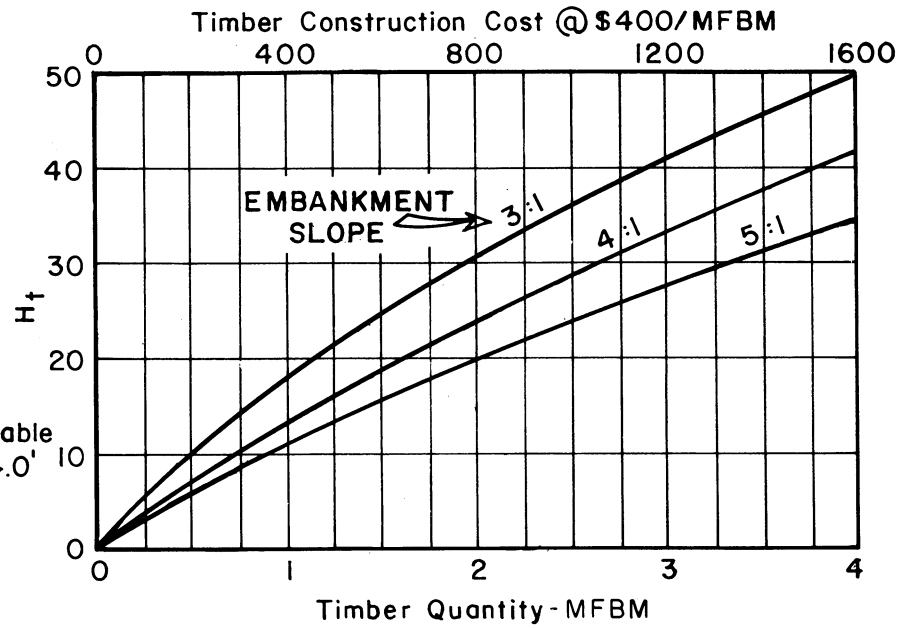

FIGURE G-4

TIMBER CATWALK: STRINGER SIZE, AND COST

EWP Unit Portland, Oregon

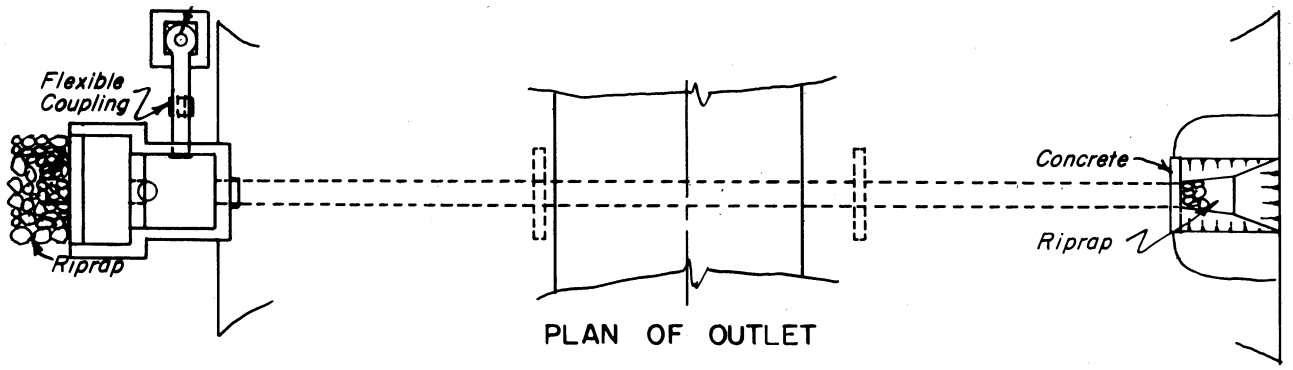

PLAN OF OUTLET

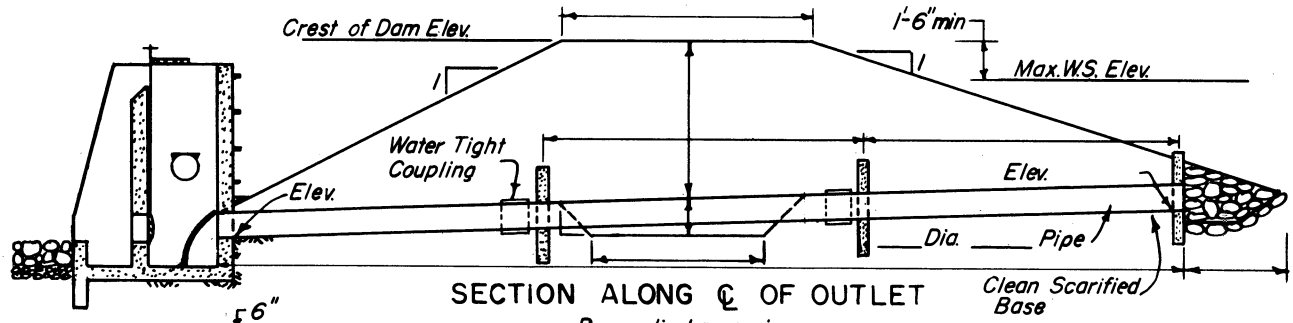

SECTION ALONG ℄ OF OUTLET

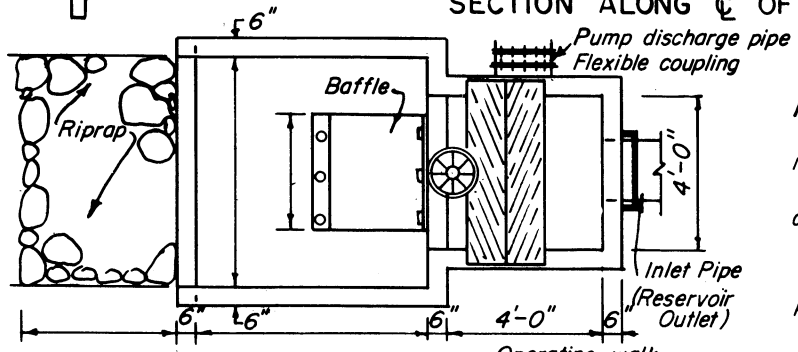

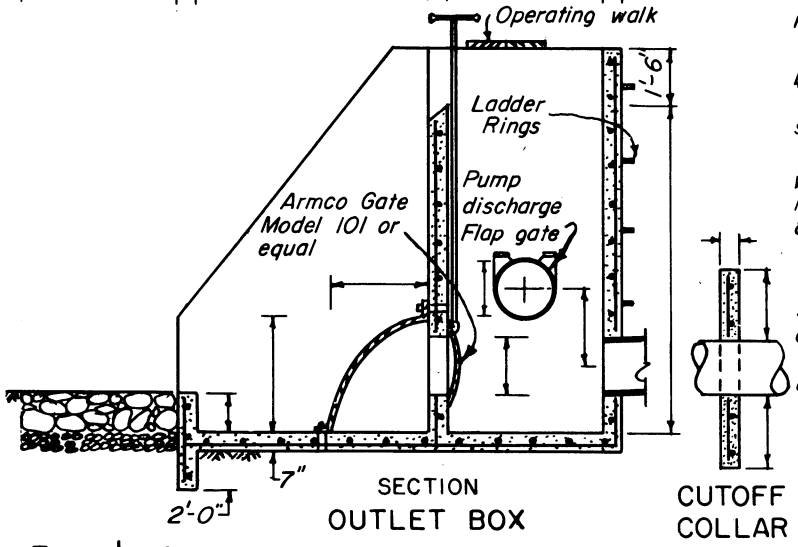

SECTION
OUTLET BOX

CUTOFF COLLAR

NOTE:

Cutoff collars of fabricated steel may be used instead of concrete.

Steel placement, #4@12" center to center bothways.

All splices 30 bar diameters.

Under highly corrosive conditions pipe shall be asphalt dipped.

Adequately protected earth spillway may be substituted for drop box.

Pump may discharge over top of box instead of using flap gate.

Location of inlet and outlets should vary to meet local conditions.

Embankment design shall comply with criteria as set forth in Tech. Memo. Soil Mechanics Series No. 3 & No. 4.

Max. height of embankment 15'-0"

Moderate or high hazard locations shall require a gate on the upstream end of the outlet pipe. See Engr. Memo No. 3 for definitions and for other restricting criteria.

Farmer's Acceptance_____

FIGURE G-5

OVERNIGHT STORAGE RESERVOIR INLET-OUTLET BOX

EWP Unit Portland, Oregon

REFERENCE:
7-L-20090

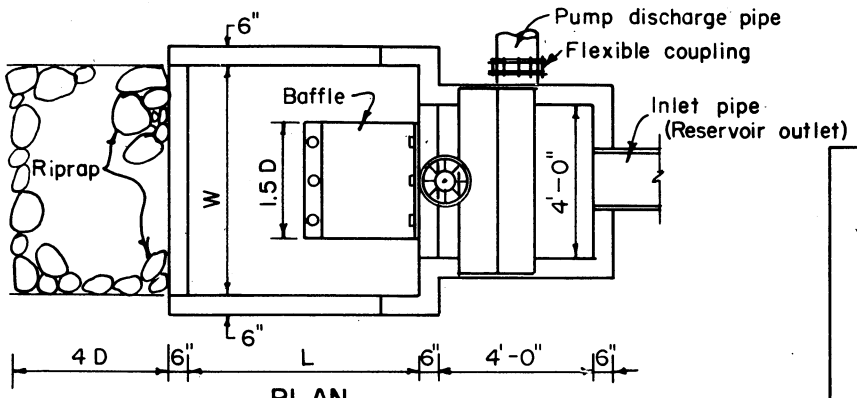

PLAN

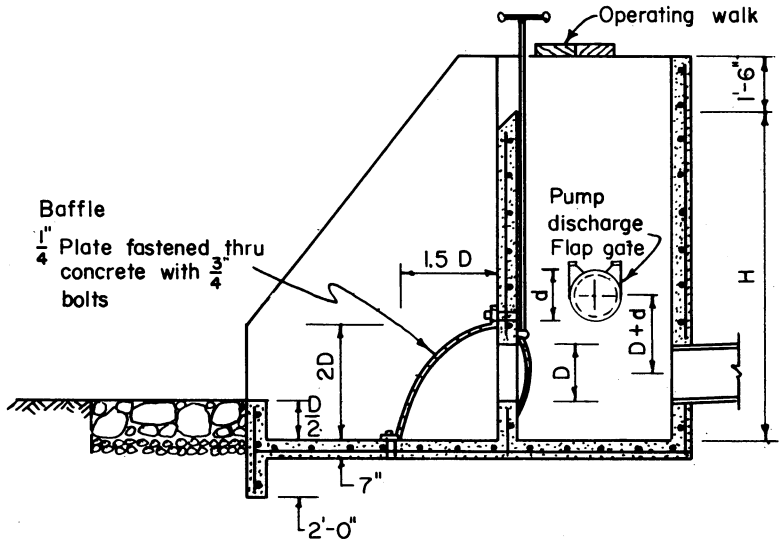

SECTION ON CENTERLINE

Gate Diameter - inches	Width of Stilling Basin	Max. Discharge - cfs.
D	W	Q
12	4'-0"	10
15	4'-0"	13
18	4'-6"	17
21	5'-3"	25
24	6'-0"	34
27	6'-9"	48
30	7'-6"	62
36	9'-0"	93

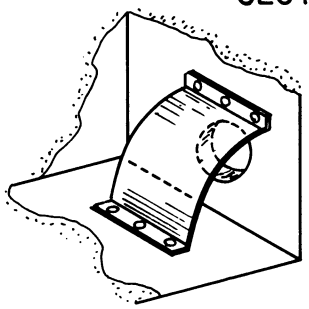

BAFFLE PERSPECTIVE

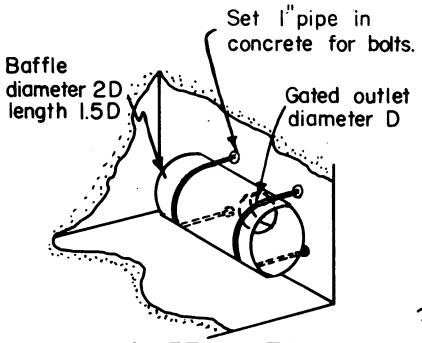

ALTERNATE BAFFLE DETAIL

Alternate baffle limited to 18" gate size. Baffle consists of welded steel pipe, or surplus hot water tank with ends cut off. Gate size opening, cut in side, is positioned over outlet and assembly is fastened to headwall with two 3/4" bars with threaded ends "U" shaped to fit baffle.

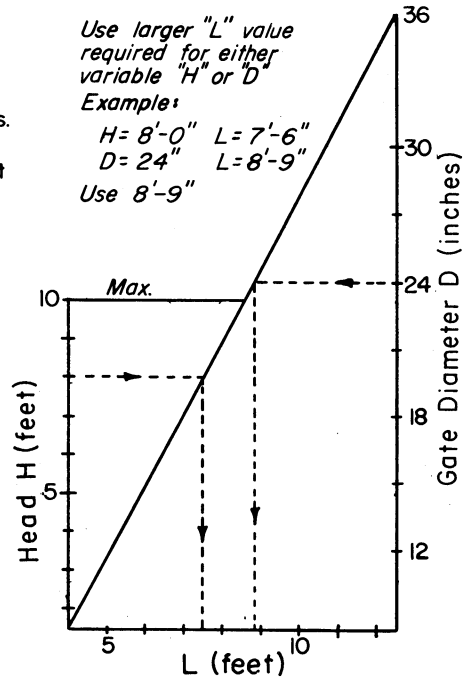

FIGURE G-6

OVERNIGHT STORAGE RESERVOIR INLET-OUTLET BOX

EWP Unit Portland, Oregon

REFERENCE:
7-L-20090

SECTION H - DRAWING LAYOUT AND SUMMARY

Contents

		Page
I.	REPRODUCTION PROCESS	H-1
II.	DETAIL SIZE	H-1
III.	DRAWING DEVELOPMENT	H-1
IV.	SUMMARY SHEET	H-2
V.	EXAMPLE	H-3
VI.	SUMMARY SHEET	H-5

Figures

H-1	Typical Layout - Structural Details	H-9
H-2	Typical Layout - Structural Details	H-11
H-3	Typical Layout - Inlet Structure Example	H-13
H-4	Typical Layout - Structural Details Example	H-15
H-5	Typical Layout - Outlet Details Example	H-17

SECTION H - DRAWING LAYOUT AND SUMMARY

The end result of our design is to develop a set of construction drawings from which the structure can be built. In selecting the proper detail scales, the reproduction process to be used should be known in advance.

I. REPRODUCTION PROCESS

Two methods of printing copies of the drawings are commonly used.

The most common method for small jobs where a limited number of prints are to be made is the ozalid process. No change in size from original to print is involved.

For larger jobs or where a greater number, 30 or more, copies are to be made a lithographic process is used. Printing presses for this process are limited in size, requiring a reduction in print size from the original normal "E" size drawing to a smaller "N" size.

The smaller scale drawings are used primarily for information to bidders while the larger drawings would be used for construction depending on the amount of detail on the drawing.

II. DETAIL SIZE

The choice of scale used will depend on the reproduction process and complexity of the detail. Legibility and clarity are essential. In some cases a perspective or isometric view is advisable.

Legibility depends upon the reader's ability to distinguish the features and read the legend without visual difficulties. This ability varies among people depending upon experience and eyesight. Clarity, as opposed to legibility, is associated with understanding and depends on detail. Clarity varies more with the experience of the reader than with eyesight.

The drawings should be of a scale and detail to convey the idea to a builder with normal vision and experience commensurable with the complexity of the project. Keep in mind it is erroneous to assume a larger scale makes details easier to read and understand.

The above reasoning was used in establishing the scales to be used for the details in this manual. Steel schedules, stem splices and titles have been included in two scales where applicable; each consistent with the final reproduction process to be used.

III. DRAWING DEVELOPMENT

Other than the standard drawings, preparation of the original

drawings for a particular job may be by one of two methods:

(1) Details in the appropriate scale from this book may be traced directly on tracing paper in the arrangements as shown on Figures H-1 and H-2, or

(2) A "mock up" of each construction drawing can be made by using detail sheets similar to those in this book, cutting out the appropriate parts and taping them directly to Bristol board in the suggested layout. If this process is used it should be done in the Cartographic Unit. From this "mock up" an 8" x 10" negative will be made and finally an "E" size film positive, which serves as the file copy. Chronoflex positives have a mat surface that will take pencil or ink if any changes or additions are to be made.

In either method, "fill-in" blanks and special details will require individual attention. Information regarding the component parts may be transmitted on sheets similar to Figures H-1 and H-2. The appropriate standard drawing or detail number should be listed in each block or completed summary sheets will provide more complete information to the draftsman. A sketch of special details should be included.

IV. SUMMARY SHEET

A summary form consisting of four pages with fill-in blanks has been developed to serve several needs. Properly filled in, the summary sheets will be a:

(1) Convenient check list of information needed for development of the details.

(2) Document the design decisions.

(3) Concise form for transmittal of information to the draftsman for completion of the construction drawings.

Additional sheets should be added, as needed, to present the special details for the particular job.

Completed summary sheets have been included in the example illustration in this section, pages H-5 to H-8. Data entered on the sheets has been printed in red to distinguish the information that will vary from job to job. Sections that do not apply to the given job have been voided (by large cross) to simplify review.

V. EXAMPLE

The problem from the previous sections has been extended for the 21" concrete pipe to show the completed reduced size drawing in Figures H-3, H-4 and H-5.

Figure H-3 is the standard inlet structure, Size H, completed for the 21" conduit.

Figure H-4 is made up of appurtenant details using the mosaic principle and a photographic process.

Figure H-5 is a standard impact basin drawing, Size C, completed for the 21" conduit. This figure is to be replaced with standard drawing ES-4070-040 when available.

All of the example drawings were 21" x 30" reduced to their present size.

To complete the construction drawings for the appurtenances, an embankment profile through the conduit will be required. The relative positions of the appurtenances should be shown on this profile usually located on the same sheet as the plan of the dam (not included in this example).

STATE FAR WEST		PROJECT Aldam Reservoir		
BY HWF	DATE 1-15-68	CHECKED BY FKM	DATE 1-16-68	JOB NO.
SUBJECT GATED OUTLET APPURTENANCES SUMMARY SHT.				SHEET 1 OF 4

GIVEN:

Em. Sp. El. 121.0
Pr. Sp. El. —

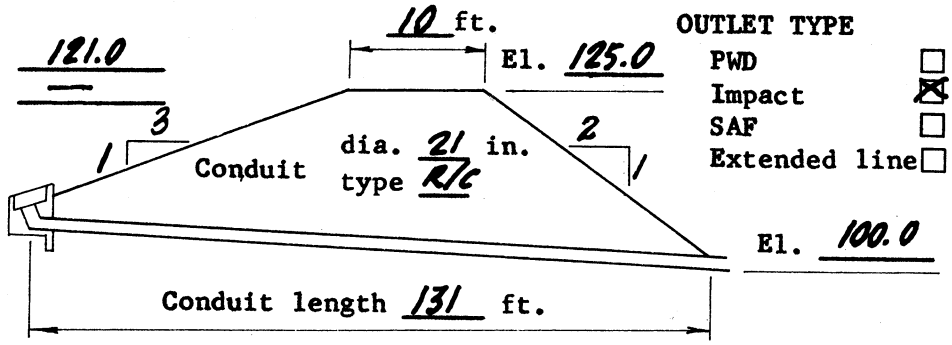

OUTLET TYPE
- PWD ☐
- Impact ☒
- SAF ☐
- Extended line ☐

Critical design
H 20 ft
Q 40 cfs

Foundation soil type
ϕ ____ C ____
Embankment soil type
ϕ ____ C ____

SW	CL	GW
SP	ML	GP
SM	CH	GM
SC	MH	GC

SELECTED DETAILS:

INLET

Fig. C-1
Conduit size Diameter 21 inches
Gate Size 21 Class 20-0
Type back
- Flat ☐
- Spigot ☒
- Flange ☐
- Other ☐

Fig. C-2 Std. Drawing No. 7-N-20465 A B C D E F G (H) I J

Fig. C-2, C-3 Trash rack

Longitudinal members 2" pipe

Cross bars size

	Single	Double
A	4"x 3/8"	
B	4 I 9.5	
Clip height z	4"	

STATE FAR WEST		PROJECT Aldam Reservoir		
BY HWF	DATE 1-15-68	CHECKED BY FRM	DATE 1-16-68	JOB NO.
SUBJECT GATED OUTLET APPURTENANCES SUMMARY SHT.				SHEET 2 OF 4

Fig. C-5	Rock protection	R	4	in.
		D_{75}	9½	in.
		Rock layer thickness	14	in.
		Filter layer thickness	5	in.
Fig. C-6	Vent pipe diameter		2	in.

CONTROL

Type of control: Mechanical ☒ Hydraulic ☐ Compare Alternate ☐

Mechanical Control

Fig. D-1 — Lift pedestal size 7-L-20544 A B (C) D E F

Lift Types:
- Handwheel diameter 24 in.
- Lift nut: cast iron ☐ bronze ☒
- Ball bearing: no ☐ yes ☒
- 15" geared crank ratio _____

Stem:
- Material: Bronze ☐ Stainless ☒ CR ☒
- Diameter 1½ inches

Encasement: yes ☒ no ☐

Stem pedestals: spacing 16 ft Number _____

Fig. D-6, 7, 8 — Gate stem guide type: channel ☒ welded ☐ cast ☐

Hydraulic Control

Weight slide gate _____ lbs. approx.

Fig. D-23 — Type cylinder mount: front ☐ rear ☐

Fig. D-21 — "L" _____ inches approx.
"S" _____ inches approx.

Cylinder bore diameter _____ inches
rod type: standard ☐ oversize ☐

Operation pressure _____ psi
Reservoir capacity _____ cubic inch
Tubing diameter _____ inches

Fig. D-24 — Power operator: no ☐ yes ☐
Control housing: type _____
location _____

STATE FAR WEST		PROJECT Aldam Reservoir		H-7
BY HWF	DATE 1-15-68	CHECKED BY FRM	DATE 7-16-68	JOB NO.
SUBJECT GATED OUTLET APPURTENANCES SUMMARY SHT.				SHEET 3 OF 4

CONDUIT

Conduit type: Metal gage _____

Fig. E- 2

R/C monolithic ☐
t _____ inches
rebar trans. _____ long. _____

Precast AWWA C300 ☐
AWWA C301 ☐
AWWA C302 ☒
other _____

Anti-seep collars, increase in creep length % 15☐ 20☐

Fig. E- 8

L 131 L' 111 V 2.0' Other _____
Number of collars 6

OUTLET

Fig. E-12

Outlet type: SAF ☐

Cantilever
Bent: Concrete ☐
Steel & timber ☐

Pool: Earth ☐
Armored ☐

Fig. F-2

Impact basin ES 4070

Fig. F-1

PWD size 7-E-20463 A B C D E F G H

Standard ☐ Modified 1 ☐ 2 ☐

Other _____

MISCELLANEOUS STRUCTURES

Fig. G-1

Water level gage: Timber ☐
Steel ☐

Fig. G-2

Intake strainer ☐

Fig. G-3

Timber catwalk ☐

Other _____

STATE FAR WEST		PROJECT Aldam Reservoir		
BY HWF	DATE 1-15-68	CHECKED BY FRM	DATE 1-16-68	JOB NO.
SUBJECT GATED OUTLET APPURTENANCES SUMMARY SHT.				SHEET 4 OF 4

DRAWING LAYOUT

Drawing size: Full ☐ Reduced ☒

REMARKS

1. Soils classification by field identification.
2. The gate will have machined cast iron seating surfaces and a circular opening.
3. In addition to the std. title block and Litho stickers, the following approval blocks will be required on all drawings.

Department Of Conservation And Development,
Division Of Flood Control

APPLICATION No. _____
APPROVED AS TO SAFETY:
DATE: _____ _____
SUPERVISOR

" I am hereby submitting for approval this plan as an officer of the United States Government authorized to approve and submit such plans."

_____
State Soil Conservation Engineer, Soil Conservation Service

Select from Figures E-3, E-4

ANTI-SEEP COLLAR

Select from Figures D-15, D-16, D-17

HANDWHEEL BRACKET OR BASE PLATE

STEEL SCHEDULE

R/C Conduit and Collar
Gate Stem Pedestal
Gate Lift Pedestal

Select from Figures C-2, C-3

TRASH RACK DETAILS

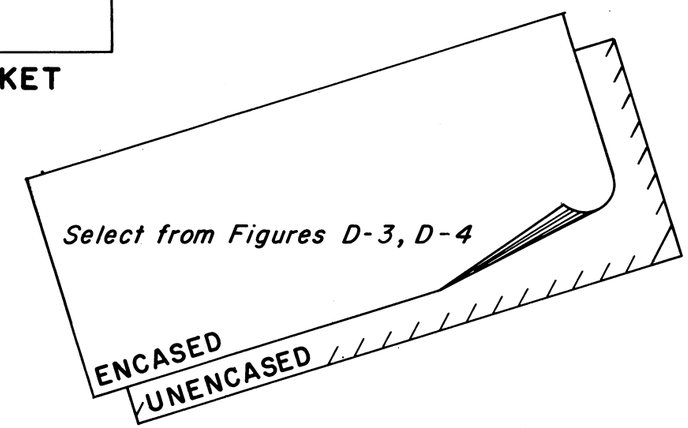

STEEL LAYOUT

See Fig. D-5

STRUCTURAL LAYOUT

See Fig. D-5

GATE STEM PEDESTAL

Select from sizes A thru E
See Figures D-10 thru D-14

GATE LIFT PEDESTAL

Select from Figures D-6, D-7, D-8

GATE STEM GUIDE

STATE APPROVAL BLOCK

TITLE BLOCK

FIGURE H-1
TYPICAL LAYOUT
STRUCTURAL DETAILS
EWP Unit Portland, Oregon

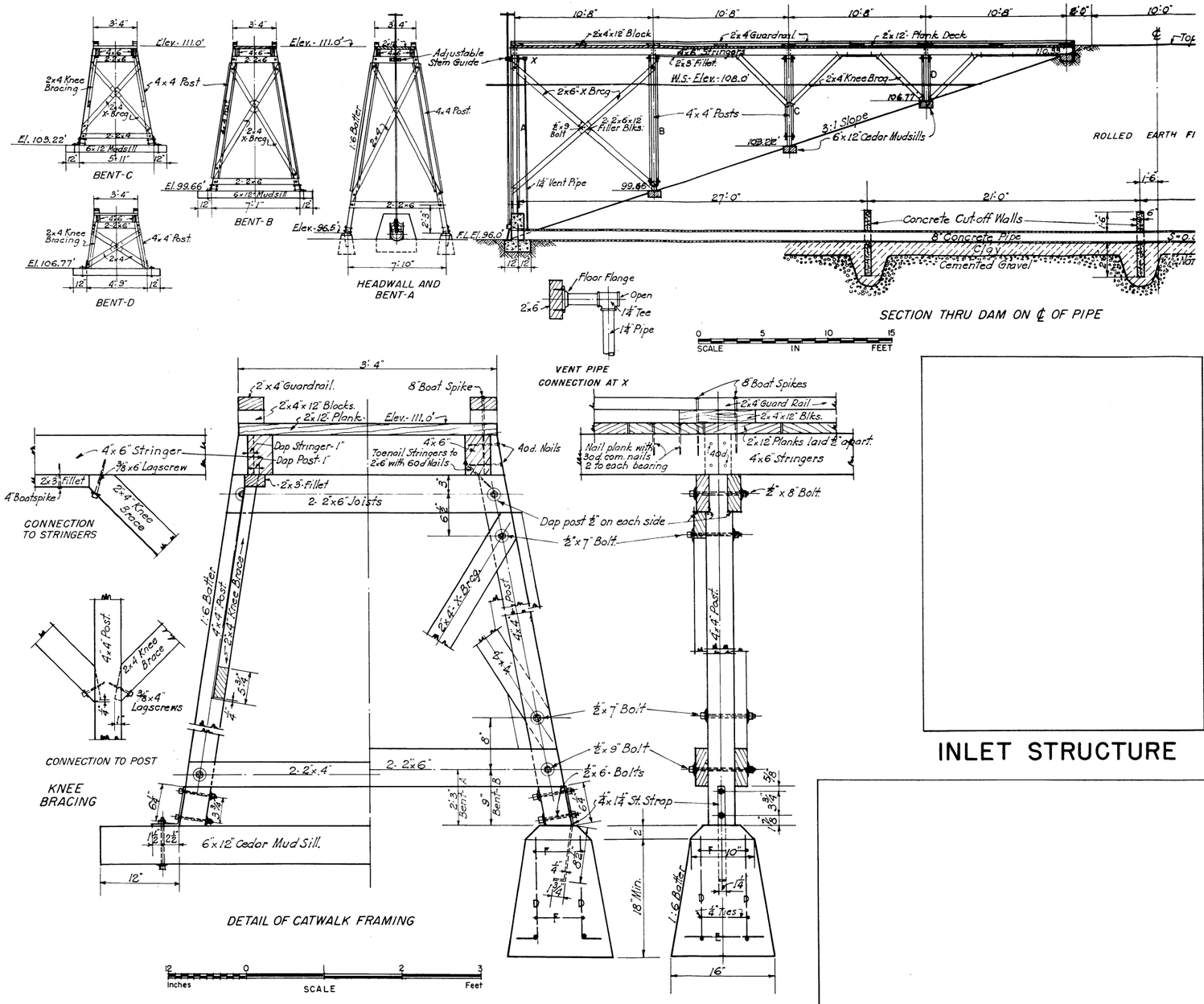

STEEL SCHEDULE

Gate Stem

Inlet

INLET STRUCTURE

GATE STEM GUIDE

STATE APPROVAL BLOCK

TITLE BLOCK

FIGURE H-2

TYPICAL LAYOUT STRUCTURAL DETAILS

EWP Unit Portland, Oregon

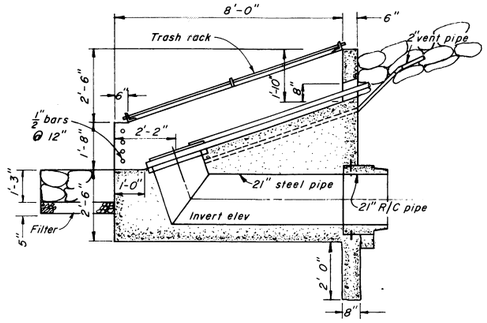

SECTIONAL ELEVATION

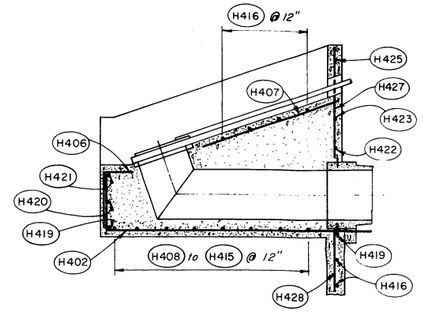

SECTIONAL ELEVATION

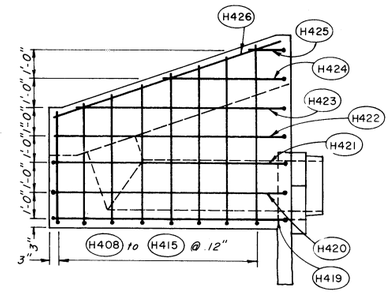

SECTIONAL ELEVATION

STEEL SCHEDULE

Location	Size	Mark	Type	Length	Quan.	A	B	C	Total Length
Slab	4	H401	2	10'-0"	4	2'-0"	8'-0"		40'-0"
"	4	H402	2	11'-3"	1	2'-0"	9'-3"		11'-3"
"	4	H403	SP	10'-3"	2	2'-0"	0'-9"	7'-6"	20'-6"
"	4	H404	2	3'-3"	2	2'-0"	1'-3"		6'-6"
"	4	H405	Str	5'-6"	2				11'-0"
"	4	H406	2	2'-9"	1	2'-0"	0'-9"		2'-9"
"	4	H407	Str	5'-0"	1				5'-0"
"	4	H408	2	6'-6"	2	2'-9"	3'-9"		13'-0"
"	4	H409	2	6'-9"	2	2'-9"	4'-0"		13'-6"
"	4	H410	2	7'-0"	2	2'-9"	4'-3"		14'-0"
"	4	H411	2	7'-3"	2	2'-9"	4'-6"		14'-6"
"	4	H412	2	7'-9"	2	2'-9"	5'-0"		15'-6"
"	4	H413	2	8'-0"	2	2'-9"	5'-3"		16'-0"
"	4	H414	2	8'-3"	2	2'-9"	5'-6"		16'-6"
"	4	H415	2	8'-9"	2	2'-9"	6'-0"		17'-6"
"	4	H416	Str	4'-6"	6				27'-0"
"	4	H417	Str	1'-6"	4				6'-0"
"	4	H418	Str	1'-0"	2				2'-0"
Sidewall	4	H419	2	13'-6"	2	2'-9"	8'-0"	2'-9"	27'-0"
"	4	H420	2	11'-9"	2	2'-9"	8'-0"	1'-0"	23'-6"
"	4	H421	2	12'-0"	2	2'-9"	8'-0"	1'-3"	24'-0"
"	4	H422	2	10'-9"	2	2'-9"	8'-0"		21'-6"
"	4	H423	2	10'-0"	2	2'-9"	7'-3"		20'-0"
"	4	H424	2	6'-0"	2	2'-0"	4'-0"		12'-0"
"	4	H425	2	6'-6"	1	1'-0"	4'-6"	1'-0"	6'-6"
Headwall	4	H426	Str	8'-3"	6				49'-6"
"	4	H427	Str	3'-9"	2				7'-6"
"	4	H428	Str	2'-0"	2				4'-0"

TOP FACE

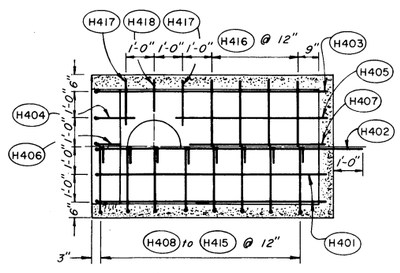

BOTTOM FACE

PLAN

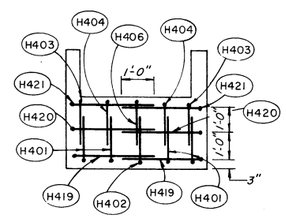

UPSTREAM ELEVATION

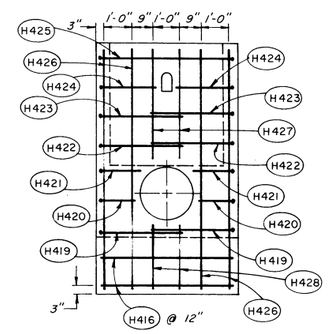

DOWNSTREAM ELEVATION

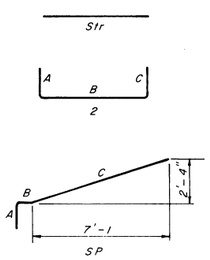

BAR TYPES

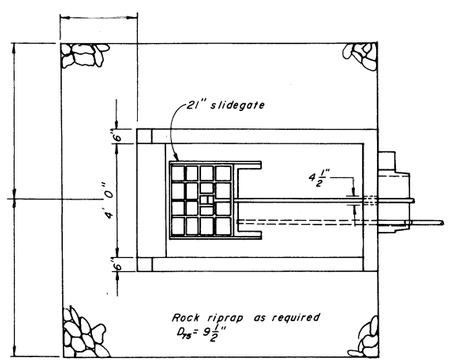

PLAN

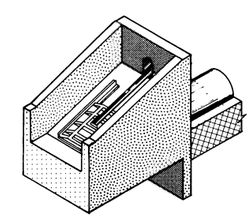

ISOMETRIC VIEW

SCALE 1 0 5 IN FEET

" I am hereby submitting for approval this plan as an officer of the United States Government authorized to approve and submit such plans."

State Soil Conservation Engineer, Soil Conservation Service

Department Of Conservation And Development,
Division Of Flood Control

APPLICATION No. _____
APPROVED AS TO SAFETY:
DATE: _____ _____
SUPERVISOR

INLET STRUCTURE SIZE H
PORTLAND OREGON E&WP UNIT

INLET STRUCTURE
ALDAM RESERVOIR
HOOD S.C.D.
TOYA COUNTY, OREGON

U. S. DEPARTMENT OF AGRICULTURE
SOIL CONSERVATION SERVICE

Designed H.W.F.
Drawn L.L.K.
Traced
Checked F.K.M.

FIGURE H-3
INLET STRUCTURE
EWP Unit Portland, Oregon

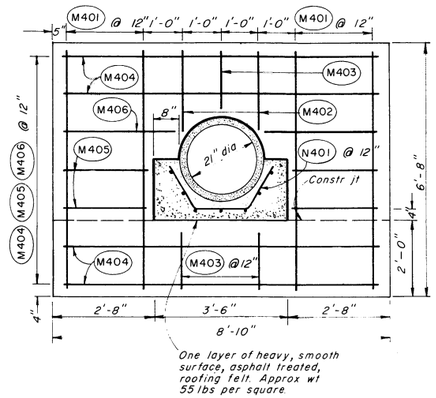

ELEVATION

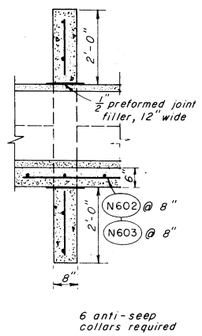

SECTION

ANTI-SEEP COLLAR

SCALE 1 0 5 IN FEET

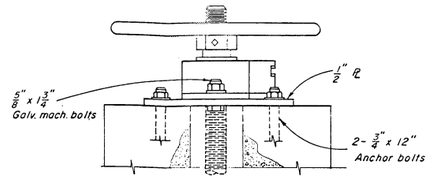

ELEVATION

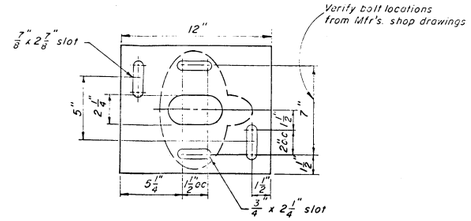

PLAN

BASE PLATE

SCALE 6 0 12 IN FEET

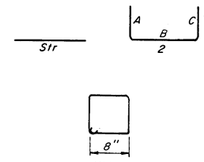

BAR TYPES

Note:
Fill with SAE 20 motor oil, approximately (92) gallons

Place weather seal above riprapped section clear of control structure

STEEL SCHEDULE

Location	Size	Mark	Type	Length	Quan	A	B	C	Total Length
GATE LIFT PEDESTAL									
Cutoff	4	C401	2	6'-3"	3	1'-6"	3'-6"	1'-3"	18'-9"
Sidewall	4	C402	2	4'-6"	1	1'-2"	2'-2"	1'-2"	4'-6"
"	4	C403	2	5'-0"	1	1'-5"	2'-2"	1'-5"	5'-0"
"	4	C404	2	4'-0"	2	1'-6"	1'-9"	0'-9"	8'-0"
"	4	C405	2	4'-3"	2	1'-6"	2'-0"	0'-9"	8'-6"
Cutoff	4	C406	Str	2'-3"	4				9'-0"
Sidewall	4	C407	Str	3'-0"	2				6'-0"
"	4	C408	Str	2'-9"	2				5'-6"
"	4	C409	Str	0'-6	2				1'-0"
GATE STEM PEDESTAL									
	4	P401	Hoop	3'-0"	12				36'-0"
	4	P402	Str	2'-4"	8				18'-8"
	4	P403	Str	2'-8	8				10'-8"
ANTI-SEEP COLLAR & CRADLE									
Anti-Seep Collar	4	M401	Str	6'-3"	36				225'-0"
(per collar)	4	M402	Str	2'-3"	12				27'-0"
"	4	M403	Str	1'-6"	24				36'-0"
"	4	M404	Str	8'-6"	24				204'-0"
"	4	M405	Str	2'-3"	24				54'-0"
"	4	M406	Str	3'-0"	12				36'-0"
Cradle	4	N401	SPB	4'-0"	132	1'-4"	1'-4"	1'-4"	528'-0"
	6	N602	Str	20'-0"	49				980'-0"
	6	N603	Str	6'-0	7				42'-0"

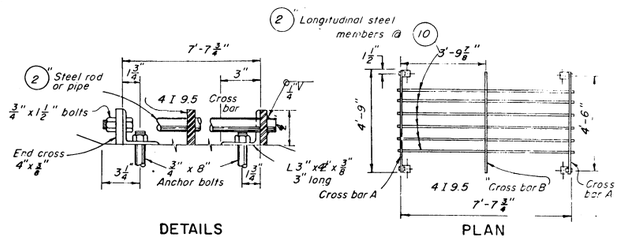

DETAILS PLAN

TRASH RACK

Not to Scale

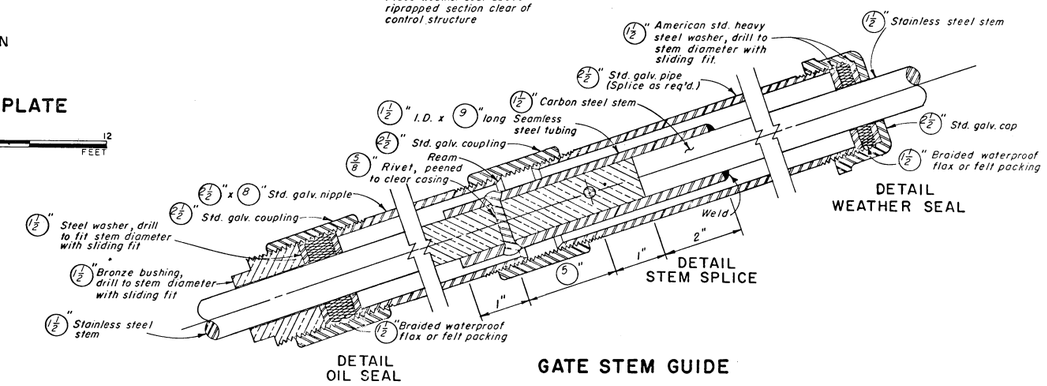

GATE STEM GUIDE

Not to Scale

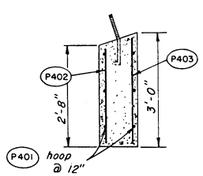

SECTIONAL ELEVATION

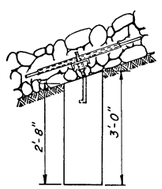

SIDE ELEVATION

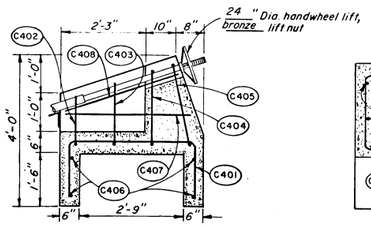

SECTIONAL ELEVATION

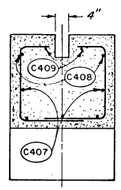

SECTION (A)

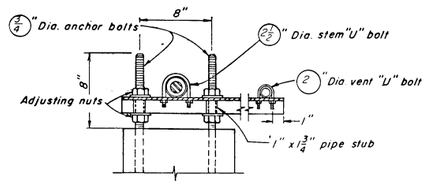

ELEVATION

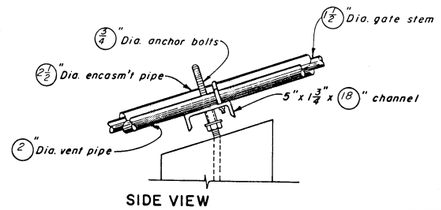

SIDE VIEW

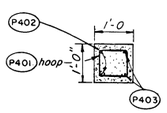

PLAN

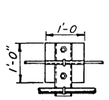

PLAN

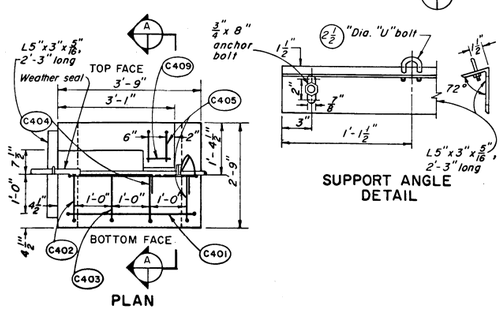

PLAN

SUPPORT ANGLE DETAIL

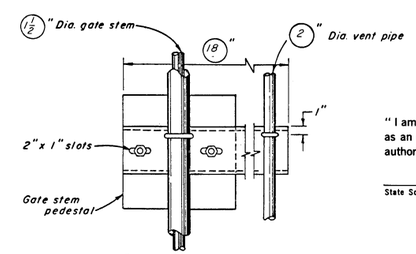

PLAN

"I am hereby submitting for approval this plan as an officer of the United States Government authorized to approve and submit such plans."

State Soil Conservation Engineer, Soil Conservation Service

GATE STEM PEDESTAL

GATE LIFT PEDESTAL

GATE STEM SPLICE

Not to Scale

SCALE 1 0 5 IN FEET

Department Of Conservation And Development,
Division Of Flood Control

APPLICATION No. _____
APPROVED AS TO SAFETY:
DATE: _____ _____
SUPERVISOR

STRUCTURAL DETAILS

ALDAM RESERVOIR

HOOD S.C.D.

TOYA COUNTY, OREGON

U. S. DEPARTMENT OF AGRICULTURE
SOIL CONSERVATION SERVICE

Designed H.W.F.
Drawn L.L.K.
Traced
Checked F.K.M.

FIGURE H-4

STRUCTURAL DETAILS

EWP Unit Portland, Oregon

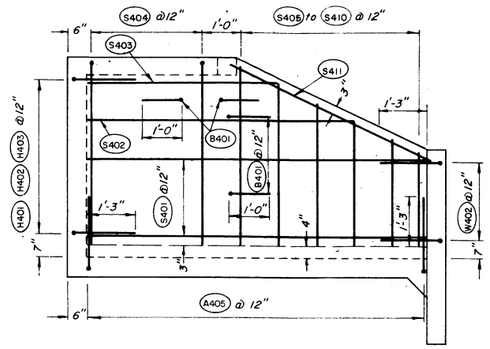

SIDEWALL ELEVATION

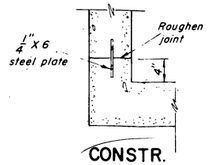

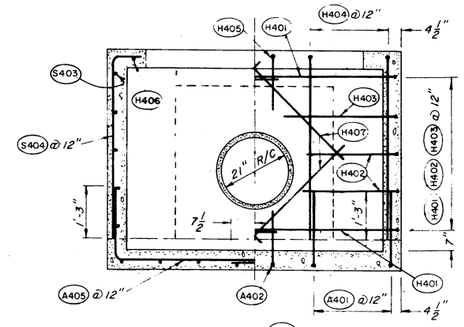

SEC. A

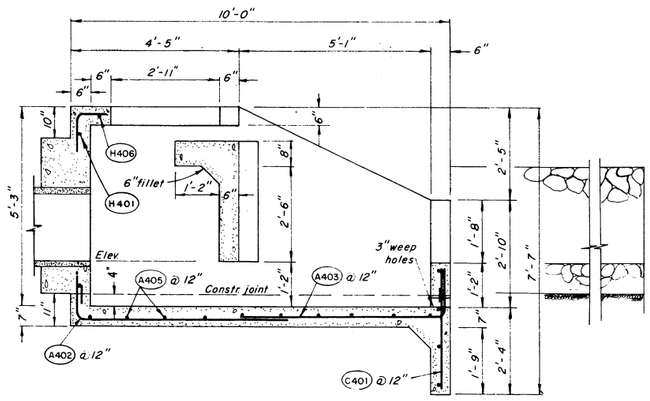

SECTIONAL ELEVATION

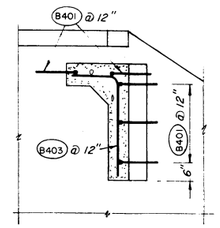

SEC. B

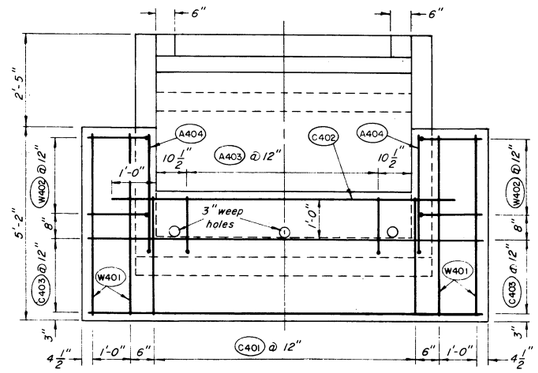

WINGWALL ELEVATION

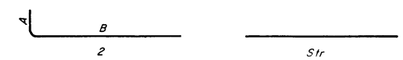

BAR TYPES

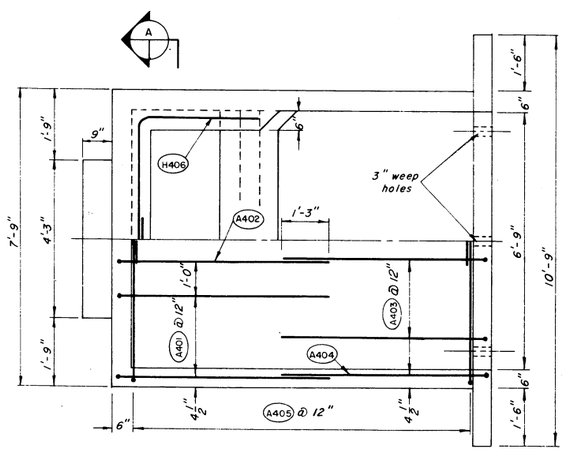

PLAN

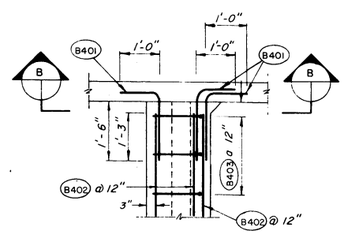

BAFFLE WALL

TO BE REPLACED BY
DRWG NO ES 4070-040

SEE FIG F-2

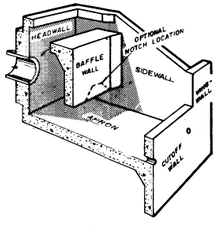

HALF PERSPECTIVE VIEW

STEEL SCHEDULE

LOCATION	MARK	SIZE	TYPE	LENGTH	QUAN.	A	B	TOTAL LENGTH
Apron	A401	4	2	7'-0"	6	1'-9"	5'-3"	42'-0"
"	A402	4	2	6'-6"	2	1'-3"	5'-3"	13'-0"
"	A403	4	2	6'-6"	6	1'-3"	5'-3"	39'-0"
"	A404	4	2	8'-3"	2	3'-0"	5'-3"	16'-6"
"	A405	4	2	6'-0"	20	1'-9"	4'-3"	120'-0"
Cutoff Wall	C401	4	Str	3'-9"	8			30'-0"
"	C402	4	Str	8'-9"	1			8'-9"
"	C403	4	Str	10'-3"	3			30'-9"
"	—	—	—	—	—			
Wingwall	W401	4	Str	4'-9"	4			19'-0"
"	W402	4	2	2'-9"	6	1'-3"	1'-6"	16'-6"
Sidewall	S401	4	Str	9'-0"	6			54'-0"
"	S402	4	Str	7'-0"	2			14'-0"
"	S403	4	Str	5'-0"	2			10'-0"
"	S404	4	2	5'-6"	8	0'-9"	4'-9"	44'-0"
"	S405	4	Str	4'-9"	2			9'-6"
"	S406	4	Str	4'-3"	2			8'-6"
"	S407	4	Str	3'-9"	2			7'-6"
"	S408	4	Str	3'-3"	2			6'-6"
"	S409	4	Str	2'-9"	2			5'-6"
"	S410	4	Str	2'-3"	2			4'-6"
"	S411	4	Str	6'-0"	2			12'-0"
Headwall	H401	4	2	5'-6"	4	1'-3"	4'-3"	22'-0"
"	H402	4	2	3'-6"	4	1'-3"	2'-3"	14'-0"
"	H403	4	2	4'-3"	2	1'-3"	3'-0"	8'-6"
"	H404	4	2	5'-3"	6	0'-6"	4'-9"	31'-6"
"	H405	4	2	1'-9"	2	0'-6"	1'-3"	3'-6"
"	H406	4	2	6'-9"	2	3'-9"	3'-0"	13'-6"
"	H407	4	Str	3'-6"	4			14'-0"
Baffle Wall	B401	4	2	2'-6"	10	1'-0"	1'-6"	25'-0"
"	B402	4	Str	6'-3"	5			31'-3"
"	B403	4	2	4'-0"	7	1'-3"	2'-9"	28'-0"

TABLE OF QUANTITIES	
Concrete	cu. yd.
Reinforcing steel	lbs

"I am hereby submitting for approval this plan as an officer of the United States Government authorized to approve and submit such plans."

State Soil Conservation Engineer, Soil Conservation Service

Department Of Conservation And Development,
Division Of Flood Control

APPLICATION No. _____
APPROVED AS TO SAFETY:
DATE: _____ _____
SUPERVISOR

IMPACT BASIN SIZE C
PORTLAND, OREGON E&WP UNIT

OUTLET DETAILS

ALDAM RESERVOIR

HOOD S.C.D.

TOYA COUNTY, OREGON

U. S. DEPARTMENT OF AGRICULTURE
SOIL CONSERVATION SERVICE

Designed H.W.F.
Drawn L.L.K.
Traced
Checked F.K.M.

FIGURE H-5

IMPACT BASIN

EWP Unit Portland, Oregon

7-E-20392-C

SECTION I - BIBLIOGRAPHY

Contents | Page

General I-1

Commercial Catalogs I-2

SECTION I - BIBLIOGRAPHY

Albertson, M. L.; Dai, Y. B.; Jensen, R. A.; and Rouse, H. "Diffusion of Submerged Jets," Transactions of the American Society of Civil Engineers, Volume 115, 1950, pp. 639-697.

American Concrete Institue, "Erosion Resistance of Concrete in Hydraulic Structures," ACI Committee 210, Title No. 52-18, pp. 259-271.

Armco, "Handbook of Water Control," Lederer, Street, and Zeus Co., Inc., Berkeley, California, 1946 pp. 383-512.

Arque, J. R., Discussion of "Hydraulic Design of Stilling Basins: Small Basins for Pipe or Open Channel Outlets - No Tailwater Required (Basin VI)" by Bradley, J. N. and Peterka, A. J., ASCE Proceedings Paper 1406, October 1957. Discussion appears in Journal of the Hydraulics Division, Volume 84, No. HY2, April 1958, pp. 1616-77 to 1616-91.

Ball, J. W., "Cavitation Characteristics of Gate Valves and Globe Valves," Transactions of the American Society of Mechanical Engineers, Volume 79, No. 6, August 1957, pp. 275-81.

Ball, J. W., "Limitations of Metergates," Journal of the Irrigation & Drainage Division, Proceedings Paper No. 3359, December 1962.

Ball, J. W. "Hydraulic Characteristics of Gate Slots," Journal of the Hydraulics Division, ASCE, Volume 85, HY10, October 1959, pp. 81-114.

Blaisdell, F. W., "The SAF Stilling Basin," Soil Conservation Service, SCS-TP-79, May 1949, pp. 1-14.

Hall, L. S., Kalinske, A. A., & Robertson, J. M., "Entrainment of Air in Flowing Water, A Symposium," with discussions, Transactions of the American Society of Civil Engineers, 1943, pp. 1393-1516.

Joint Industry Conference, "Hydraulic Standards for Industrial Equipment," Hydraulics and Pneumatics, 1959, pp. R-1 to R-30.

Bureau of Reclamation, "Design of Small Dams," U. S. Government Printing Office, Washington, D. C., pp. 291-311, 326-372, 456-459.

Bureau of Reclamation, "Turbines and Pumps," Commissioners Office, Denver, Colorado, Design Standards No. 6, 1957, Chapter 7, Figure 68.

Bureau of Reclamation, "Valves, Gates and Steel Conduits," Design Standards No. 7.

Bureau of Reclamation, "Hydraulic Design of Stilling Basins and Energy Dissipators," Engineering Monograph No. 25, Commissioner's Office, Denver, Colorado.

Bureau of Public Roads, "Hydraulic Charts for the Selection of Highway Culverts", Hydraulic Engineering Circular No. 5.

Corps of Engineers, U. S. Army, "Hydraulic Design Criteria," Waterways Experiment Station.

"Handbook of Steel Drainage and Highway Construction Products," American Iron and Steel Institue, New York, New York, 1967.

Mechanical Engineer's Handbook, Lionel Marks, Fifth Edition, 1951.

Soil Conservation Service, "Hydraulics," National Engineering Handbook, Section 5.

Soil Conservation Service, "Structural Design," National Engineering Handbook, Section 6.

Soil Conservation Service, "Chute Spillways," National Engineering Handbook, Section 14.

Soil Conservation Service, "Engineering Practice Standards," Part I, National Engineering Handbook, Section 2.

Soil Conservation Service, "Earth Spillways," Technical Release No. 3.

Soil Conservation Service, "Height of Water Column Supported by Atmospheric Pressure," Technical Release No. 4.

Soil Conservation Service, "Engineering Design Standards - Far West States."

Soil Conservation Service, "Specifications For Construction Contracts," National Engineering Handbook, Section 20.

Commercial Catalogs

Armco, "Armco Water Control Gates Catalog," Armco Drainage & Metal Products, Inc., Middletown, Ohio, Catalog G-3263, 1963.

Carter Fluid Power Controls, Bulletin 3000B, Series S, Carter Controls, Inc., Lansing, Illinois.

Rodney Hunt, "Sluice Gates," Rodney Hunt Machine Company, Orange, Massachusetts, Catalog No. WC160, 1960.

SECTION J - APPENDIX

Contents

	Page
CRITERIA AND PROCEDURE FOR DESIGN OF THE STANDARD PWD BASIN	
I. CRITERIA	J-1
II. DESIGN CONSIDERATIONS AND METHOD OF ANALYSIS	J-2

Tables

J-C1	Quantity	Survey	for	Inlet Structure	J-5
J-D1	"	"	"	Gate Stem Pedestals	J-6
J-D2	"	"	"	Lift Pedestals	J-6
J-E1	"	"	"	R/C Monolithic Conduit	J-7
J-E2	"	"	"	R/C Anti-Seep Collars	J-8
J-E3	"	"	"	Conduit Cradle Type A1 or A2 Dams Class (a) Over 50 Feet High and Class (b) and (c)	J-9
J-E4	"	"	"	Conduit Cradle Type A1 or A2 Dams Less Than 50 Feet High	J-10
J-E5	"	"	"	Conduit Cradle Type B1 Bedding	J-11
J-E6	"	"	"	Anti-Seep Collars for Type A1 and A2 Cradles for Dams Class (a) Over 50 Feet High and Class (b) and (c)	J-12
J-E7	"	"	"	Anti-Seep Collars Type A1 and A2 Cradles For Dams Class (a) Less Than 50 Feet High	J-13
J-E8	"	"	"	Anti-Seep Collars Type B1 Bedding for Dams Class (a) Over 50 Feet High and Class (b) and (c)	J-14
J-E9	"	"	"	Anti-Seep Collars Type B1 Bedding for Dams Class (a) Less Than 50 Feet High .	J-15
J-F1	"	"	"	PWD Basin	J-16
J-F2	"	"	"	Impact Basin	J-17

SECTION J - APPENDIX

Criteria and Procedure for the Design of Standard PWD Outlet Structures

I. CRITERIA

A. For general proportions and profile: Refer to ASCE Journal of the Hydraulics Division, Vol. 84, No. HY2, April 1958, Part I, pages 1616-77 to 91. Discussion by J. R. Argue of paper, "The Hydraulic Design of Stilling Basins, Small Basins for Pipe or Open Channel Outlet - No Tail Water Required" (Basin VI).

B. Limitations on use of standard plans.

1. Pipe velocities (pipe exit or outlet structure entrance) - Maximum allowable velocity is associated with an equivalent head of three conduit diameters at full pipe flow, except for conduit diameter 18 in. and smaller. Although not recommended, where this type of basin is to be used for heads in excess of 3d, a longer basin will be required to contain the jet. To simplify the number of standard structures, the length of next larger structure is to be checked for jet trajectory. Although additional width is wasted, refining the engineering analysis is not justified on the basis of economy.

2. Tailwater - adequate tailwater depth is required to assure dissipation of jet energy and diffusion of the flow to distribute it across the exit sill.

3. In uplift from high groundwater conditions, special backfill or design modification is required.

C. Standardization of structure size: The following structure sizes will cover a wide range of conduit sizes and discharge capacity.

Size	Conduit Dia. In.1/	Length2/	Width3/	Cutoff4/
A	8	3'-6"	2'-8"	2'-0"
B	10 - 12	4'-6"	3'-6"	2'-0"
C	12 - 18	6'-6"	5'-4"	2'-0"
D	18 - 30	9'-6"	8'-3"	2'-3"
E	30 - 36	12'-7"	11'-0"	3'-0"
F	36 - 48	16'-8"	14'-4"	4'-0"
G	48 - 60	20'-9"	17'-10"	4'-0"
H	60	24'-10"	21'-4"	4'-0"

1/ Full pipe flow.
2/3/ The length and width are a function of a fixed sidewall flare.
4/ Cutoff is total height of downstream transverse sill.

D. Allowable Stresses

1. Concrete

f'c = 3000 psi
fc = 1350 psi

2. Reinforcing

fs = 20,000 psi
Shrinkage and temperature steel p = 0.0025 in each direction

3. Earth bearing pressures

Passive
K_p = 2.0
ϕ = 20° silty clay
Rock riprap required downstream of the cutoff for a distance equal to 4 x conduit diameter.

E. Loads

1. Lateral soil pressure

EFP = 65 pcf
K_a = 0.5

2. Sliding resistance

f = 0.33 masonry on clay

II. DESIGN CONSIDERATIONS AND METHODS OF ANALYSIS

The selection of the PWD basin in preference to other types of outlets is based primarily on economic consideration within the range of hydraulic and site limits. As an irrigation outlet this structure will be used under controlled outflow conditions. Its size selection is not necessarily based on the total available head at full pipe capacity but more likely at a Q that is maintained fairly constant over a range of heads by means of gate control. If the maximum possible discharge is to be passed through the structure, the structure should be sized for this discharge or added protection provided downstream of the structure for the short duration maximum flow.

Tailwater and downstream channel stability (erosion) must be predictable.

A. Structural elements

1. Sidewalls and headwalls are designed as horizontal and vertical beams divided by an assumed 45° boundary line.

2. Apron or slab is designed as a rigid U section.

B. Stability

1. Sliding - with the use of a downstream cutoff wall as listed in the "Standardized Structure Size" and with the use of rock riprap in the channel, no sliding problem is anticipated.

2. Overturning - no anticipated problem.

3. Uplift - special backfill material and drainage facilities are required in site conditions with high water table.

Table J-C1

QUANTITY SURVEY FOR INLET STRUCTURE

Structure Size	Conduit Inside Diameter	Reinforcing Steel	Type of Pipe		
			ASTM C76 AWWA C302	AWWA C300 AWWA C301	Welded Steel & CMP
			Concrete Volume		
	in.	lb	cu yd	cu yd	cu yd
A	8	109	--	--	1.33
B	10	108	--	--	1.32
C	12	127	1.47	--	1.57
D	14'	129	--	--	1.84
E	15	144	1.87	--	--
"	16	"	--	1.70	1.97
F	18	174	2.73	2.52	2.91
G	20	209	--	3.04	3.40
H	21	302	5.90	--	--
"	24	"	4.28	4.20	4.72
I	27	328	6.15	--	--
"	30	"	5.73	5.58	6.52
"	33	"	5.33	--	--
J	36	366	6.15	5.88	7.00

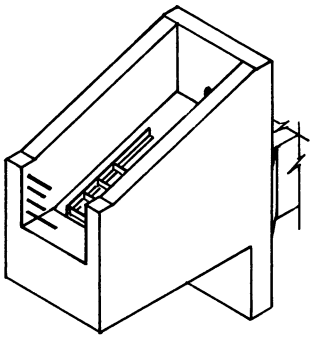

TABLE J-D1

QUANTITY SURVEY FOR GATE STEM PEDESTAL

Concrete volume	0.10 cu yd
Reinforcing steel	13.68 lb

TABLE J-D2

QUANTITY SURVEY FOR GATE LIFT PEDESTAL

Structure Size	Concrete Volume cu yd	Reinforcing Steel lb
A	0.27	--
B	0.47	--
C	0.74	44.25
D	2.41	18.05
E	3.70	24.05

TABLE J-E1

QUANTITY SURVEY FOR R/C MONOLITHIC CONDUIT
(Cu yd per lineal foot)

Conduit Inside Diameter D - inches	Thickness - t - inches						
	6	8	12	15	18	21	24
8	0.090	0.135	-	-	-	-	-
12	0.119	0.173	0.304	-	-	-	-
15	0.142	0.202	0.346	0.475	-	-	-
18	0.166	0.232	0.388	0.527	0.685	-	-
21	0.191	0.263	0.432	0.580	0.747	0.932	-
24	0.217	0.295	0.476	0.634	0.810	1.004	1.217
30	0.272	0.362	0.568	0.744	0.939	1.152	1.383
36	0.331	0.436	0.664	0.859	1.072	1.303	1.553
42	0.394	0.509	0.764	0.977	1.208	1.458	1.727

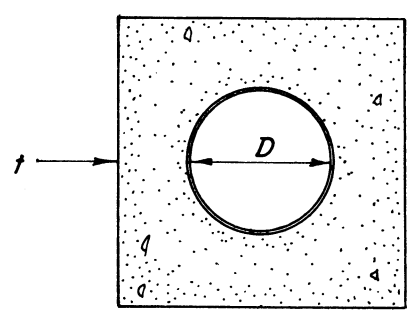

TABLE J-E2

QUANTITY SURVEY R/C MONOLITHIC CONDUIT ANTI-SEEP COLLARS

D+2t	V= Minimum projection of cutoff from conduit casing-ft.				
	1.50 1/	1.75 1/	2.00 1/	2.50 2/	3.00 2/
2'-0"	0.496 31.15	0.620 35.15	0.753 39.15	1.058 65.0	1.409 75.8
2'-3"	0.531 32.45	0.660 36.45	0.776 44.95	1.093 67.1	1.478 84.8
2'-6"	0.567 33.8	0.702 37.8	0.825 46.3	1.177 69.1	1.552 86.8
2'-9"	0.613 35.15	0.734 42.9	0.858 47.6	1.237 71.1	1.624 88.8
3'-0"	0.640 36.45	0.786 44.3	0.960 48.9	1.296 73.2	1.696 90.8
3'-3"	0.674 40.9	0.805 45.6	1.012 54.75	1.358 80.8	1.766 92.8
3'-6"	0.712 42.4	0.871 46.9	1.042 56.1	1.417 82.8	1.838 101.9
3'-9"	0.721 43.6	0.910 52.2	1.089 57.45	1.484 78.2	1.910 103.9
4'-0"	0.783 44.9	0.953 53.4	1.148 63.2	1.537 86.9	1.982 113.2
4'-3"	0.806 49.6	0.983 54.8	1.171 65.5	1.607 94.5	2.021 115.1
4'-6"	0.854 50.75	1.036 59.8	1.231 66.0	1.655 96.6	2.127 117.1
4'-9"	0.892 51.6	1.078 61.2	1.280 67.2	1.714 98.6	2.199 119.2
5'-0"	0.925 53.4	1.122 62.5	1.328 68.6	1.776 106.3	2.269 128.2

Note: Top figures are concrete volumes in cu yd; bottom figures are steel quantities in lb. Steel quantities are based on a maximum bar spacing on 12 in. center to center.

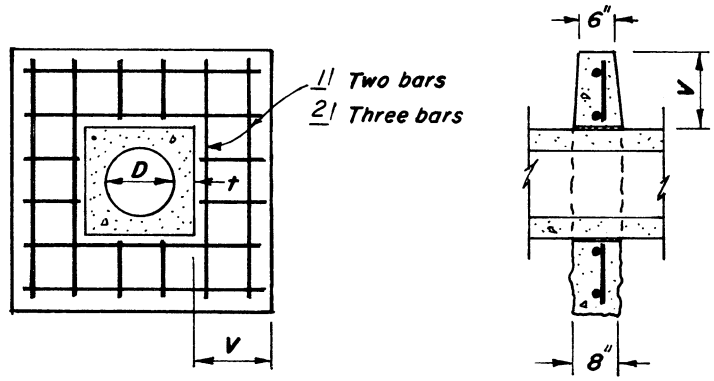

1/ Two bars.

2/ Three bars.

TABLE J-E3

QUANTITY SURVEY CONDUIT CRADLE TYPE A1 or A2
FOR DAMS CLASS (a) OVER 50 FEET HIGH AND CLASS (b) and (c)
(per foot conduit length)

Conduit Inside Diameter	Reinforcing Steel (Type A1 only)	Type of Conduit		
		ASTM C-76 ASTM C-361 AWWA C-302 (f'_c=6000 psi)	AWWA C-300 AWWA C-302 (f'_c=4500 psi)	AWWA C-301 1
		Concrete Volume		
inch	lb	cu yd	cu yd	cu yd
12	7.60	0.0930	--	--
15	9.41	0.1034	--	--
16	9.34	0.1145	--	0.1036
18	9.56	0.1263	--	0.1151
20	12.78	0.1386	0.1478	0.1271
21	13.07	0.1484	--	--
24	13.35	0.1629	0.1739	0.1602
27	13.72	0.1921	0.1994	--
30	13.86	0.2384	0.2329	0.2172
33	14.34	0.2569	0.2687	--
36	17.51	0.2943	0.3068	0.2820
42	24.17	0.3781	0.3992	0.3604
48	24.82	0.4674	0.4828	0.4478
54	28.60	0.5656	0.5849	0.5560
60	35.28	0.6754	0.6964	0.6650

1 AWWA C-301 ordinarily not available in diameter less than 42".

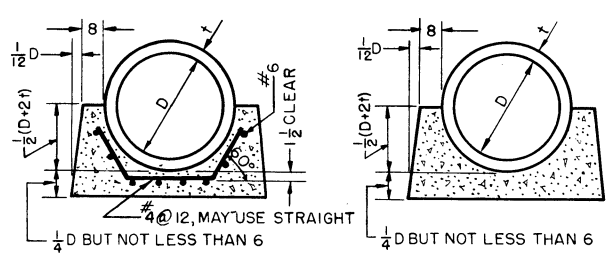

A1 CRADLE A2 CRADLE

TABLE J-E4

QUANTITY SURVEY CONDUIT CRADLE TYPE A1 AND A2
FOR DAMS LESS THAN 50 FEET HIGH
(per foot conduit length)

Conduit Inside Diameter	Reinforcing Steel (Type A1 only)	Type of Conduit: ASTM C-76, ASTM C-361, AWWA C-302 (f'_c=6000 psi)	Type of Conduit: AWWA C-300, AWWA C-302 (f'_c=4500 psi)	Type of Conduit: AWWA C-301 1/
		Concrete Volume		
inch	lb	cu yd	cu yd	cu yd
12	7.60	0.0903	--	--
15	9.41	0.1042	--	--
16	9.34	0.1101	--	0.0995
18	9.56	0.1210	--	0.1101
20	12.78	0.1321	0.1410	0.1210
21	13.07	0.1372	--	--
24	13.35	0.1540	0.1646	0.1514
27	13.72	0.1808	0.1879	--
30	13.86	0.2094	0.2185	0.2034
33	14.34	0.2399	0.2512	--
36	17.51	0.2740	0.2859	0.2622
42	24.17	0.3463	0.3616	0.3332
48	24.82	0.4307	0.4454	0.4121
54	28.60	0.5191	0.5374	0.5100
60	35.28	0.6177	0.6376	0.6078

1/ AWWA C-301 not ordinarily available in diameters less than 42".

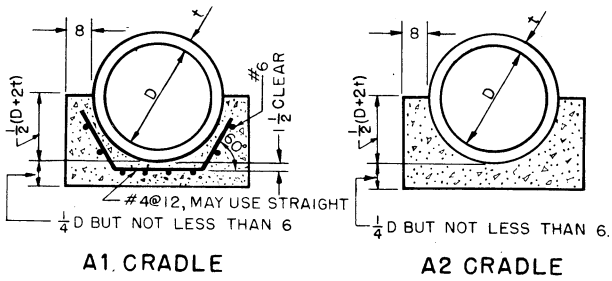

A1 CRADLE A2 CRADLE

TABLE J-E5

QUANTITY SURVEY CONDUIT CRADLE TYPE B1 BEDDING
FOR CLASS (a), (b) and (c) DAMS
(per foot conduit length)

Conduit Inside Diameter	Reinforcing Steel	Type of Conduit		
		ASTM C-76 ASTM C-361 AWWA C-302 (f'_c=6000 psi)	AWWA C-300 AWWA C-302 (f'_c=4500 psi)	AWWA C-301 1/
		Concrete Volume		
inch	lb	cu yd	cu yd	cu yd
12	--	0.0215	--	--
15	--	0.0266	--	--
16	--	0.0289	--	0.0249
18	--	0.0331	--	0.0289
20	--	0.0375	0.0410	0.0331
21	--	0.0390	--	--
24	--	0.0463	0.0507	0.0452
27	--	0.0536	0.0565	--
30	--	0.0612	0.0649	0.0558
33	--	0.0693	0.0738	--
36	--	0.0784	0.0832	0.0738
42	--	0.0989	0.1034	0.0923
48	--	0.1199	0.1256	0.1127
54	--	0.1426	0.1496	0.1391
60	--	0.1680	0.1756	0.1643

1/ AWWA C-301 not ordinarily available in diameters less than 42".

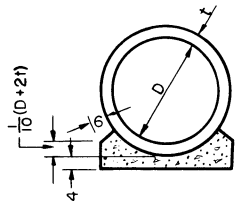

B1 BEDDING

TABLE J-E6

QUANTITY SURVEY ANTI-SEEP COLLARS TYPE A1 AND A2 CRADLES
FOR DAMS CLASS (a) OVER 50 FEET HIGH AND CLASS (b) AND (c)

Conduit Inside Diameter	Reinforcing Steel	Type of Conduit		
		ASTM C-76 ASTM C-361 AWWA C-302 (f'_c=6000 psi)	AWWA C-300 AWWA C-302 (f'_c=4500 psi)	AWWA C-301
		Concrete Volume		
inches	lb	cu yd	cu yd	cu yd
12	77.8	1.387	--	--
15	81.9	1.462	--	--
16	81.5	1.577	--	1.452
18	83.2	1.571	--	1.521
20	84.6	1.643	1.665	1.578
21	86.6	1.661	--	--
24	90.6	1.750	1.771	1.730
27	98.3	1.836	1.865	--
30	104.6	1.909	1.966	1.906
33	110.0	2.030	2.021	--
36	102.9	2.192	2.163	2.050
42	112.2	2.322	2.321	2.235
48	122.6	2.519	2.559	2.471
54	132.1	2.702	2.750	2.685
60	137.0	2.90	2.950	2.877

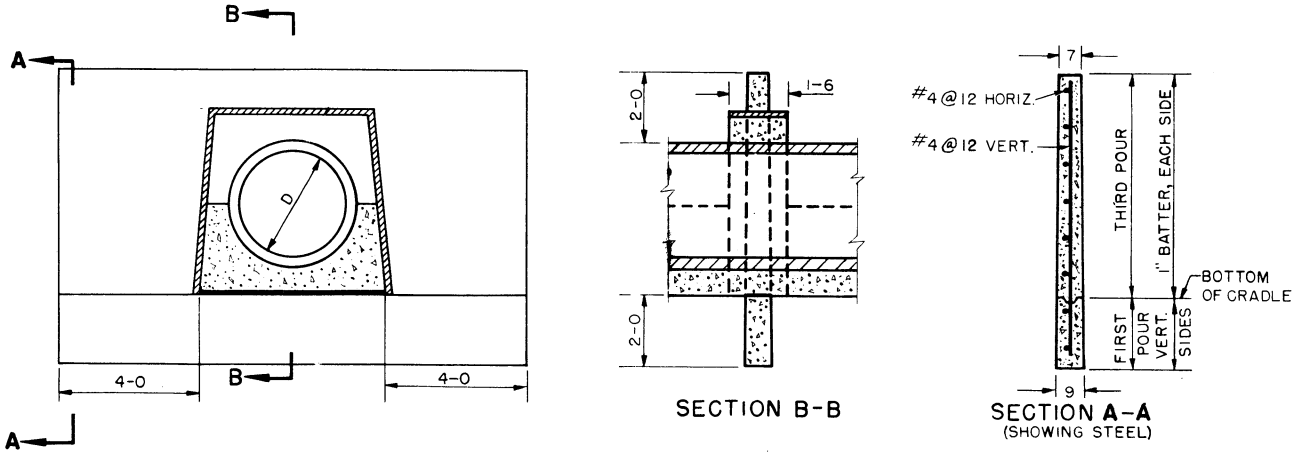

TABLE J-E7

QUANTITY SURVEY ANTI-SEEP COLLARS TYPE A1 AND A2 CRADLES
FOR DAMS CLASS (a) LESS THAN 50 FEET HIGH
(per collar)

Conduit Inside Diameter	Reinforcing Steel	Type of Conduit		
		ASTM C-76 ASTM C-361 ASTM C-302 (f'_c=6000 psi)	AWWA C-300 AWWA C-302 (f'_c=4500 psi)	AWWA C-301
		Concrete Volume		
inch	lb	cu yd	cu yd	cu yd
12	54.45	1.055	--	--
15	59.2	1.139	--	--
16	60.5	1.151	--	1.099
18	62.5	1.195	--	1.148
20	63.7	1.242	1.279	1.195
21	65.55	1.270	--	--
24	67.55	1.333	1.356	1.321
27	76.0	1.413	1.439	--
30	77.5	1.492	1.523	1.471
33	80.45	1.569	1.610	--
36	81.95	1.655	1.692	1.627
42	86.1	1.878	1.847	1.784
48	99.4	2.008	2.038	1.952
54	110.0	2.160	2.218	2.239
60	118.2	2.343	2.390	2.325

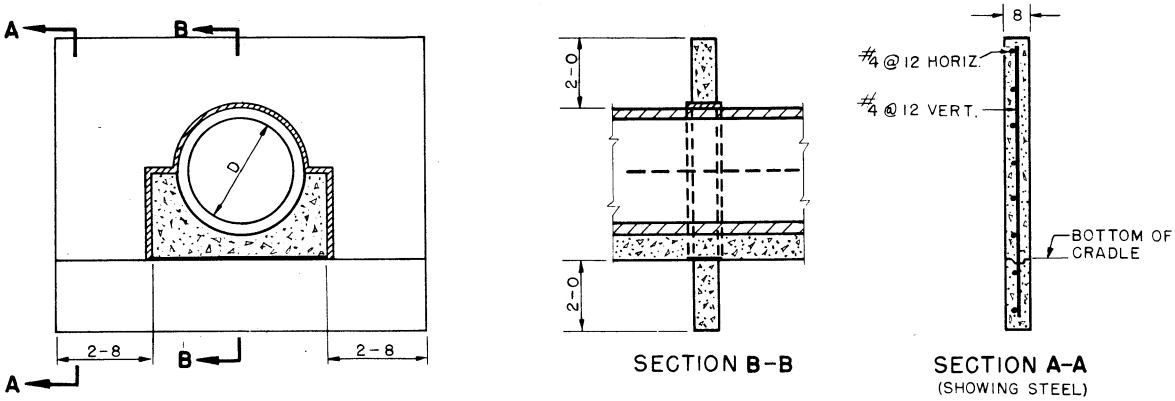

TABLE J-E8

QUANTITY SURVEY ANTI-SEEP COLLARS TYPE B1 BEDDING
FOR DAMS CLASS (a) OVER 50 FEET HIGH AND CLASS (b) AND (c)
(per collar)

Conduit Inside Diameter	Reinforcing Steel	Type of Conduit		
		ASTM C-76 ASTM C-361 ASTM C-302 (f'_c=6000 psi)	AWWA C-300 AWWA C-302 (f'_c=4500 psi)	AWWA C-301
		Concrete Volume		
inch	lb	cu yd	cu yd	cu yd
12	66.5	1.256	--	--
15	68.6	1.332	--	--
16	68.1	1.367	--	1.311
18	69.6	1.420	--	1.368
20	76.0	1.481	1.559	1.422
21	78.0	1.503	--	--
24	82.3	1.590	1.641	1.579
27	84.8	1.673	1.767	--
30	85.8	1.700	1.801	1.724
33	108.6	1.845	1.891	--
36	112.2	1.943	1.991	1.887
42	117.4	2.133	2.165	2.075
48	129.8	2.320	2.365	2.258
54	140.9	2.495	2.560	2.477
60	148.6	2.681	2.750	2.687

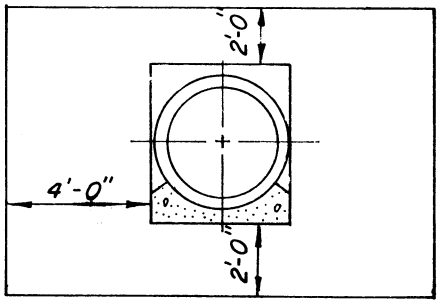

TABLE J-E9

QUANTITY SURVEY ANTI-SEEP COLLARS TYPE B1 BEDDING
FOR DAMS CLASS (a) LESS THAN 50 FEET HIGH
(per collar)

Conduit Inside Diameter	Reinforcing Steel	Type of Conduit		
		ASTM C-76 ASTM C-361 ASTM C-302 (f'_c=6000 psi)	AWWA C-300 AWWA C-302 (f'_c=4500 psi)	AWWA C-301
		Concrete Volume		
inch	lb	cu yd	cu yd	cu yd
12	46.55	0.888	--	--
15	48.29	0.949	--	--
16	47.87	0.975	--	0.929
18	51.35	1.008	--	0.972
20	52.61	1.069	1.101	1.022
21	57.39	1.067	--	--
24	59.06	1.160	1.203	1.149
27	61.12	1.215	1.246	--
30	61.98	1.301	1.334	1.279
33	70.11	1.361	1.396	--
36	71.09	1.437	1.49	1.408
42	80.19	1.615	1.650	1.564
48	83.95	1.772	1.814	1.728
54	93.74	1.933	1.944	1.910
60	97.64	2.103	2.152	2.078

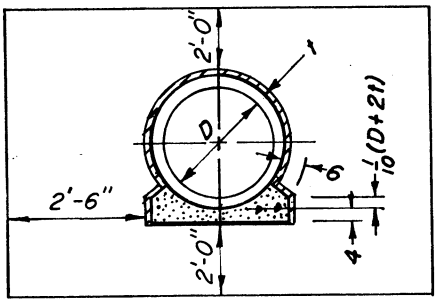

TABLE J-F1

QUANTITY SURVEY PWD BASIN

Structure Size	Conduit Inside Diameter	Reinforcing Steel	Type of Pipe		
			ASTM C-76 AWWA C-302	AWWA C-300 AWWA C-301 1/	Welded Steel & CMP
			Concrete Volume		
	inch	lb	cu yd	cu yd	cu yd
A	8	54	--	--	0.73
B	10	76	--	--	1.01
	12	76	.99	--	1.01
C	12	148	1.94	--	1.96
	15	148	1.93	--	1.95
	18	148	1.92	1.91	1.94
D	18	274	3.67	3.67	3.70
	20	274	--	3.65	3.68
	21	274	3.65	--	3.67
	24	274	3.63	3.63	3.66
	27	274	3.61	--	3.64
E	30	447	7.32	7.31	7.36
	33	447	7.30	--	7.34
	36	447	7.26	7.24	7.31
F	36	742	14.78	14.79	14.86
	42	742	14.72	14.70	14.82
	48	742	14.62	14.60	14.75
G	48	2364	25.72	25.69	25.88
	54	2364	25.60	25.56	25.80
	60	2364	25.41	25.41	25.70
H	60	3373	40.73	40.73	40.99
	66	3373	40.56	40.56	40.86
	72	3373	40.36	40.36	40.72

1/ AWWA C-301 ordinarily not available in diameters less than 42".

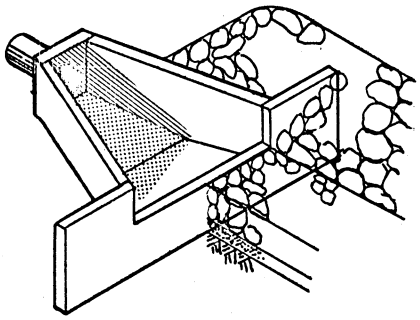

TABLE J-F2

QUANTITY SURVEY IMPACT BASIN *

Structure Size	Conduit Inside Diameter	Reinforcing Steel	Type of Pipe		
			ASTM C-76 AWWA C-302	AWWA C-300 AWWA C-301	Welded Steel & CMP
			Concrete Vol.		
	in.	lb	cu yd	cu yd	cu yd
B	12	348	3.82	--	3.34
	15	"	3.79	--	3.82
	18	"	3.76	--	3.80
	21	"	3.71	3.75 **	3.77
C	15	481	6.26	--	6.29
	16	""	--	6.28	6.28
	18	"	6.22	6.21	6.26
	20	"	--	6.18	6.24
	21	"	6.18	--	6.23
	24	"	6.13	6.12	6.20
	27	"	6.08	--	6.16
D	18	607	8.89	8.88	8.95
	20	"	--	8.84	8.91
	21	"	8.85	--	8.90
	24	"	8.80	8.76	8.86
	27	"	8.75	--	8.82
	30	"	8.69	8.66	8.78
E	21	946	11.30	--	11.36
	24	"	11.25	11.21	11.32
	27	"	11.20	--	11.28
	30	"	11.14	11.10	11.23
	33	"	11.08	--	11.18
	36	"	11.00	10.96	11.12
F	24	2374	19.21	19.17	19.29
	27	"	19.15	--	19.24
	30	"	19.08	19.04	19.19
	33	"	19.01	--	19.13
	36	"	18.93	18.88	19.07
	42	"	18.73	18.68	18.92
	48	"	18.51	18.45	18.76

TO BE REPLACED

* Minimum wing wall length.

** Prestressed (AWWA C301) pipe only.

TABLE J-F2 (continued)

Structure Size	Conduit Inside Diameter	Reinforcing Steel	Type of Pipe		
			ASTM C-76 AWWA C-302	AWWA C-300 AWWA C-301	Welded Steel & CMP
			Concrete Vol.		
	in.	lb	cu yd	cu yd	cu yd
G	27	2944	23.72	--	23.81
	30	"	23.65	23.61	23.75
	33	"	23.57	--	23.63
	36	"	23.49	23.45	23.63
	42	"	23.29	23.24	23.49
	48	"	23.07	23.01	23.32
	54	"	22.83	22.75	23.13
H	36	5920	39.56	39.51	39.71
	39	"	39.45	--	39.63
	42	"	39.34	39.29	39.55
	48	"	39.09	39.03	39.47
	54	"	--	38.74	39.26
	60	"	--	38.41	39.06
I	42	8755	68.45	68.39	68.68
	48	"	68.20	68.13	68.48
	54	"	67.82	67.82	68.26
	60	"	67.48	67.48	68.02
	66	"	67.10	67.10	67.75
	72	"	66.68	66.68	67.45

TO BE REPLACED