U. S. Department of Agriculture
Soil Conservation Service
Engineering Division

Technical Release No. 30
Design Unit
April 1, 1965

STRUCTURAL DESIGN OF STANDARD COVERED RISERS

PREFACE

This Technical Release presents the criteria and procedures established for the structural design and detailing of Standard Covered Risers. Various criteria and proportions of drop inlet spillways were selected at a meeting of the "Subcommittee on Standard Structural Details" held in Spartanburg, South Carolina, during October 23-27, 1961. Additional criteria, together with procedures for the structural design of Standard Covered Risers, developed as a result of the Subcommittee's meeting were reviewed at a meeting of Engineering and Watershed Planning Unit Design Engineers held in Washington, D. C., during May 20-24, 1963. A revised edition of "Criteria and Procedures for the Structural Design of Standard Covered Risers", dated April 1, 1964, was then sent to the Engineering and Watershed Planning Unit Design Engineers for their use, review and comment. This Technical Release is an outgrowth of the preceding meetings and reviews.

Criteria and procedures used in the preparation of standards should be selected to insure applicability to the widest practical range of site conditions. This philosophy was used in preparing this Technical Release. Much of the material contained herein either applies directly, or may be adapted readily, to risers of types other than the Standard Covered Risers.

Mr. Edwin S. Alling developed most of the procedures for structural design presented herein. This Technical Release was prepared by Mr. Alling and other personnel of the Design Unit, Design Branch, Engineering Division at Hyattsville, Maryland.

TECHNICAL RELEASE

NUMBER 30

STRUCTURAL DESIGN OF STANDARD COVERED RISERS

Contents | Page

PREFACE

NOMENCLATURE

CHAPTER 1. CRITERIA

Standard Proportions, Details, and Data	1-1
Limitations on the Use of the Standard Plans	1-1
Riser Heights	1-1
Pipe Velocities	1-1
Ice Conditions	1-1
Allowable Stresses and Bearing Pressures	1-2
Concrete	1-2
Reinforcing Steel	1-2
Earth Bearing Pressures	1-2
Loads	1-2
Loads on Riser Walls	1-2
Lateral soil pressures	1-2
Water pressures during pipe flow	1-3
Composite wall pressure diagram for design	1-4
Loads on Cover Slab	1-5
Embankment Load on Riser	1-5
Wind	1-6
Flotation Criteria	1-6
Location of Construction Joints in Riser Walls	1-6

CHAPTER 2. METHODS OF ANALYSIS AND DESIGN PROCEDURES

Cover Slab Walls	2-1
Cover Slab	2-1
Riser Walls, Horizontal Bending	2-3
Closed Sections	2-3
Equilibrium relations	2-3
Analysis for corner moments, M_K	2-5
Members are prismatic	2-5
Members are non-prismatic	2-8
Design approach	2-10
Considerations	2-10
Direct design by charts	2-11
Wall thickness and steel selection	2-15
Sections at Low Stage Inlet(s)	2-15

Contents

	Page
Sections at the Conduit Entrance	2-15
Riser Walls, Vertical Bending	2-18
Wall-to-Footing Connection	2-18
Vertical flexure in sidewalls	2-18
Vertical flexure in endwalls	2-21
Evaluation of coefficients K_y	2-22
Example of computation of M_{VO} and V_{VO}	2-26
Wall thickness by shear due to vertical bending	2-27
Vertical steel	2-27
Division of wall loading	2-27
Wall Thickness Change Locations	2-28
Provision for Moment from Embankment Loading	2-28
At closed sections	2-28
At conduit entrance	2-29
Stability Analyses	2-30
Riser in the Reservoir Area	2-31
Riser in the Embankment	2-32
Footing Strength Design	2-32

CHAPTER 3. EXAMPLE DESIGN

Riser Data	3-1
Cover Slab and Cover Slab Walls	3-1
Riser Wall Loading	3-2
Design of Riser Walls	3-2
Wall Thickness at Wall-to-Footing Connection	3-2
Design for Horizontal Bending	3-3
Vertical Steel at Wall-to-Footing Connection	3-6
Vertical Steel for Moment from Embankment Loading	3-7
Stability Analyses	3-8
Preliminaries	3-8
Analyses	3-10
Footing Strength Design	3-12
Projection Loadings	3-12
Design	3-12
Example Plans	3-14

Figures

Figure 1-1	Water pressures on riser walls during pipe flow.	1-3
Figure 1-2	Representation of heads during pipe flow.	1-4
Figure 1-3	Composite wall pressure diagram for design of standard risers ($v_{b(max.)} = 30$ fps).	1-5
Figure 2-1	Definition sketch of cover slab.	2-1
Figure 2-2	Cover slab and cover slab wall steel layout.	2-3
Figure 2-3	Definition sketch for horizontal bending.	2-4
Figure 2-4	Shear distribution assumed by usual theory.	2-7
Figure 2-5	Assumed variation in moment of inertia.	2-8
Figure 2-6	Typical direct design chart for Σo in horizontal bending.	2-12

Figures

		Page
Figure 2-7	Typical direct design chart for A_s in horizontal bending.	2-12
Figure 2-8	Steel layouts at closed horizontal sections of riser.	2-15
Figure 2-9	Suggested tabular form for design of closed sections for horizontal bending.	2-16
Figure 2-10	Layout of horizontal steel in sections at the conduit entrance.	2-17
Figure 2-11	Vertical section through sidewall.	2-18
Figure 2-12	Vertical section through endwall.	2-22
Figure 2-13	Sketches for analysis of pinned frame.	2-23
Figure 2-14	Pinned frame deflections.	2-25
Figure 2-15	Vertical steel at wall-to-footing connection.	2-27
Figure 2-16	Typical load division curve.	2-28
Figure 2-17	Assumed embankment loading.	2-29
Figure 2-18	Analysis of bearing pressures.	2-30
Figure 2-19	Moment in footing due to vertical bending.	2-32
Figure 3-1	Direct design chart for horizontal bending, D = 30 in.	3-4
Figure 3-2	Plan of trial footing.	3-9

Tables

Table 2-1	Cover slab design summary.	2-2
Table 2-2	Cover slab and cover slab wall steel.	2-3
Table 2-3	Force coefficients for horizontal bending , n.	2-5
Table 2-4	Moment coefficients assuming prismatic members, concentrated reactions, and using the PCA moment corrections - not to be used for design.	2-8
Table 2-5	Data for analyses with non-prismatic members.	2-9
Table 2-6	Moment coefficients for horizontal bending, m.	2-10
Table 2-7	Data for preparation of direct design charts for horizontal bending.	2-13
Table 2-8	Values of functions.	2-21
Table 2-9	Pinned frame corner moments and deflection coefficients.	2-24
Table 3-1	Summary of riser wall design for horizontal bending.	3-5
Table 3-2	Vertical steel for moment from embankment loading at usual closed sections.	3-7

NOMENCLATURE

A = area of footing; equivalent area of reinforcing steel

A_s = area of reinforcing steel

a = ratio used to obtain properties of non-prismatic members; area of flow

a_b = area of the conduit

a_r = area of the riser

B = "weighted" width of riser endwall

b = width of reinforced concrete member

C = carry-over factor

c = distance from center of gravity axis to extreme fiber

D = pipe conduit diameter

d = effective depth of reinforced concrete member

d'' = $d - t/2$

E = modulus of elasticity

e = base of Naperian logarithms = 2.7183 - - -

F = force

f_c = compressive stress in concrete

fps = foot per second

f_s = tensile stress in reinforcing steel

H = head

H_h = head over crest of the covered inlet of the riser

h_s = depth of embankment or sediment at the riser at the section h_x below the crest of the covered inlet

h_{vr} = velocity head in the riser

h_w = inward pressure on riser wall in feet of water

h_x = distance from crest of covered inlet to point under consideration

I = second moment of area, moment of inertia

j = ratio used in reinforced concrete relations

K = ratio of lateral soil pressure to vertical soil pressure

K_y = horizontal deflection coefficient

k = kip, thousand pounds; stiffness coefficient

klf = kips per lineal foot

ksf = kips per square foot

ksi = kips per square inch

L = length; span length, c.c. of supports

M = moment

M^F = fixed end moment

M_s = equivalent moment

M_{VO} = vertical moment in the riser wall at the wall-to-footing connection

M_{VX} = vertical moment in the riser wall at section under consideration

m = moment coefficient

N_E = direct compressive force in the riser endwall

N_{GR} = sum of vertical forces, but not including uplift

N_{ih} = vertical distance from pipe invert at the riser to crest of the covered inlet of the riser

N_{is} = vertical distance from pipe invert at the riser to soil surface. The soil surface may be either the sediment or the embankment (berm) surface.

N_O = direct vertical compressive force at the wall-to-footing connection

N_S = direct compressive force in the riser sidewall

N_{sh} = vertical distance from the soil surface to the crest of the covered inlet of the riser

n = modular ratio; force coefficient

p = soil bearing pressure; pressure per unit area

pcf = pounds per cubic foot

psf = pounds per square foot

psi = pounds per square inch

p_t = temperature and shrinkage steel ratio in reinforced concrete

q = unit load; uniformly distributed load

q_{HX} = the unit load resisted by horizontal bending at the section under consideration

q_{VX} = the unit load resisted by vertical bending at the section under consideration

q_X = the total unit load at the section under consideration

R = redundant force

S = stiffness; spacing of reinforcing steel

T&S = temperature and shrinkage

t = thickness; riser wall thickness

t_f = footing thickness

u = bond stress in concrete

V = total shear; volume

V_{VO} = shear in the riser wall at the wall-to-footing connection due to vertical bending

V_{VX} = shear in the riser wall at the section under consideration due to vertical bending

v = shear stress in concrete; velocity of flow

v_b = mean velocity of flow in the conduit

v_r = mean velocity of flow in the riser

W = width of footing in the direction of M; weight

w = unit weight, unit weight of water

w_b = buoyant unit weight of soil

w_m = moist unit weight of soil

w_s = saturated unit weight of soil

X = distance from the wall-to-footing connection to the section under consideration

Y = horizontal deflection of the riser wall at the section under consideration

β = $(\frac{1}{4K_yD^4})^{1/4}$

λ = distribution factor

Σo = perimeter of reinforcing steel

TECHNICAL RELEASE

NUMBER 30

STRUCTURAL DESIGN OF STANDARD COVERED RISERS

CHAPTER 1. CRITERIA

Standard Proportions, Details, and Data

Refer to Engineering Standard Drawing ES-150, "Drop Inlet Spillways, Standard for Covered Top Riser", and to Technical Release No. 29 "Hydraulics of Two-way Covered Risers". Structural detail drawings shall conform with practice as shown in the latest edition of "Manual of Standard Practice for Detailing Reinforced Concrete Structures" by ACI Committee 315.

Limitations on the Use of the Standard Plans

Riser Heights

For the purpose of developing and presenting the standard risers, the following vertical distances are defined:

N_{ih} = vertical distance from pipe invert at the riser to crest of the covered inlet of the riser

N_{is} = vertical distance from pipe invert at the riser to soil surface. The soil surface may be either the sediment or the embankment (berm) surface.

N_{sh} = vertical distance from the soil surface to the crest of the covered inlet of the riser.

The standard risers shall be designed using 5 ft increments and combinations of N_{ih} and N_{is}. N_{sh} shall not exceed 20 ft, N_{is} shall not exceed 35 ft, and N_{ih} shall not exceed 40 ft nor be less than 3D.

Pipe Velocities

The maximum allowable mean velocity in the pipe conduit of standard risers is $v_{b(max)} = 30$ fps. If the velocity must exceed 30 fps at an actual site, the riser to be used, particularly the elbow section, should be treated as a special design.

Ice Conditions

Ice pressures are highly indeterminate, therefore the standard risers shall not be designed for ice loads. Where ice of considerable thickness can occur, the riser should be located in the embankment at a berm, thus eliminating ice pressures.

Allowable Stresses and Bearing Pressures

Concrete

Class 4000 concrete shall be assumed in the design of the standard risers. Allowable concrete stresses and other criteria shall be in accordance with National Engineering Handbook, Section 6, sub-section 4., Reinforced Concrete (9-64 revision) except as modified in the following notes:

(1) As a design convenience, constant allowable bond stresses shall be used for all bar sizes ≤ #7, these are:

tension top bars, $u = 245$ psi
all other tension bars, $u = 350$ psi

(2) Shear stress, as a measure of diagonal tension, shall be limited so that web steel is not required.

(3) Minimum thickness of cover slab is 8 in.

(4) Minimum thickness of riser walls is 10 in.

(5) Wall thickness increments shall not exceed 3 in.

Reinforcing Steel

Intermediate grade steel shall be assumed in the design of the standard risers. Allowable steel stresses and other criteria shall be in accordance with NEH-6, sub-section 4., Reinforced Concrete (9-64 revision) except that the minimum steel ratio for principal steel and for temperature and shrinkage steel shall be $p_t = 0.002$ in each face in each direction, thicknesses greater than 16 inches shall be considered as 16 inches.

Earth Bearing Pressures

The allowable bearing values given are the allowable excess pressures over the pressure which would exist at the elevation of the bottom of the footing if the riser were not present.

(1) Saturated foundation:

Allowable average excess pressure = 1,000 psf
Allowable maximum excess pressure = 2,000 psf

(2) Moist foundation

Twice the above values.

In no case shall the line of action of the reaction lie without the middle third of the base. The loading conditions to be investigated are listed under "Stability Analyses".

Loads

Loads on Riser Walls

The design of horizontal and vertical sections of riser walls must consider both lateral soil pressure and water pressure loadings.

Lateral soil pressures. - For the design of the riser walls, lateral soil pressures shall be assumed uniformly distributed around the riser and $Kw_b = 45$ pcf where K = the ratio of lateral to vertical soil pressures and w_b = buoyant unit weight of soil.

Water pressures during pipe flow. - The loading on the riser wall during pipe flow is equal to the difference between the pressures on the exterior and interior sides of the wall as illustrated in Figure 1-1.

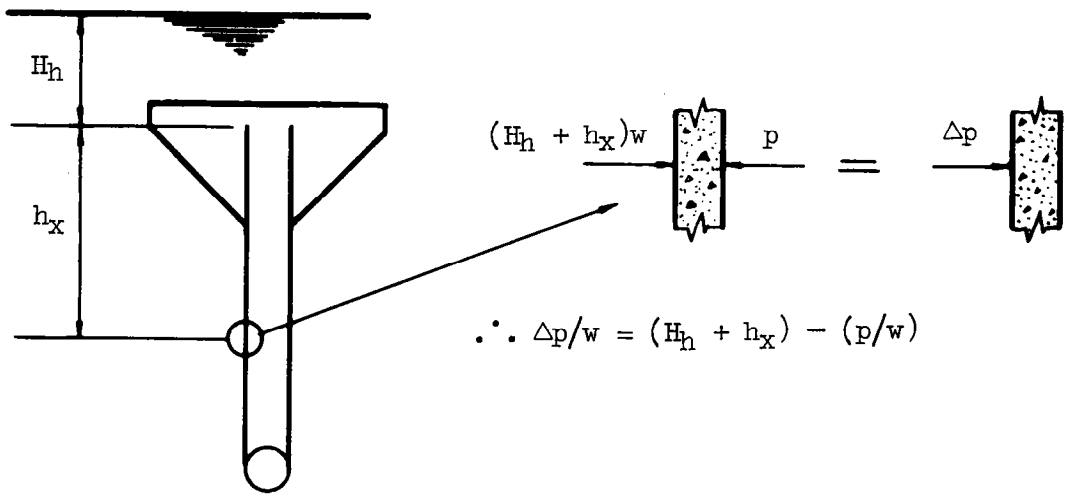

Figure 1-1. Water pressures on riser walls during pipe flow.

Tests on risers of the standard proportions show that the pressure difference may be taken as $\frac{\Delta p/w}{h_{vr}} = 6.0$ from the crest of the covered inlet of the riser to a distance equal to 1.5D below the crest and the pressure difference is $\frac{\Delta p/w}{h_{vr}} = 3.0$ below distance 1.5D below the crest, where h_{vr} is the velocity head in the riser.

For $v_b(max) = 30$ fps:

$$v_r = (a_b/a_r)v_b = (\frac{\pi D^2}{4}/3D^2)v_b = v_b/3.82$$

$$= 30/3.82 = 7.85 \text{ fps}$$

$$h_{vr} = (v_r)^2/2g = (7.85)^2/2g = 0.96 \text{ ft}$$

Thus,

$$\Delta p/w = 6.0 \times 0.96 = 5.76 \text{ ft}$$

and

$$\Delta p/w = 3.0 \times 0.96 = 2.88 \text{ ft}$$

where v_r = mean velocity of flow in the riser

a_r = area of the riser

a_b = area of the conduit

For design, use $\Delta p/w = 6.0$ ft and 3.0 ft respectively.

Figure 1-2 illustrates a method of representing the various heads involved during pipe flow. Note that negative pressures (below atmospheric) are possible at and near the crest of the riser. The maximum possible magnitude of these negative pressures is about:

$$(6\ h_{vr} - 0.5D)62.4 \approx 300 \text{ psf for } D = 24 \text{ in.}$$

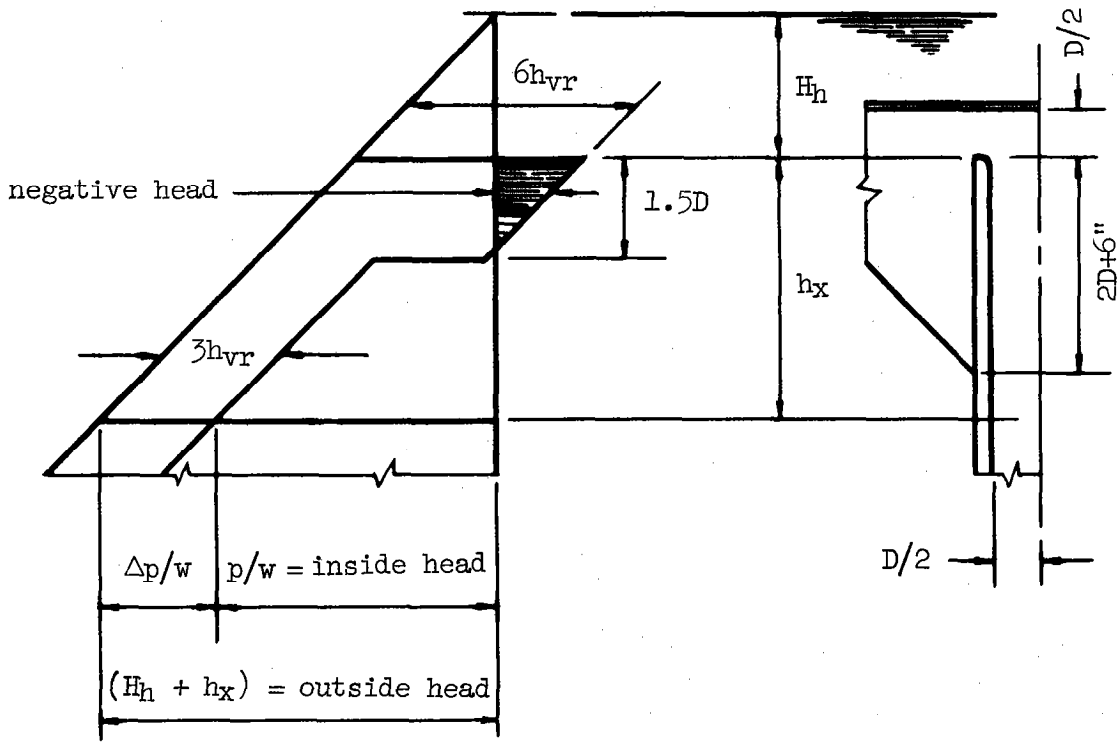

Figure 1-2. Representation of heads during pipe flow.

<u>Composite wall pressure diagram for design</u>. - For design purposes, two loading conditions are defined:

(1) pipe flow - pressures as described above,

(2) no flow - water surface at the crest of the covered inlet of the riser, lower inlets, if any, assumed plugged.

These two conditions may be combined and a composite diagram drawn as illustrated in Figure 1-3. The resulting diagram will contain , when $N_{sh} > 6$, three straight lines given by:

(1) $h_w = 6.0$ for $0 \leq h_x \leq 6.0$

(2) $h_w = h_x$ for $6.0 \leq h_x \leq N_{sh}$

(3) $h_w = h_x + 0.72\ h_s$ for $N_{sh} \leq h_x \leq N_{ih}$

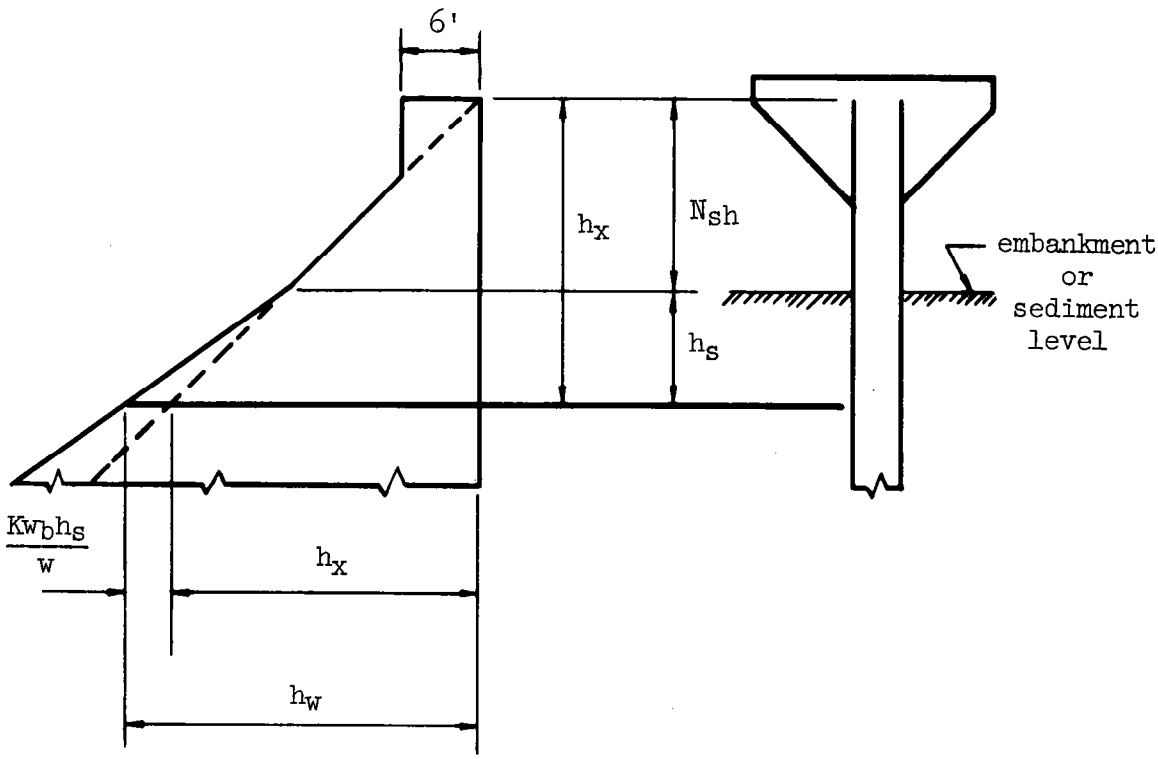

Figure 1-3. Composite wall pressure diagram for design of standard risers ($v_{b(max)}$ = 30 fps).

where

h_w = inward pressure on riser wall in feet of water

h_x = distance from crest of covered inlet to point under consideration

h_s = depth of embankment or sediment at the riser to the section h_x below the crest of the covered inlet

N_{sh} and N_{ih} as previously defined.

Note that $\Delta p/w$ = 6.0 ft has been used to a distance of 6.0 ft below the crest of the covered inlet, and that 0.72 is obtained from Kw_b/w = 45/62.4 = 0.72.

Loads on Cover Slab

The cover slab live load shall be 100 psf. The weight of any equipment to be installed on the cover slab shall be incorporated in a special design.

Embankment Load on Riser

For stability analyses and to check the vertical steel required in the downstream endwall, it shall be assumed, for risers located in the embankment, that the difference between the downstream and the upstream lateral earth pressures is Kw_m = 50 pcf on the downstream endwall for

moist conditions and is Kw_b = 30 pcf for saturated conditions.

A triangular pressure distribution shall be used, but the resultant force shall be assumed to act at mid-height instead of at third-height of h_s to account for possible "arching effect".

Take the unit soil weights for moist or saturated conditions as $w_m = w_s$ = 140 pcf. Neglect friction which may act on the side-walls.

Wind

Risers located in the reservoir area shall be designed for wind acting over the entire sidewall using 50 pounds per square foot pressure.

Risers located in the embankment shall not be designed for wind. However, the catalog of available standard risers, when prepared, will specify a maximum allowable wind projection. This wind projection is the vertical distance between the surface of the backfill and the top of the riser at any stage of construction.

Flotation Criteria

(1) When the riser is located in the reservoir area, the ratio of the weight of the riser to the weight of the volume of water displaced by the riser shall not be less than 1.5. Low stage inlet(s), if any, shall be assumed plugged for this computation.

(2) When the riser is located in the embankment - same as (1), but add to the weight of the riser, the buoyant weight of the submerged fill over the riser footing projections. Take the buoyant unit weight as w_b = 50 pcf.

Location of Construction Joints in the Riser Walls

The first construction joint above the top of the footing shall be D + 12 inches above the pipe invert at the conduit entrance. The distance between the first and second, and all other pairs of construction joints below the topmost joint in the riser walls shall be 5 ft except that the distance between the topmost and the next to the topmost joint shall be 4 ft for risers having D = 36 in. The topmost construction joint in the riser walls shall be 7.0, 6.5, 7.0, 10.5, and 10.0 ft below the crest of the covered inlet of the riser for risers having D = 24, 30, 36, 42, and 48 in. respectively.

The distance between the first and second construction joints above the top of the footing shall be left blank on the standard plans. The blank distance makes it possible to adapt the plans for a specific standard riser to a range of heights. This adaptability of the standard plans imposes that there can not be a change in wall thickness at the second construction joint.

CHAPTER 2. METHODS OF ANALYSIS AND DESIGN PROCEDURES

Cover Slab Walls

The cover slab walls support the cover slab, acting as variable depth cantilever beams. In the top portion of the riser, the riser walls will be 10 in. thick (the minimum thickness). Thus, to avoid steel placement difficulties, the cover slab walls will also be made 10 in. thick. With 10 in. walls, #5 @ 15" c.c. are required in each face to give

$$p_t = \frac{0.25}{120} = 0.0021 \geqq 0.002.$$

With this wall thickness and amount of steel, rough computations will show that further analysis is unnecessary.

Cover Slab

The minimum thickness of the cover slab is 8 in., this is an adequate thickness for all D values. The total loading is 200 psf (100 psf live + 100 psf dead). Cover slab span is 3D + 10 in. c.c. of supports with 10 in. walls. Thus, the cover slab need be designed only once for each conduit size D. (The only exception to this might occur in the case of short risers which require additional wall thickness to satisfy the flotation criteria — in which event the procedures given below can be suitably modified.)

Moments in the cover slab are highly indeterminate. Therefore, the positive center moments shall be conservatively taken as $1/8\ qL^2$. Negative moments shall not be computed, but negative steel in the amounts required for T & S (temperature and shrinkage) shall be provided and shall be lapped with the outside T & S cover slab wall steel. A construction joint shall be provided in the cover slab walls at the elevation of the high stage crest.

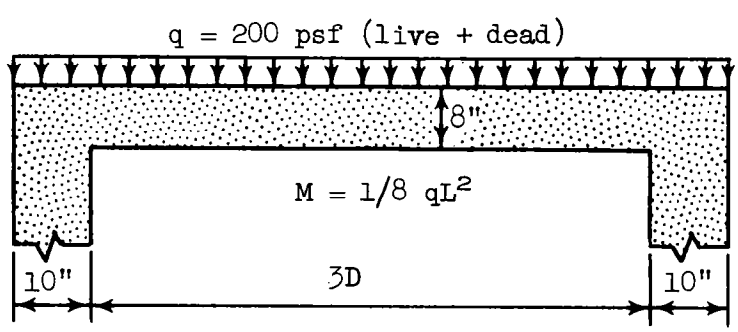

Figure 2-1. Definition sketch of cover slab.

The cover slab design follows from a consideration of Figure 2-1:

$$d = 8 - 2.5 = 5.5 \text{ in.}$$

$$A_{s(min)} = 0.002 \times 8 \times 12 = 0.192 \text{ sq in./ft}$$

$$\#4 @ 12 = 0.20 \text{ sq in./ft}$$

$$\#5 @ 15 = 0.25 \text{ sq in./ft}$$

$$V_{max} = 1.50\ qD = 1.50 \times 200 \times D/12 = 25D \text{ lbs/ft}$$

$$v_{max} = \frac{V_{max} - qd}{bd} = \frac{25D - 200(5.5/12)}{12 \times 5.5} = 0.379D - 1.4 \text{ psi}$$

$$\Sigma o = \frac{V_{max}}{ujd} = \frac{25D}{350 \times 7/8 \times 5.5} = D/67.3 \text{ in./ft}$$

$$M = 1/8 \times 0.200\left(\frac{3D + 10}{12}\right)^2 = 0.0001735(3D + 10)^2 \text{ ft kips/ft}$$

A_s may be determined directly from ES-164, sheet 1 of 3.

Table 2-1. Cover slab design summary.

D, inches	24	30	36	42	48
v_{max}, psi	7	10	12	14	17
Σo req'd., in./ft	0.36	0.45	0.54	0.62	0.71
M, ft kips/ft	1.2	1.7	2.4	3.2	4.1
A_s req'd., sq in./ft	0.19	0.20	0.29	0.39	0.50
Steel selected	#4@12	#4@12	#4@8	#4@6	#5@7 1/2

The cover slab layout is shown in Figure 2-2 and the cover steel selected is tabulated in Table 2-2. The layout must be modified locally near the 30 in. diameter manhole in the cover slab.

Table 2-2. Cover slab and cover slab wall steel.

CW1, CW2, CW3, CW4 = #5@15					
D	24	30	36	42	48
CS5	#4@12	#4@12	#4@8	#4@6	#5@7 1/2
CS6 = #5@15					
CS7, CS8 = #4@12					

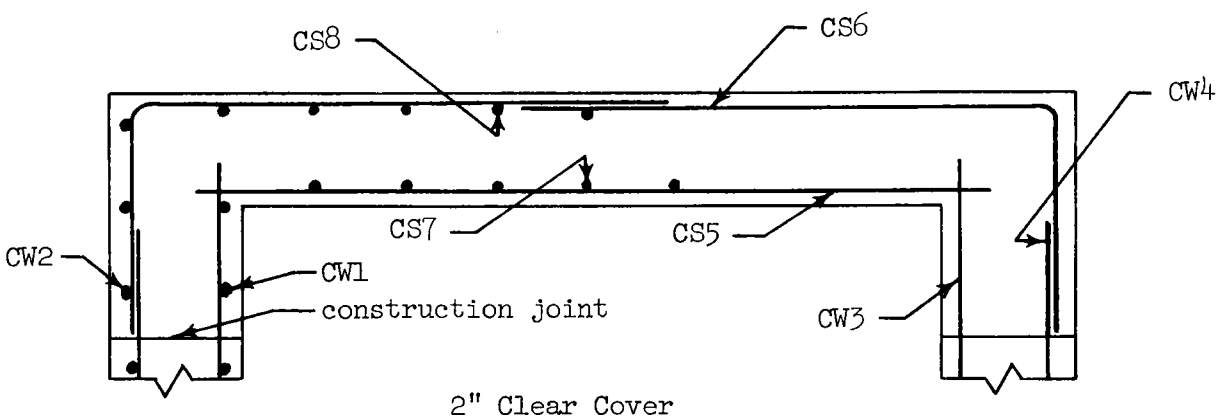

Figure 2-2. Cover slab and cover slab wall steel layout.

Riser Walls, Horizontal Bending

Closed Sections

For overall economy the sidewalls and endwalls shall have the same thickness at any horizontal section. Since equal thicknesses are used, moments and direct compressive forces can be expressed conveniently as functions of t/D. Figure 2-3 shows the various moments and forces of interest.

Equilibrium relations. - The relations for the compressive forces can be written directly from a consideration of statics as:

$$N_E = 1/2\ q(3D + 2t) \qquad N_{E/qD} = 1/2\ (3 + 2t/D)$$

$$N_S = 1/2\ q(D + 2t) \qquad N_{S/qD} = 1/2\ (1 + 2t/D)$$

$$N_K = 0.707(N_E + N_S) \qquad N_{K/qD} = 1.414\ (1 + t/D)$$

$$= 1.414\ q(D + t)$$

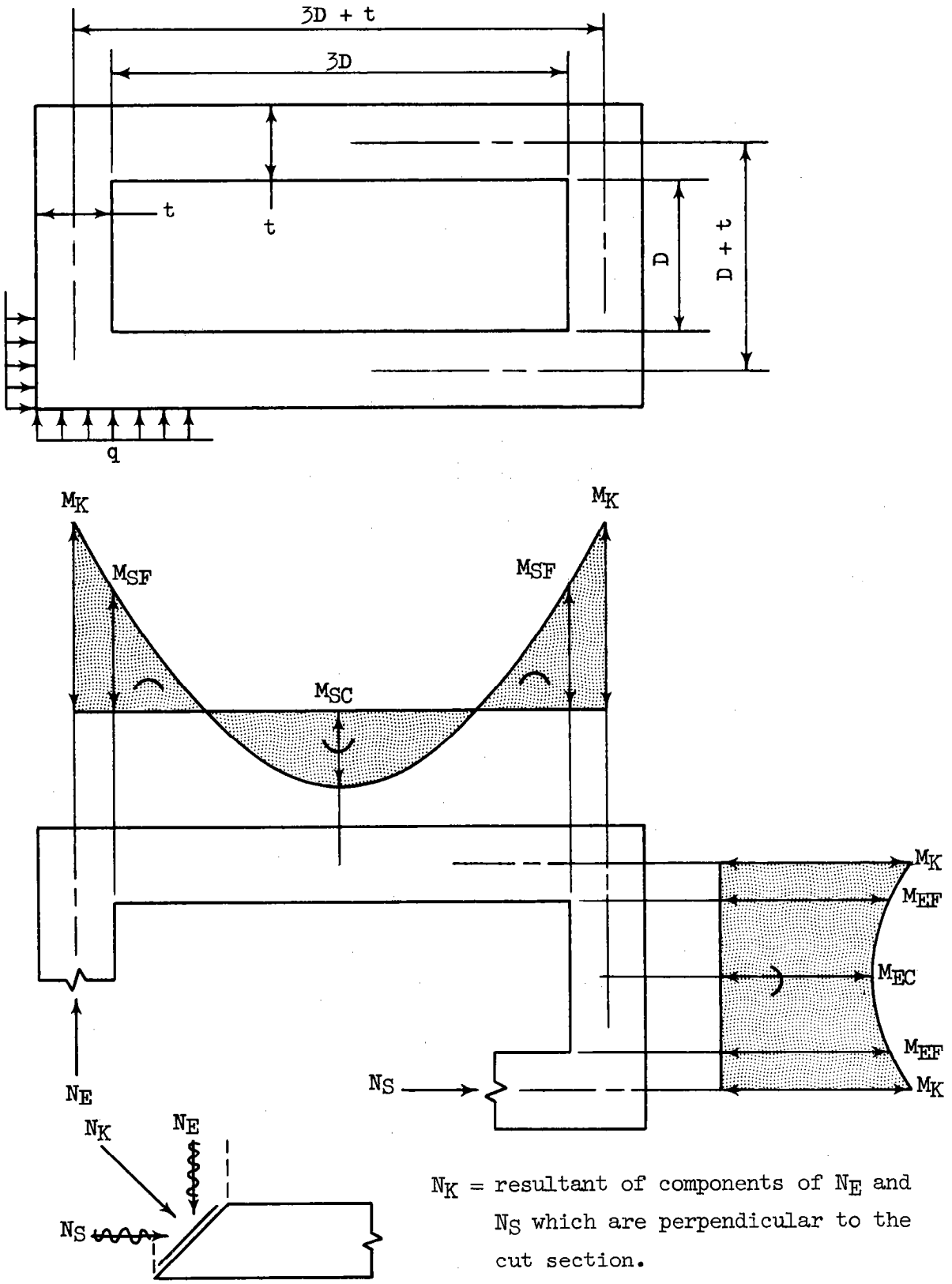

Figure 2-3. Definition sketch for horizontal bending.

These relations together with the shear in the sidewall at the face of the endwall are summarized in Table 2-3.

Table 2-3. Force coefficients for horizontal bending, n.

t/D	0.00	0.25	0.50	0.75	1.00
N_S	0.50	0.75	1.00	1.25	1.50
N_E	1.50	1.75	2.00	2.25	2.50
N_K	1.41	1.77	2.12	2.48	2.83
V_{SF}	1.50	1.50	1.50	1.50	1.50

$$N_i \text{ or } V_i = n_i qD$$

The relations for the various moments can also be written from a consideration of statics, however M_K must be known before the relations can be evaluated.

The relations are:

$$M_{SC} = \frac{1}{8} q(3D + t)^2 - M_K \qquad \frac{M_{SC}}{qD^2} = \frac{1}{8}(3 + t/D)^2 - \frac{M_K}{qD^2}$$

$$M_{SF} = \frac{1}{8} q(3D)^2 - M_{SC} \qquad \frac{M_{SF}}{qD^2} = 1.125 - \frac{M_{SC}}{qD^2}$$

$$M_{EC} = M_K - \frac{1}{8} q(D + t)^2 \qquad \frac{M_{EC}}{qD^2} = \frac{M_K}{qD^2} - \frac{1}{8}(1 + t/D)^2$$

$$M_{EF} = M_{EC} + \frac{1}{8} q(D)^2 \qquad \frac{M_{EF}}{qD^2} = \frac{M_{EC}}{qD^2} + 0.125$$

Note that the expressions for M_{SC} and M_{EC} assume, in common with most structural analyses, the support reactions for any member are concentrated at the support centerlines.

Analysis for corner moments, M_K. - Thought should be given to the effects of the assumptions used in analyzing for moments. Any reasonable method of analysis may be employed (as Moment Distribution, Slope Deflection, Conjugate Structure, etc.) but the results may vary widely depending on the assumptions followed. The effects of using two basically different assumptions are presented below.

Moment Distribution is used as the method of analysis because of its simplicity due to symmetry of both loading and shape.

Members are prismatic. - - The basic assumption is: the members of the closed frame are prismatic. Under this assumption, one cycle of Moment Distribution results in final values for M_K, since together with symmetry of loading and shape, the sidewall and endwall carry-over factors

are equal. Thus M_K is given by:

$$M_K = M_S^F - \lambda_S (M_S^F - M_E^F)$$

or

$$M_K = M_E^F + \lambda_E (M_S^F - M_E^F)$$

where M^F = fixed end moment, and

λ = distribution factor.

In the above equations, substitute magnitudes only, signs are already adjusted. The distribution factors are determined from:

$$S = \text{stiffness} = \frac{4EI}{L} \propto \frac{1}{L}$$

so

$$S_S \propto \frac{1}{3D + t} \quad \text{and} \quad S_E \propto \frac{1}{D + t}$$

or

$$S_S \propto \frac{1}{3 + t/D} \quad \text{and} \quad S_E \propto \frac{1}{1 + t/D}$$

thus

$$\lambda_S = \frac{S_S}{S_S + S_E} \quad \text{and} \quad \lambda_E = \frac{S_E}{S_S + S_E}$$

The fixed end moments may be written as:

$$M_S^F = \frac{1}{12} q(3D + t)^2 \text{ and } M_E^F = \frac{1}{12} q(D + t)^2$$

Note that these expressions, along with those for M_{SC} and M_{EC}, assume the support reactions are concentrated at the support centerlines.

Observe that even if the assumption of prismatic members was correct, values for moments obtained from the above analysis would be incorrect. The moment values would be incorrect because beam reactions are not concentrated at support centerlines. The reactions are in reality distributed in some unknown way over the thickness of the member providing the support. If the reaction (and hence shear) distribution were known, it would be possible to compute correct values for M^F from which correct values of M_K could be obtained. Similarly with the shear distribution known, correct expressions for M_{SC} and M_{EC} could be written. Since the shear distribution is not known, the following approximate procedure is sometimes advocated to obtain better values of moments.

Figure 2-4 shows the shear distribution assumed by usual theory. The moment at the face of the support using usual theory would be:

$$M_F = M_K - \Delta M \quad \text{where} \quad \Delta M = V_A(t/2).$$

The Portland Cement Association in its "Continuity in Concrete Building Frames" (page 28), would give the moment at the face as:

$$M_F = M_K - \Delta M_{PCA} \quad \text{where} \quad \Delta M_{PCA} \approx V_A(t/3).$$

The difference in ΔM values is:

$$\delta(\Delta M) \approx V_A(t/2) - V_A(t/3) = V_A(t/6)$$

Thus, the PCA moment correction is $V_A(t/6)$.

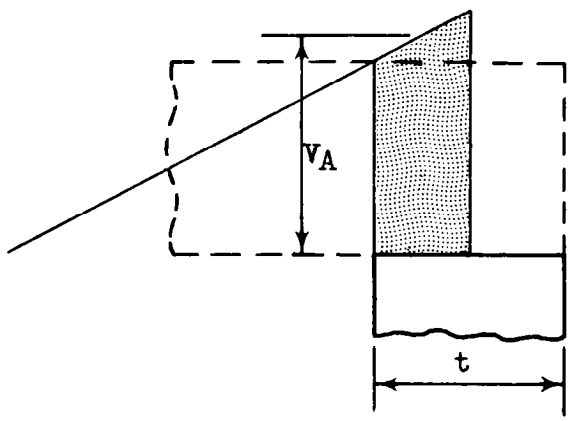

Figure 2-4. Shear distribution assumed by usual theory.

Or, for the sidewalls:

$$\delta(\Delta M)_S/qD^2 = \frac{t}{6D}\left(\frac{3}{2} + \frac{t}{4D}\right)$$

And, for endwalls:

$$\delta(\Delta M)_E/qD^2 = \frac{t}{6D}\left(\frac{1}{2} + \frac{t}{4D}\right)$$

The procedure using these moment corrections would then be: (1) compute M_K, etc. using the assumptions of prismatic members and concentrated reactions, (2) add these moment corrections to negative moments and subtract them from positive moments. Many engineers, however, would not reduce the positive moments. Table 2-4 gives the moment coefficients obtained by use of the above procedure. These values are given for purposes of comparison only, <u>they shall not be used in the design of standard covered risers</u>.

Table 2-4. Moment coefficients assuming prismatic members, concentrated reactions, and using the PCA moment corrections - not to be used for design.

t/D	0.00	0.25	0.50	0.75	1.00
M_K	0.58	0.67	0.77	0.88	1.00
M_{SF}	0.58	0.54	0.50	0.45	0.41
M_{SC}	0.54	0.58	0.62	0.67	0.71
M_{EF}	0.58	0.62	0.66	0.71	0.75
M_{EC}	0.46	0.50	0.54	0.59	0.63

Moment coefficients are for M/qD^2

How well the PCA moment correction takes care of the error due to the assumption of concentrated reactions is not known. In any case, the error due to the assumption of prismatic members increases with the ratio of t/D. Since high ratios of t/D will occur in some risers, it is desirable that a more nearly correct analysis be employed.

Members are non-prismatic. - - The basic assumption is: the members of the closed frame are non-prismatic and have moments of inertia which approach infinity outside of the clear span limits. Figure 2-5 shows this variation in moment of inertia. The assumption of large values of moments of inertia outside of the clear span limits not only avoids the error due to the previous assumption of prismatic members, but it also reduces the error due to the assumption of concentrated reactions. The error due to the assumption of concentrated reactions is reduced because moments in regions of large moments of inertia have little influence on final moments in indeterminate structures, that is, M/I values in such regions approach zero. Therefore the PCA moment corrections should not be applied to the moments resulting from this analysis.

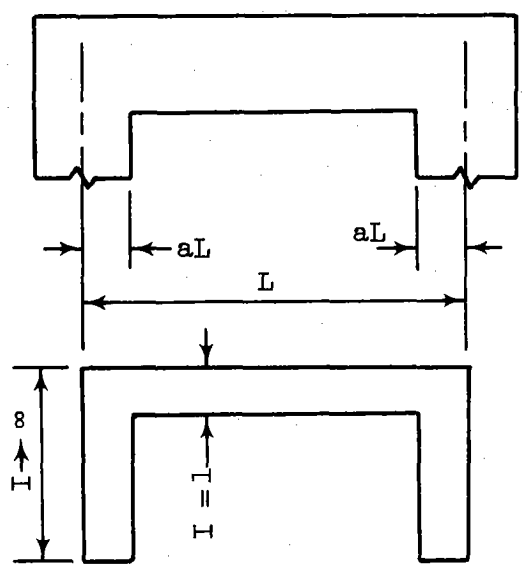

Figure 2-5. Assumed variation in moment of inertia.

Because the members are non-prismatic, the sidewall and endwall carry-over factors are not equal. Hence, the distribution of moments has to be performed. The required data is obtained as follows:

$$a_S L_S = t/2 \qquad\qquad a_E L_E = t/2$$

or

$$a_S = \frac{1}{\frac{6}{t/D} + 2} \quad \text{and} \quad a_E = \frac{1}{\frac{2}{t/D} + 2}$$

thus

C_i = carry-over factor where C_i = a function of a_i

S_i = stiffness = $k_i \frac{EI}{L_i} \propto \frac{k_i}{L_i}$ where k_i = a function of a_i

M_i^F = fixed end moment = $m_i^F q L_i^2$ where m_i^F = a function of a_i

Table 2-5 gives values of C, k, and m^F. It is obtained in part from page 23 of "Handbook of Frame Constants", by the PCA.

Table 2-5. Data for analysis with non-prismatic members.

a	Carry-over Factors	Stiffness Coefficient	Fixed end Moment Coefficient
	C	k	m^F
0.00	0.500	4.00	0.0833
0.05	0.575	5.23	0.0913
0.10	0.648	7.11	0.0983
0.15	0.719	10.17	0.1046
0.20	0.786	15.56	0.1100
0.25	0.846	26.00	0.1146

Again $\lambda_S = \frac{S_S}{S_S + S_E}$ and $\lambda_E = \frac{S_E}{S_S + S_E}$

Table 2-6 gives the moment coefficients obtained by use of the above procedure. <u>These values shall be used in the design of standard covered risers.</u>

Table 2-6. Moment coefficients for horizontal bending, m.

t/D	0.00	0.25	0.50	0.75	1.00
M_K	0.58	0.75	0.94	1.15	1.38
M_{SF}	0.58	0.55	0.53	0.51	0.50
M_{SC}	0.54	0.57	0.59	0.61	0.62
M_{EF}	0.58	0.68	0.78	0.89	1.00
M_{EC}	0.46	0.56	0.66	0.77	0.88

$$M_i = m_i q D^2$$

Design approach. - The process of design of closed sections of riser walls for horizontal bending can be reduced to a procedure which may be both quickly and accurately performed.

Considerations. - - Using equal thicknesses for sidewalls and endwalls, the minimum thickness is governed by shear stress (as a measure of diagonal tension) in the sidewalls [d] distance from the face of the endwalls. Since thickness is governed by shear, sections will be understressed in compression. Hence, T & S steel in the compression side of a section will not be counted upon as compressive steel, that is, the presence or absence of compressive steel has a negligible effect on the amount of tensile steel required in such a section.

The critical section for bond is in the sidewalls at the face of the endwall. Computations, using the coefficients for M_{SC} to locate the point of inflection in the sidewalls, show that the ratio of required perimeter of the (+) inside steel to the required perimeter of the (−) outside steel is:

$$\frac{(\Sigma o)+}{(\Sigma o)_-} = \frac{V_{PI}}{V_{SF}} \leq \frac{1.50 - 0.38}{1.50} = 0.745 \text{ for } t/D \leq 1.00$$

where V_{PI} is the shear at the point of inflection.

Comparisons of the coefficients for M_{SF} and M_{SC} for a given t/D value show (since N_S is the same for both moments):

$$A_{s_{SF}} \leq A_{s_{SC}} \text{ for } t/D \geq 0.17 \text{ (min. } t/D = \frac{10}{48} = 0.208)$$

Computations for $A_{s_{EF}}$ using M_{EF} and N_E, and computations for $A_{s_{SC}}$ using M_{SC} and N_S will show, for given values of h_w, t, and D:

$A_{s_{EF}} \geq A_{s_{SC}}$ for all t/D values, however the required steel areas do not differ significantly.

The corner, with M_K and N_K, is not critical if the negative steel is given the usual standard bend.

Direct design by charts. - - In the light of the preceding considerations, it is possible to construct charts which will permit the direct selection of wall thickness, steel areas, and steel perimeters for given wall loadings and conduit diameter.

t and Σo vs. h_w for given D:

Determine $(h_w)_{70}$, for given t, which makes v = 70 psi

$$v = \frac{V_{SF} - q(d/12)}{bd} = q\left(\frac{1.5D}{bd} - \frac{1}{12b}\right) = 62.4(h_w)_{70}\left(\frac{1.5D}{bd} - \frac{1}{12b}\right)$$

rearranging and substituting values,

$$(h_w)_{70} = \frac{13.46}{\frac{1.5D}{t - 2.5} - 0.0833} \text{ ft}$$

Determine $(\Sigma o)_{70}$ required (@SF) when v = 70 psi

$$V_{SF} = (\Sigma o)_{70}\, ujd = vbd + q(d/12)$$

or

$$(\Sigma o)_{70} = \frac{vb + (q/12)}{uj}$$

substituting values,

$$(\Sigma o)_{70} = 3.918 + 0.02426(h_w)_{70} \text{ in./ft, for bar sizes} \leqq \#7$$

where

D is in ft, t is in inches, h_w is in ft

Thus curves similar to Figure 2-6 can be drawn for each conduit diameter, since Σo and v are proportional to h_w for a given t and D.

t and A_s vs. h_w for given D:

The relation of A_s vs. h_w for a given t and D is nearly linear since sections are under-reinforced. Hence, only the A_s required (@EF) for the corresponding values of t and h_w making v = 70 psi need be computed. These A_s values may be computed from M_{EF} and N_E using ES-164, sheet 1 of 3.

Thus curves similar to Figure 2-7 can be drawn for each conduit diameter.

Table 2-7 provides all the data necessary to prepare the direct design charts for each of the standard pipe conduit diameters. Figure 2-8 shows the steel layout at closed horizontal sections of the risers. Using the direct design charts the steel is selected as follows:

RH1 by A_s but not less than 75 percent Σo, and not less than that required for T & S.

RH2 by A_s and Σo, and not less than that required for T & S.

All other by A_s for T & S.

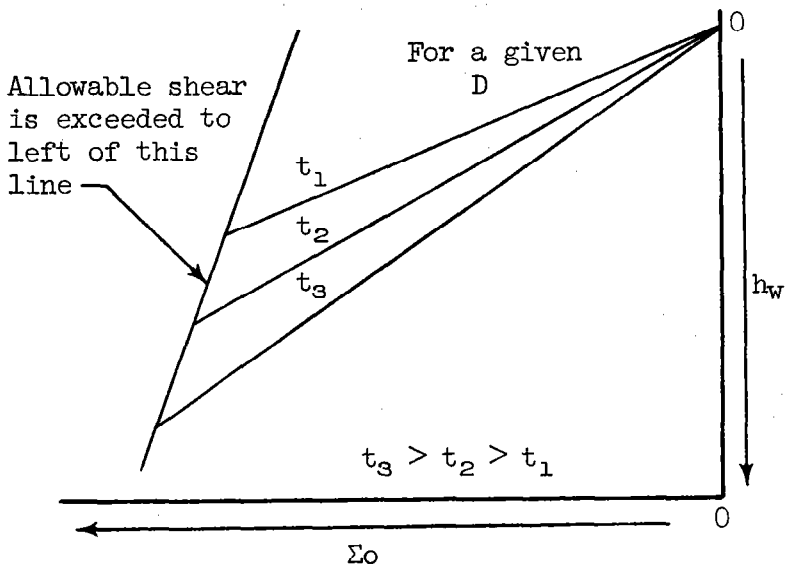

Figure 2-6. Typical direct design chart for Σo in horizontal bending.

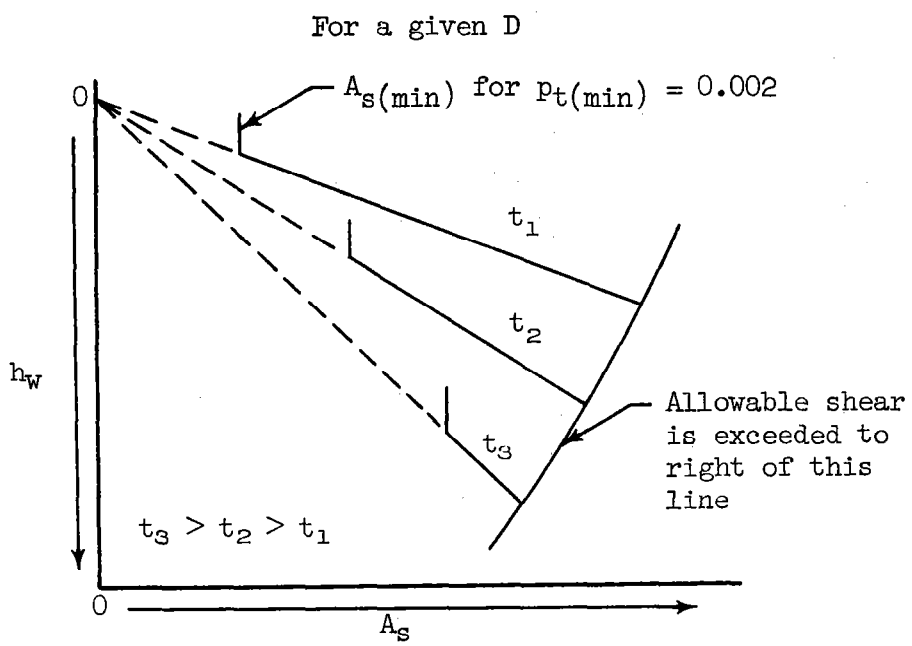

Figure 2-7. Typical direct design chart for A_s in horizontal bending.

Table 2-7. Data for preparation of direct design charts for horizontal bending

Col 6 × Col 8 × D in ft. — Col. 7 × Col 8 × (D in ft)²

D	t	$(h_w)_{70}$	$(\Sigma o)_{70}$	t/D	n N_E/qD	m M_{EF}/qD^2	q	N_E	M_{EF}	d	d"	Col 9 × Col 12 / 12 $N_E d''/12$	Col 10 + Col 13 M_s	A	$N_E/20$	$(A_s)_{70}$
in.	in.	ft	in./ft	-	-	-	klf/ft	kips/ft	ft kips/ft	in.	in.	ft kips/ft	ft kips/ft	sq in./ft	sq in./ft	sq in./ft
1	2	3	4	5	6	7	8	9	10	11	12	13	14	15	16	17
48	10	18.78	4.374	0.2083	1.708	0.662	1.172	8.01	12.4	7.5	2.5	1.7	14.1	1.29	0.40	0.89
	12	24.55	4.514	0.2500	1.750	0.680	1.532	10.72	16.7	9.5	3.5	3.1	19.8	1.42	0.54	0.88
	15	33.93	4.741	0.3125	1.812	0.705	2.117	15.34	23.9	12.5	5.0	6.4	30.3	1.64	0.77	0.87
	18	44.31	4.993	0.3750	1.875	0.730	2.765	20.74	32.3	15.5	6.5	11.2	43.5	1.89	1.04	0.85
	21	55.85	5.273	0.4375	1.938	0.754	3.485	27.02	42.0	18.5	8.0	18.0	60.0	2.18	1.35	0.83
	24	68.74	5.586	0.5000	2.000	0.780	4.289	34.31	53.5	21.5	9.5	27.2	80.7	2.52	1.72	0.80
	27	83.29	5.939	0.5625	2.062	0.807	5.197	42.86	67.1	24.5	11.0	39.3	106.4	2.91	2.14	0.77
42	10	21.83	4.448	0.2381	1.738	0.674	1.362	8.29	11.3	7.5	2.5	1.7	13.0	1.18	0.42	0.76
	12	28.68	4.614	0.2857	1.786	0.694	1.790	11.19	15.2	9.5	3.5	3.3	18.5	1.31	0.56	0.75
	15	39.98	4.888	0.3571	1.857	0.722	2.495	16.22	22.1	12.5	5.0	6.7	28.8	1.55	0.81	0.74
	18	52.70	5.197	0.4286	1.929	0.750	3.288	22.20	30.2	15.5	6.5	12.0	42.2	1.83	1.11	0.72
	21	67.13	5.547	0.5000	2.000	0.780	4.189	29.32	40.0	18.5	8.0	19.6	59.6	2.17	1.47	0.70
	24	83.65	5.947	0.5714	2.071	0.810	5.220	37.84	51.8	21.5	9.5	30.0	81.8	2.56	1.89	0.67
36	10	26.05	4.550	0.2778	1.778	0.690	1.626	8.67	10.1	7.5	2.5	1.8	11.9	1.08	0.43	0.65
	12	34.48	4.750	0.3333	1.833	0.712	2.152	11.83	13.8	9.5	3.5	3.4	17.2	1.23	0.59	0.64
	15	48.64	5.098	0.4167	1.917	0.746	3.035	17.45	20.4	12.5	5.0	7.3	27.6	1.49	0.87	0.62
	18	65.02	5.495	0.5000	2.000	0.780	4.057	24.34	28.5	15.5	6.5	13.1	41.6	1.81	1.22	0.59
	21	84.18	5.960	0.5833	2.083	0.816	5.253	32.83	38.6	18.5	8.0	21.9	60.5	2.20	1.64	0.56
30	10	32.30	4.702	0.3333	1.833	0.712	2.015	9.23	9.0	7.5	2.5	1.9	10.9	0.98	0.46	0.52
	12	43.22	4.967	0.4000	1.900	0.740	2.697	12.81	12.5	9.5	3.5	3.7	16.2	1.15	0.64	0.51
	15	62.11	5.425	0.5000	2.000	0.780	3.876	19.38	18.9	12.5	5.0	8.1	27.0	1.46	0.97	0.49
	18	84.87	5.977	0.6000	2.100	0.824	5.296	27.80	27.3	15.5	6.5	15.1	42.4	1.84	1.39	0.45
24	10	42.50	4.949	0.4167	1.917	0.746	2.652	10.17	7.9	7.5	2.5	2.1	10.0	0.90	0.51	0.39
	12	57.89	5.322	0.5000	2.000	0.780	3.612	14.45	11.3	9.5	3.5	4.2	15.5	1.09	0.72	0.37
	15	85.90	6.002	0.6250	2.125	0.835	5.360	22.78	17.9	12.5	5.0	9.5	27.4	1.48	1.14	0.34

Col. 3 $(h_w)_{70} = \dfrac{13.46}{\dfrac{1.5D}{t-2.5} - 0.0833}$

Col. 4 $(\Sigma o)_{70} = 3.918 + 0.02426(h_w)_{70}$

Col. 6 Obtained from Table 2-3

Col. 7 Obtained from Table 2-6

Col. 8 $q = 0.0624(h_w)_{70}$

Col. 11 $d = t - 2.5$

Col. 12 $d'' = d - t/2$

Col. 14 $M_s = M_{EF} + N_E d''/12$

Col. 15 Obtained from ES-164, sheet 1 of 3

Col. 17 $(A_s)_{70} = A - N_E/20$

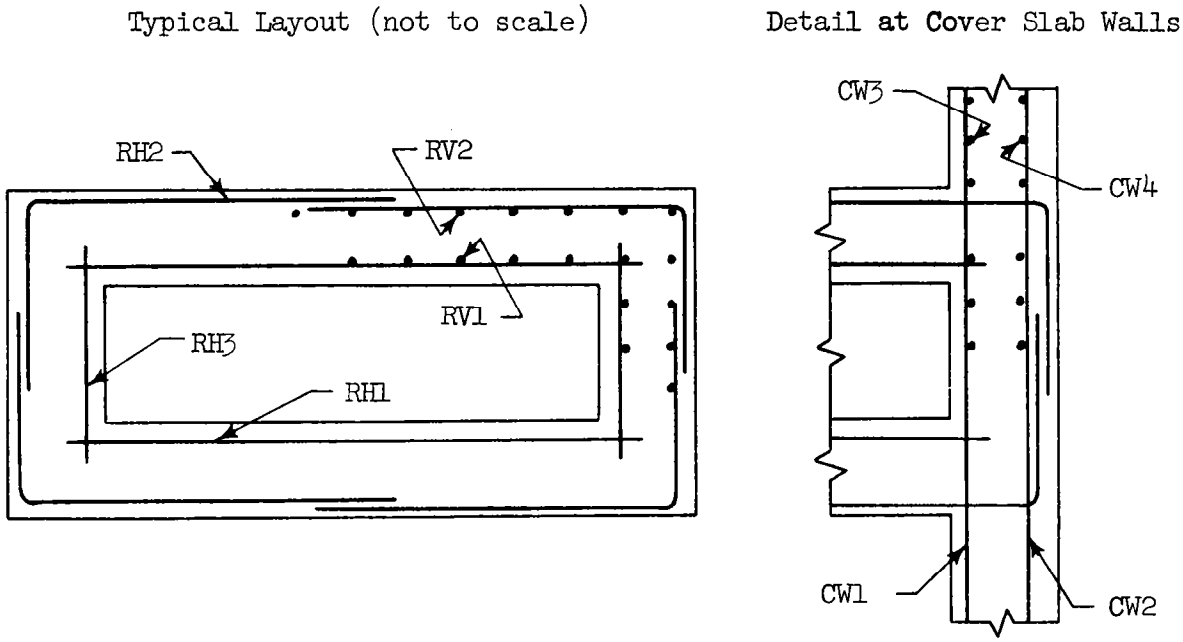

Figure 2-8. Steel layouts at closed horizontal sections of riser.

Wall thickness and steel selection. - Use of a tabular form similar to that shown in Figure 2-9 will facilitate design.

Observe that for a given value of loading on the riser (h_w) at the section under consideration, four items must be determined: wall thickness (t), (+) steel, (−) steel, and T & S steel. The last three items depend on the wall thickness selected. Hence, trial solutions using different thicknesses should be investigated. The combination finally chosen should reflect consideration of the requirements of adjacent sections to insure that the whole will fit together.

Sections at Low Stage Inlets

No low stage inlet will be shown on the standards. The location and size of this opening (if any) and the necessary steel changes are to be handled by the field as a modification of the standard plans. It should be recognized that such openings, if sufficiently large, will cause a significant change in structural behavior from that of the usual closed section.

Sections at the Conduit Entrance

An exact analysis of horizontal steel requirements in this region of the riser walls is complicated by two main factors:

(1) horizontal structural behavior varies between the limits of usual closed section behavior and pinned ended frame behavior, and

(2) the connection of the riser walls to the footing causes vertical bending and tends to restrain horizontal bending (this effect is presented under "wall-to-footing connection"), hence the load on the walls at any distance above the footing is divided between that producing horizontal bending and that producing vertical bending

h_x Range	h_w (Max. value for h_x range)	t		RH1 (+) Steel			RH2 (−) Steel			RH3, RV1, RV2 T and S Steel		Use
		Min.	Trial	Required		Selected	Required		Selected	Required	Selected	
				A_s	75%Σo	#@S	A_s	Σo	#@S	A_s	#@S	
ft	ft (of water)	in.	in.	in.^{2}/ft	in./ft	-	in.^{2}/ft	in./ft	-	in.^{2}/ft	-	-
1	2	3	4	5	6	7	8	9	10	11	12	13

Column 3 obtained from riser design chart for given h_w.
Columns 5 and 8, 9, and 11 obtained from riser design chart for given h_w and t.
Column 6 = 75% of column 9.

Figure 2-9. Suggested tabular form for design of closed sections for horizontal bending.

Analyses, presented subsequently, show that the following procedure yields conservative results for required amounts of horizontal steel:

(1) At and above D distance above the pipe invert at the conduit entrance — design for usual closed section behavior under the assumption that the entire load is resisted by horizontal bending.

(2) Between D distance above the pipe invert and the top of the footing — hold the steel amounts constant at the values determined for D distance above the pipe invert.

The layout of horizontal steel can therefore be the same as for the usual closed sections except for the omission of two RH2 bars and the addition of two RH4 bars as shown in Figure 2-10.

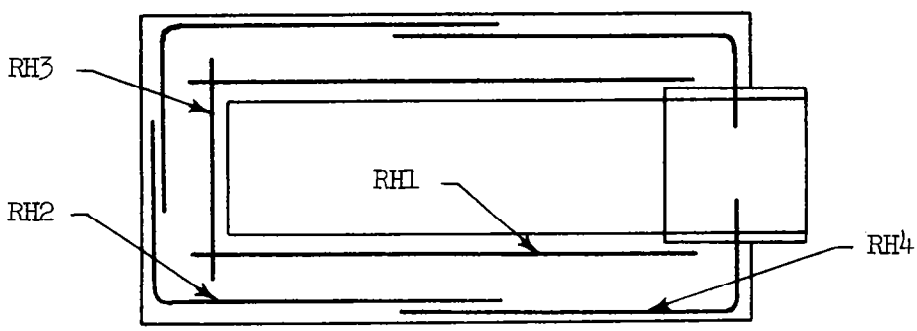

Figure 2-10. Layout of horizontal steel in sections at the conduit entrance.

Riser Walls, Vertical Bending

Wall-to-Footing Connection

Bending is produced in a vertical direction in the riser walls wherever a discontinuity of section occurs. Usually the action is not serious and is adequately resisted by the usual vertical steel provided for T & S. However, vertical bending of the same order of magnitude as is present in horizontal bending is produced by the wall-to-footing connection, since the riser walls cannot deflect horizontally at this location. When considering riser wall design, the wall-to-footing connection is assumed to be located at the elevation of the pipe invert at the conduit entrance and the variation in wall section due to the round bottom is neglected.

Vertical flexure in sidewalls. - No vertical bending would occur at the wall-to-footing connection if the riser walls were not connected to the footing, that is, if the walls merely rested on the footing without friction. However, with rotation and translation prevented, moments and shears are produced to satisfy the requirements of geometry. Figure 2-11 illustrates the various deflected shapes and the loading on the wall.

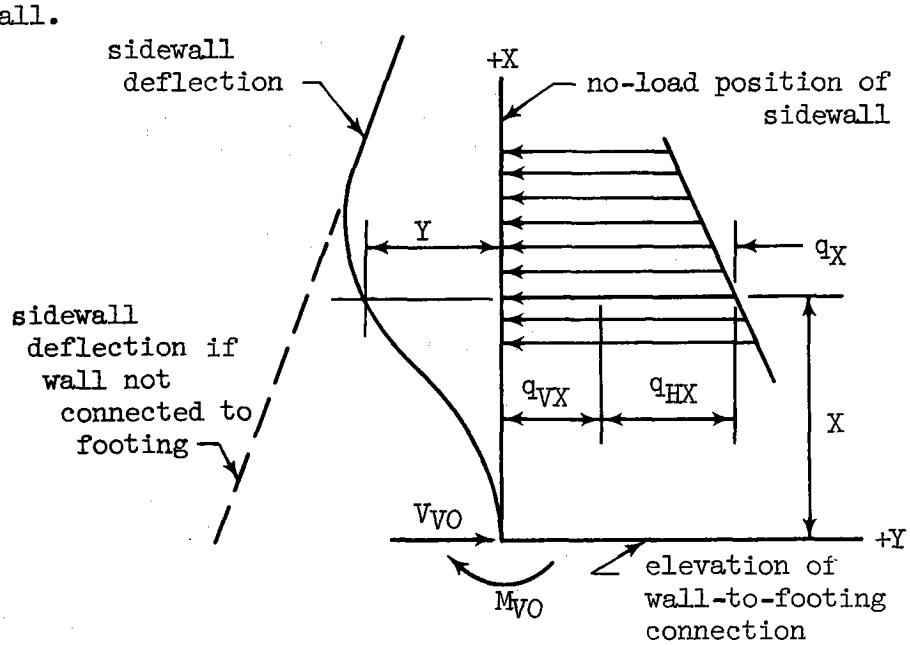

Figure 2-11. Vertical section through sidewall

Let:

M_{VO} = vertical moment in the riser wall at the wall-to-footing connection

V_{VO} = shear in the riser wall at the wall-to-footing connection due to vertical bending

q_X = the total unit load at the section under consideration

q_{HX} = the unit load resisted by horizontal bending at the section under consideration

q_{VX} = the unit load resisted by vertical bending at the section under consideration

Y = horizontal deflection of the riser wall at the section under consideration.

Then at any section:

$$q_X = q_{HX} + q_{VX}$$

But the horizontal deflection at any section may be expressed as:

$$Y = - K_y \frac{q_{HX} D^4}{EI}$$

the minus sign is used since (Y) is in the minus direction.

Here:

K_y = a horizontal deflection coefficient which depends on the location of the section under consideration.

Thus

$$q_{HX} = - \frac{EI}{K_y D^4} Y$$

and

$$q_{VX} = q_X - q_{HX} = q_X + \frac{EI}{K_y D^4} Y$$

The differential equation of the elastic curve of a beam is:

$$EI \frac{d^4Y}{dX^4} = Z_X$$

where Z_X is a load function.

Here:

$$Z_X = - q_{VX}$$

or

$$Z_X = - q_X - \frac{EI}{K_y D^4} Y$$

Thus

$$EI \frac{d^4Y}{dX^4} + \frac{EI}{K_y D^4} Y = - q_X$$

and letting

$$4\beta^4 = \frac{1}{K_y D^4}$$

then

$$\frac{d^4Y}{dX^4} + 4\beta^4 Y = - \frac{q_X}{EI}$$

It is possible to solve this equation by writing the general solution and evaluating the four constants of integration by using the boundary conditions. However, the equation

$$\frac{d^4Y}{dX^4} + 4\beta^4 Y = 0$$

has already been solved for a semi-infinite beam on an elastic foundation (see "Strength of Materials", Part II, page 12, by Timoshenko), loaded with M_{VO} and V_{VO} at its ends acting with the senses shown.

Timoshenko's complimentary solution:

$$Y = \frac{e^{-\beta X}}{2\beta^3 EI}\left[V_{VO}\cos\beta X - \beta M_{VO}(\cos\beta X - \sin\beta X)\right]$$

together with the particular solution:

$$Y = -\frac{q_X}{4\beta^4 EI}$$

lead to the following expressions:

$$M_{VO} = \frac{q}{2\beta^2}\left(1 - \frac{0.1074}{q\beta}\right)$$

$$V_{VO} = \frac{q}{\beta}\left(1 - \frac{0.1074}{2q\beta}\right)$$

and

$$M_{VX} = -\frac{V_{VO}}{\beta}\, e^{-\beta X}\sin\beta X + M_{VO}\, e^{-\beta X}(\cos\beta X + \sin\beta X)$$

$$V_{VX} = -V_{VO}\, e^{-\beta X}(\cos\beta X - \sin\beta X) - 2M_{VO}\beta\, e^{-\beta X}\sin\beta X$$

where

M_{VX} = vertical moment in the riser wall at section under consideration

V_{VX} = shear in the riser wall at the section under consideration due to vertical bending

q = $(q_X)_{X=0}$, the total unit load at the wall-to-footing connection

These equations follow the usual sign convention:

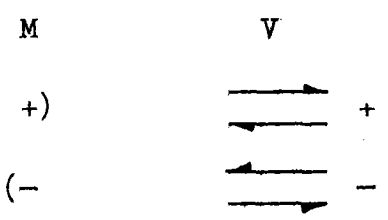

The units of the various quantities are:

M_{VO}, M_{VX} = ft kips/ft

V_{VO}, V_{VX} = kips/ft

D = ft

K_y = dimensionless

β = ft^{-1}

q = kℓf/ft

The values of various functions are given for convenience in Table 2-8.

Moments "damp out" quickly with distance from the wall-to-footing connection. This may be seen by examination of the expression for M_{VX}. Hence, the usual amounts of T & S steel soon become adequate to resist the vertical bending.

Table 2-8. Values of functions.

βX	$e^{-\beta X}\sin \beta X$	$e^{-\beta X}(\cos\beta X + \sin\beta X)$	$e^{-\beta X}(\cos\beta X - \sin\beta X)$
0.0	0.000	1.000	1.000
0.5	0.291	0.823	0.242
1.0	0.310	0.508	- 0.111
1.5	0.223	0.238	- 0.207
2.0	0.123	0.067	- 0.179
2.5	0.049	- 0.017	- 0.115
3.0	0.007	- 0.042	- 0.056
3.5	- 0.011	- 0.039	- 0.018
4.0	- 0.014	- 0.026	0.002
4.5	- 0.011	- 0.013	0.008
5.0	- 0.006	- 0.005	0.008

<u>Vertical flexure in endwalls</u>. - This case is similar to that of the sidewalls, except that endwall deflections oppose the direction of loading and hence, various signs are reversed. Also, intuitively, vertical bending in the endwalls is small relative to that in the sidewalls. Thus, T & S steel, properly anchored, may be adequate. Figure 2-12 illustrates the various deflected shapes and the loading on the wall.

The relations again are:

$$M_{VO} = \frac{q}{2\beta^2}\left(1 - \frac{0.1074}{q\beta}\right)$$

$$V_{VO} = \frac{q}{\beta}\left(1 - \frac{0.1074}{2q\beta}\right)$$

but

$$M_{VX} = + \frac{V_{VO}}{\beta} e^{-\beta X}\sin\beta X - M_{VO}\, e^{-\beta X}(\cos\beta X + \sin\beta X)$$

$$V_{VX} = + V_{VO}\, e^{-\beta X}(\cos\beta X - \sin\beta X) + 2M_{VO}\beta\, e^{-\beta X}\sin\beta X$$

These quantities are as defined for sidewalls.

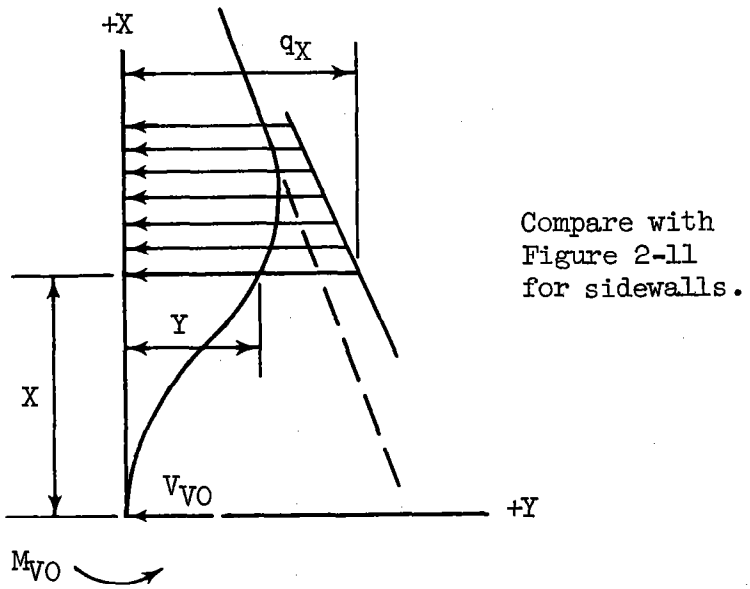

Figure 2-12. Vertical section through endwall.

Evaluation of coefficients K_y. - Before the vertical flexure moments and shears can be evaluated, the horizontal deflection coefficients K_y must be determined.

As previously noted, the horizontal structural behavior of the riser walls, at and near the conduit entrance, is intermediate between that of the usual closed section and that of a pinned ended frame.

Vertical flexure increases with horizontal deflections, thus conservative design dictates that K_y be evaluated on the basis of pinned frame action since a pinned frame has larger deflections than a similar but closed frame.

Also, the values obtained for corner moments (M_K) are directly influenced by the assumptions, regarding variations in moments of inertia, used in analyzing the structure. Conservatism is again served by using assumptions giving small corner moments and hence, large sidewall deflections.

Therefore, K_y, is evaluated on the basis of pinned frame action and prismatic members. Figure 2-13 shows the moment diagrams resulting from the statical system selected. Using (R) as the redundant force

and taking moments of moment areas about a line through the supports in accordance with the Conjugate Structure concept:

$$2 \times \frac{1}{3} \times \frac{q}{2}(3D + t)^2 \times (3D + t) \times \frac{3}{4} \times (3D + t)$$

$$+ \frac{q}{2}(3D + t)^2 \times (D + t) \times (3D + t)$$

$$- \frac{2}{3} \times \frac{q}{8}(D + t)^2 \times (D + t) \times (3D + t)$$

$$= 2 \times \frac{1}{2} \times R(3D + t) \times (3D + t) \times \frac{2}{3} \times (3D + t)$$

$$+ R(3D + t) \times (D + t) \times (3D + t)$$

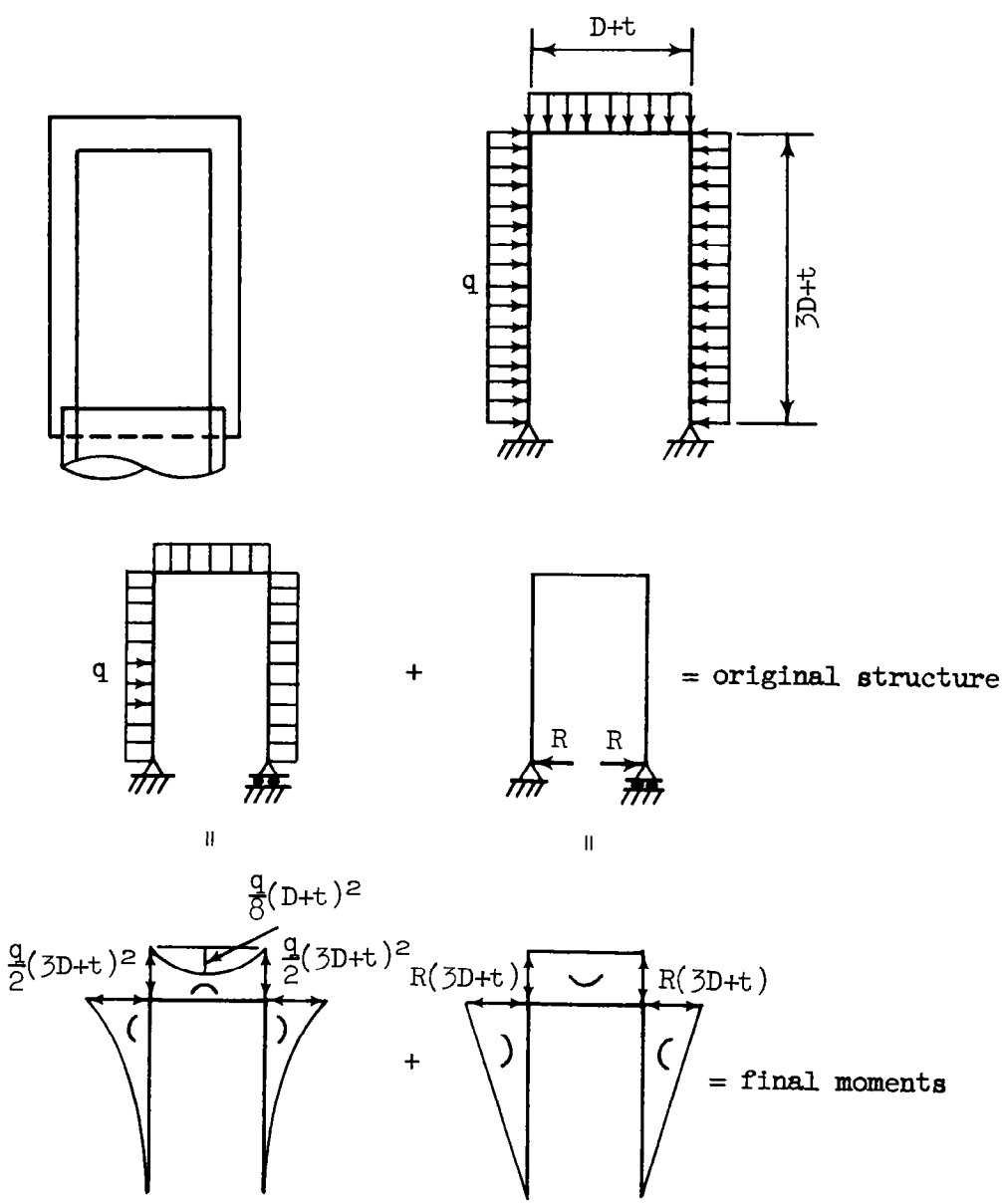

Figure 2-13. Sketches for analysis of pinned frame.

Thus:

$$R(3D + t)(36 + 20\,t/D) = qD^2[3(3 + t/D)^3 + 6(3 + t/D)^2(1 + t/D) - (1 + t/D)^3]$$

and, by statics

$$M_K = \frac{q}{2}(3D + t)^2 - R(3D + t)$$

From Figure 2-14, the mid-span deflections may be written as:

For sidewall $Y = \frac{5}{384}\frac{qD^4}{EI}(3 + t/D)^4 - \frac{1}{16}\frac{M_K D^2}{EI}(3 + t/D)^2$

For endwall $Y = \frac{1}{8}\frac{M_K D^2}{EI}(1 + t/D)^2 - \frac{5}{384}\frac{qD^4}{EI}(1 + t/D)^4$

Solutions of the equations for R, M_K, and Y yield values for K_y as given in Table 2-9, where

$$K_y = \frac{EI}{qD^4}\,Y$$

Table 2-9. Pinned frame corner moments and deflection coefficients.

t/D	0.00	0.25	0.50	0.75	1.00
Sidewall K_y	0.616	0.872	1.188	1.573	2.043
Endwall K_y	0.085	0.140	0.215	0.314	0.437
$\frac{M_K}{qD^2}$	0.78	0.88	1.00	1.14	1.29

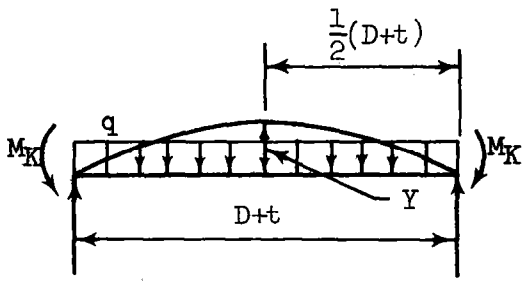

endwall deflections

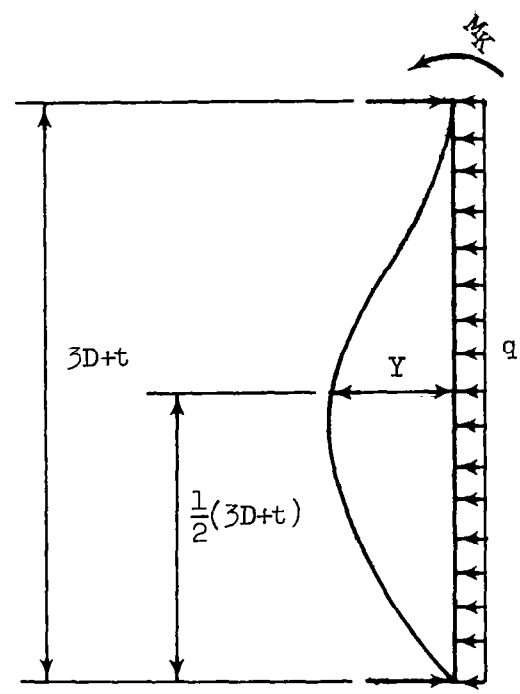

sidewall deflections

Figure 2-14. Pinned frame deflections.

Example of computation of M_{VO} and V_{VO}. - The following example is presented for two purposes; first, to indicate the ease with which the computations may be made and second, to indicate the order of magnitude of vertical bending.

Assume: $D = 4.0$ ft

$t = 24$ in.

$h_w = 60$ ft at the wall-to-footing connection

$\therefore q = 3.74$ klf/ft

At center of sidewall:

$$t/D = 24/48 = 0.50$$

$$\therefore K_y = 1.188$$

$$\beta^4 = \frac{1}{4 \times 1.188 \times (4)^4} = \frac{1}{1215}$$

$$\beta^2 = \frac{1}{34.9}$$

$$\beta = 0.169/\text{ft}$$

$$M_{VO} = \frac{3.74 \times 34.9}{2}\left(1 - \frac{0.1074}{3.74 \times 0.169}\right) = 54.1 \text{ ft kips/ft}$$

$$V_{VO} = \frac{3.74}{0.169}\left(1 - \frac{0.1074}{2 \times 3.74 \times 0.169}\right) = 20.3 \text{ kips/ft}$$

At center of endwall:

$$t/D = 0.50$$

$$\therefore K_y = 0.215$$

$$\beta^4 = \frac{1}{220}$$

$$\beta^2 = \frac{1}{14.85}$$

$$\beta = 0.259$$

$$M_{VO} = \frac{3.74 \times 14.85}{2}\left(1 - \frac{0.1074}{3.74 \times 0.259}\right) = 24.7 \text{ ft kips/ft}$$

$$V_{VO} = \frac{3.74}{0.259}\left(1 - \frac{0.1074}{2 \times 3.74 \times 0.259}\right) = 13.6 \text{ kips/ft}$$

Wall thickness by shear due to vertical bending. - The wall thickness required by shear at [d] distance above the wall-to-footing connection at the center of the sidewalls due to vertical action may be greater than the thickness required by shear at D distance above the connection due to horizontal action. This may be checked by:

$$v = \frac{(V_{VX})_{X=d}}{bd} \leq 70 \text{ psi} \quad \text{where} \quad d \approx t - 3.5$$

Vertical steel. - Determine the outside steel required at the center of the sidewall. The force system consists of the moment M_{VO} and a direct force N_O due to the weight of the riser. If the amount of steel thus required exceeds that required for T & S, the height at which T & S steel is adequate will have to be checked.

Thus, throughout the length of the sidewall, for the inside steel use that required by T & S, for the outside steel use the larger of that required for T & S or that required for vertical bending at the center of the sidewall.

In the endwall follow a procedure similar to that for the sidewalls except note that vertical bending produces tension in the inside steel. (Note, if T & S steel is adequate in the sidewalls it will also be adequate in the endwall.)

Figure 2-15 illustrates the steel concerned.

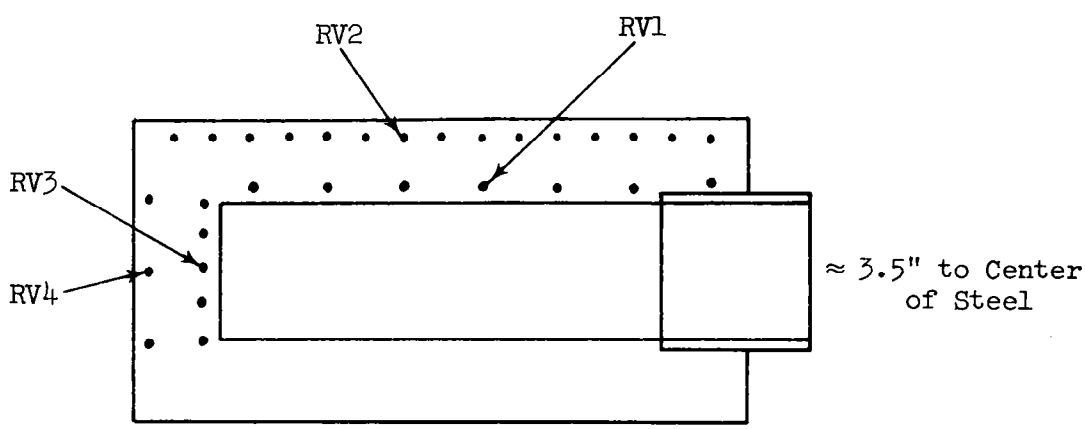

Figure 2-15. Vertical steel at wall-to-footing connection.

Division of wall loading. - The theoretical division of wall loading between horizontal and vertical bending along a vertical line may be obtained as follows. From the sidewall investigation (the same end result is obtained from the endwall investigation):

$$q_{HX} = -\frac{EI}{K_y D^4} Y = -4\beta^4 EIY$$

substitution of the expressions for Y, V_{VO}, and M_{VO} and simplifying gives:

$$q_{HX} = q_X - q[e^{-\beta X}(\cos\beta X + \sin\beta X) - \frac{0.1074}{q\beta} e^{-\beta X}\sin\beta X]$$

Thus q_{HX} varies from $q_{HX} = 0$ at the wall-to-footing connection to $q_{HX} = q_X$ at some distance above the connection as shown by Figure 2-16. This distance may be determined by setting the term in brackets in the above equation to zero and solving for X. The procedure for determining the required horizontal steel given under "Sections at the Conduit Entrance" will be seen to be conservative.

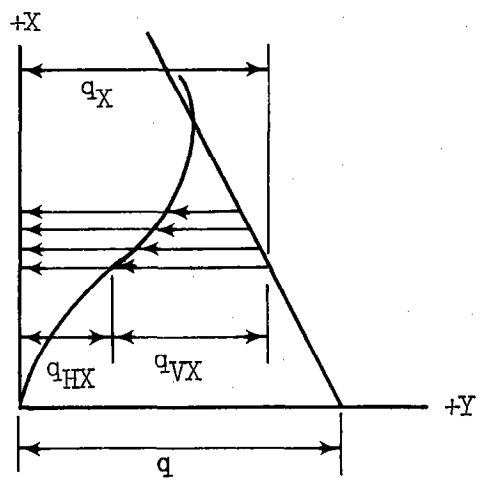

Figure 2-16. Typical load division curve.

Wall Thickness Change Locations

Since walls of different thicknesses have different stiffnesses, the linear increase in deflection along any vertical line in the riser will be disrupted at locations where the thickness changes. Hence, vertical bending is introduced at such locations. Analysis will show that this bending is not serious and is adequately resisted by the usual amounts of T & S steel, when the changes in wall thickness are not large.

Provision for Moment from Embankment Loading

At closed sections. - Ordinarily the vertical steel provided for T & S will be adequate to resist the moment produced. As an approximate but quick check, the area of tensile vertical steel required in the downstream endwall may be determined conservatively as

$$A_s = \frac{M}{f_s(3D + t)}$$

where

A_s = total steel required, in.^{2}

f_s = 20 ksi

D = pipe diameter, ft

t = wall thickness, ft

If this check indicates the T & S steel may be inadequate, more exact analyses can be employed before additional steel is provided.

The moment may be computed as indicated by Figure 2-17. Thus:

$$M = \frac{1}{2}Fh_s = 0.0125\ Bh_s^3 \quad \text{ft kips}$$

where

B = width of endwall, ft (for convenience, use some constant "weighted" width)

h_s = as previously defined, ft

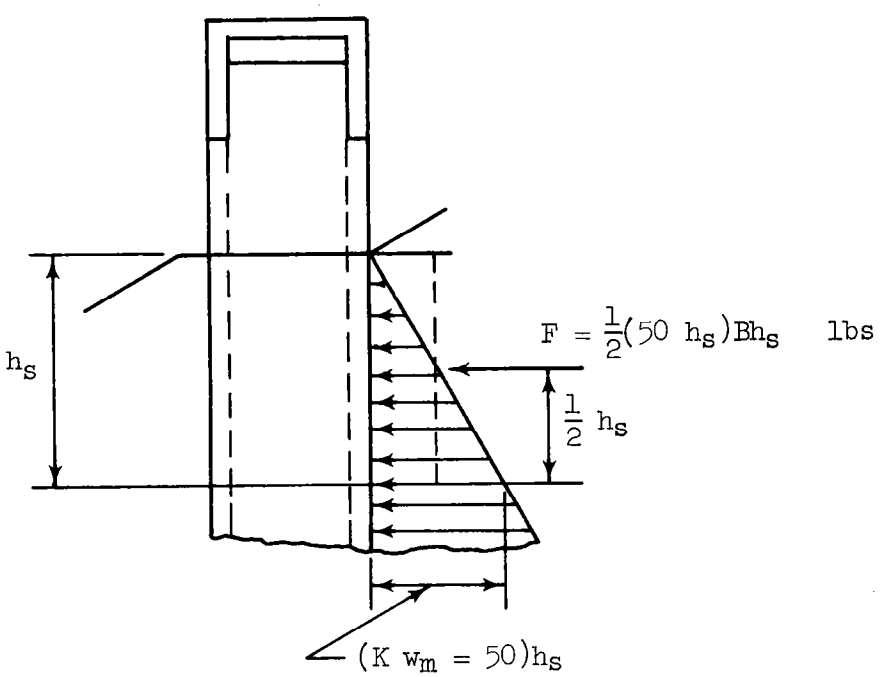

Figure 2-17. Assumed embankment loading.

At conduit entrance. - Extra tensile vertical steel, in the ends of the sidewalls adjacent to the conduit entrance, may be required since the vertical downstream endwall steel is interrupted by the spigot wall fitting. The amount may be determined conservatively from the above equations, but the moment arm may need to be reduced slightly, depending on available room to place the steel. This steel will also serve the additional function of providing for the pinned frame action reaction.

Stability Analyses

The plan dimensions and layout of the footing must be such that the earth bearing pressure and flotation criteria, previously given, are satisfied. Various load combinations should be investigated, depending on the location of the riser relative to the embankment. As an estimate in these analyses, the thickness of the footing may be taken equal to the thickness of the riser walls immediately above the footing plus about 3". Probably the difference, if any, between the footing thickness assumed here and the footing thickness subsequently determined by strength design, will not cause these analyses to be significantly in error.

Bearing pressures may be analyzed in several ways. Because of the manner in which allowable pressures are stated, the following approach is suggested, see Figure 2-18.

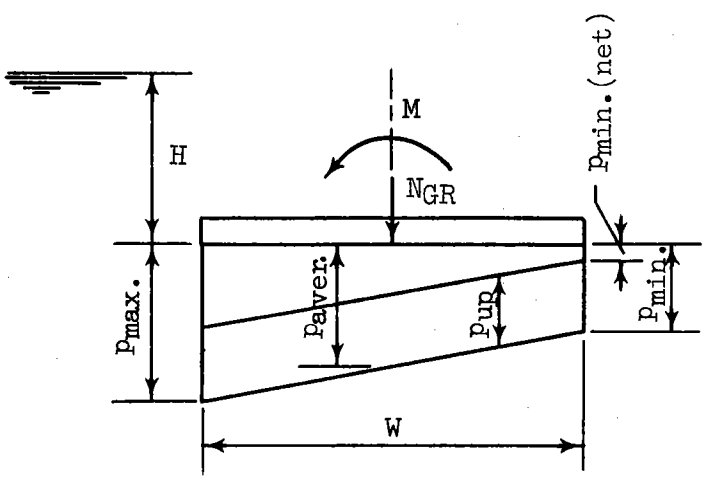

Figure 2-18. Analyses of bearing pressures.

$$p_{max.} = \frac{N_{GR}}{A} + \frac{Mc}{I} \quad \text{but} \quad \frac{c}{I} = \frac{W/2}{\frac{1}{12}AW^2} = \frac{6}{AW}$$

where

M = moment about ℄ of bottom of footing

N_{GR} = sum of vertical forces, but not including uplift

W = width of footing in the direction of M

A = area of footing

thus

$$p_{max.} = \frac{N_{GR}}{A}\left(1 + \frac{6M}{WN_{GR}}\right)$$

and

$$p_{aver.} = \frac{N_{GR}}{A}$$

and

$$p_{min.} = \frac{N_{GR}}{A}\left(1 - \frac{6M}{WN_{GR}}\right)$$

when uplift is present:

$$p_{min.(net)} = p_{min.} - p_{up} \quad \text{where} \quad p_{up} = 62.4H$$

To be adequate, the following must be satisfied:

$p_{max.}$ ≤ allowable maximum pressure

$p_{aver.}$ ≤ allowable average pressure

$p_{min.}$ ≧ 0

$p_{min.(net)}$ ≧ 0

Direct design for required bearing area is usually impractical because N_{GR} is a function of A. Therefore, the simplest procedure is to estimate A, check adequacy and revise as necessary.

Riser in the Reservoir Area

No endwall footing projections need to be used, required bearing area may be provided by using sidewall footing projections. The following conditions should be investigated:

(1) No sediment, wind on sidewall, moist soil condition.
(2) No sediment, no wind, water surface to design sediment surface.
(3) No sediment, wind on sidewall, water surface to design sediment surface.
(4) No sediment, no wind, water surface to crest of covered inlet.
(5) Sediment to design sediment surface, no wind, water surface to design sediment surface.
(6) Sediment to design sediment surface, no wind, water surface to crest of covered inlet.
(7) Sediment to design sediment surface, no wind, water surface to bottom of cover slab (riser primed).
(8) The flotation criteria.

Riser in the Embankment

An upstream endwall footing projection will be used when advantageous even though its use may introduce some difficulty regarding the installation of a reservoir drain. The following conditions should be investigated:

(1) Embankment present, moist soil condition.
(2) Embankment present, water surface to embankment (berm) surface.
(3) Embankment present, water surface to crest of covered inlet.
(4) Embankment present, water surface to bottom of cover slab (riser primed).
(5) No embankment placed, moist soil condition.
(6) The flotation criteria.

Footing Strength Design

Design is similar to that for the heel and toe of retaining walls. The footing thickness may be controlled by shear. The critical section for shear, as a measure of diagonal tension, may be taken [d] distance from the face of the riser wall, where [d] is the effective depth of the footing. Critical footing projection loadings may be determined from the various stability analyses previously listed. Note that the projection may be subjected to positive moment for some loadings and to negative moment for other loadings.

Particular care should be exercised in detailing the vertical steel connecting the riser walls to the footing. When considering footing strength design with the round bottom riser, the footing support for the riser walls should probably be taken at D/4 above the pipe invert at the conduit entrance, rather than at the pipe invert elevation, to account for the variation in wall section and increased stiffness of this type of base. Thus, the moment in the footing, between the sidewalls, due to M_{VO} and V_{VO} is, as indicated by Figure 2-19:

$$M = M_{VO} + V_{VO}(D/4 + t_f/2)$$

If desirable, due to this moment, a greater thickness than t_f can be provided in the footing between the sidewalls. That is, the footing thickness between the sidewalls may be greater than the footing projection thickness. The moment expression can be modified accordingly.

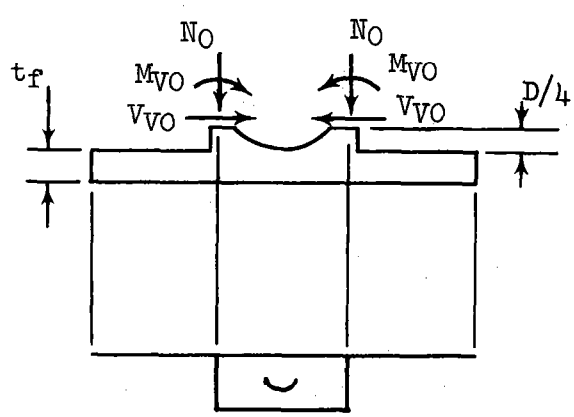

Figure 2-19. Moment in footing due to vertical bending.

CHAPTER 3. EXAMPLE DESIGN

Riser Data

$D = 30$ in.

$N_{ih} = 40$ ft

$N_{is} = 30$ ft

$N_{sh} = 10$ ft

Riser located in the embankment.
Location of riser wall construction joints:

$h_x = 6.5, 11.5, 16.5, 21.5, 26.5, 31.5,$ and 36.5 ft

Cover Slab and Cover Slab Walls

Use standard design:

Cover slab thickness = 8 in.
Riser wall and cover slab wall thickness = 10 in.
Steel as given in Table 2-2.
Layout as shown in Figure 2-2.

Volume and weight - for subsequent computations:

Slab -

$$V = \frac{8}{12}(3 \times 2.5 + \frac{20}{12})\ (5 \times 2.5 + \frac{20}{12}) = 86.5 \text{ ft}^3$$

$$W = 13.0 \text{ kips}$$

Slab walls -

Above crest

$$V = 2\ (\frac{10}{12})(\frac{2.5}{2})\ (5 \times 2.5 + \frac{20}{12}) = 29.5 \text{ ft}^3$$

$$W = 4.4 \text{ kips}$$

Below crest

$$V = 4\ (\frac{10}{12})\ (\frac{6}{12})\ (2 \times 2.5) +$$

$$4(\frac{10}{12})\ (\frac{1}{2} \times 2 \times 2.5 \times 2 \times 2.5) = 50.0 \text{ ft}^3$$

$$W = 7.5 \text{ kips}$$

Riser Wall Loading

As discussed in Chapter 1, the loads on the riser walls are given by:

$h_w = 6.0 \qquad 0 \leq h_x \leq 6.0$

$h_w = h_x \qquad 6.0 \leq h_x \leq 10.0$

$h_w = h_x + 0.72(h_x - 10) \qquad 10.0 \leq h_x \leq 40.0$

Design of Riser Walls

Wall Thickness at Wall-to-Footing Connection

$h_x = 40$ ft

$q = 62.4(40 + 0.72 \times 30) = 3840$ psf

Try t = 15 in., d = 15 − 3.5 = 11.5 in.:

$t/D = \frac{15}{30} = 0.500$ therefore $K_y = 1.188$

$$\beta = \left(\frac{1}{4 \times 1.188 \times [2.5]^4}\right)^{1/4} = \frac{1}{3.70}$$

$$V_{VO} = 3.840 \times 3.70 \left(1 - \frac{0.1074 \times 3.70}{2 \times 3.840}\right) = 13.45 \text{ kips/ft}$$

$$M_{VO} = \frac{3.840 \times (3.70)^2}{2} \left(1 - \frac{0.1074 \times 3.70}{3.840}\right) = 23.5 \text{ ft kips/ft}$$

Shear at d above the connection:

$$\beta X = \frac{1}{3.70}\left(\frac{11.5}{12}\right) = 0.259$$

$$e^{-\beta X}(\cos\beta X - \sin\beta X) \approx 0.607$$

$$e^{-\beta X}(\sin\beta X) \approx 0.151$$

$$V_{VX} = -13.45(0.607) - 2(23.5)\left(\frac{1}{3.70}\right)(0.151) = 10.1 \text{ kips/ft}$$

$$v = \frac{V_{VX}}{bd} = \frac{10100}{12 \times 11.5} = 73 > 70 \text{ psi, therefore no good}$$

Try t = 18 in., d = 18 − 3.5 = 14.5 in.:

$t/D = \frac{18}{30} = 0.600$ therefore $K_y = 1.342$

$$\beta = \frac{1}{3.81}$$

$$V_{VO} = 3.840 \times 3.81 \left(1 - \frac{0.1074 \times 3.81}{2 \times 3.840}\right) = 13.8 \text{ kips/ft}$$

$$M_{VO} = \frac{3.840 \times (3.81)^2}{2} \left(1 - \frac{0.1074 \times 3.81}{3.840}\right) = 24.9 \text{ ft kips/ft}$$

Shear at d above the connection:

$$\beta X = \frac{1}{3.81}\left(\frac{14.5}{12}\right) = 0.318$$

$$e^{-\beta X}(\cos\beta X - \sin\beta X) \approx 0.518$$

$$e^{-\beta X}(\sin\beta X) \approx 0.185$$

$$V_{VX} = -13.8(0.518) - 2(24.9)\left(\frac{1}{3.81}\right)(0.185) = -9.6 \text{ kips/ft}$$

$$v = \frac{9600}{12 \times 14.5} = 55 < 70 \text{ psi, therefore OK}$$

and use t = 18 in. unless horizontal bending requires a greater thickness.

Design for Horizontal Bending

Table 3-1 summarizes the wall thicknesses and steel sizes and spacings which were selected using Figure 3-1. Layouts will be as shown in Figures 2-8 and 2-10.

Volume and weight - for subsequent computations:

Volume of riser above footing

Cover slab	=	86.5
Cover walls	=	79.5
Riser walls		
17(38.24 − 18.75)	=	331.3
10(42.75 − 18.75)	=	240.0
10(50.00 − 18.75)	=	312.5
3(57.75 − 18.75)	=	117.0
		1166.8 ft^3

Weight of riser above footing 0.150(1166.8) = 175.0 kips

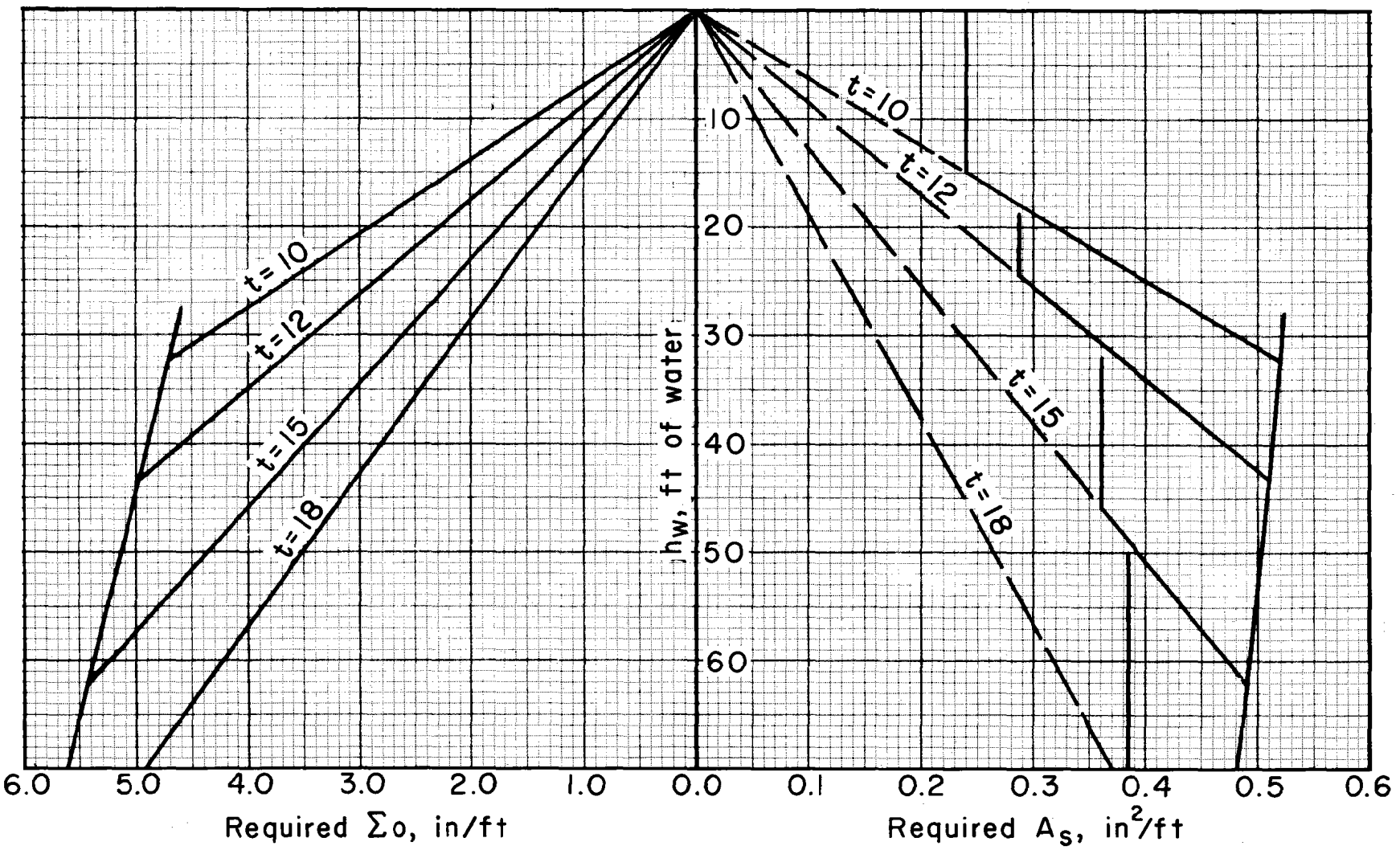

Figure 3-1. Direct design chart for horizontal bending, D = 30 in.

Table 3-1. Summary of riser wall design for horizontal bending.

h_x	h_w	t		(+) Steel			(−) Steel			T & S Steel	
		min.	use	A_s	75%Σo	Selected	A_s	Σo	Selected	A_s	Selected
0 - 10	10.0			0.24	1.1	#5@15	0.24	1.5	#5@15		
10 - 13.5	16.0	10	10	0.26	1.7	#5@12	0.26	2.3	#5@ 9	0.24	#5@15
13.5 - 17	22.0			0.35	2.4	#5@ 9	0.35	3.2	#5@ 6		
17 - 22	30.6	10	12	0.36	2.6	#5@ 9	0.36	3.5	#5@ 6	0.29	#5@12
22 - 27	39.2	12		0.46	3.4	#5@ 6	0.46	4.5	#6@ 6		
27 - 32	47.8	15	15	0.38	3.1	#6@ 9	0.38	4.2	#6@ 6	0.36	#6@12
32 - 37	56.5	15		0.45	3.8	#6@ 6	0.45	5.0	#7@ 6		
37 - 40	57.3*	15**	18	0.38	3.1	#6@ 9	0.38	4.1	#6@ 6	0.38	#6@12***

* For h_x = 40 - 2.5 = 37.5 ft based on load division between horizontal and vertical bending.

** $t_{min.}$ = 15 in. if horizontal bending controlled.

*** See following pages for design of other vertical steel.

Vertical Steel at Wall-to-Footing Connection

In sidewalls - outside steel at center of sidewalls:

$V_{VO} = 13.80$ kips/ft

$M_{VO} = 24.9$ ft kips/ft

$d = 18 - 3.5 = 14.5$ in.

Direct compressive force:

Weight of riser above footing = 175.0 kips

Pressure = 175.0/(57.75 − 18.75) = 4.48 ksf

$N_O = 4.48 \times 18/12 = 6.72$ kips/ft

Analysis for required steel:

$d'' = 18/2 - 3.5 = 5.5$ in.

$M_s = 24.9 + 6.72 \times 5.5/12 = 28.0$ ft kips/ft

thus $A = 1.30$ in.^{2}/ft

and $A_s = 1.30 - 6.72/20 = 0.96$ in.^{2}/ft

$$\Sigma o = \frac{V_{VO}}{ujd} = \frac{13800 \times 8}{350 \times 7 \times 14.5} = 3.11 \text{ in./ft}$$

Use #7@6 ($A_s = 1.20$, $\Sigma o = 5.50$)

Check steel required at first construction joint:

Neglect change in wall thickness from 18 in. to 15 in. at 6 in. below joint, treat as though t = 18 in.

$$\beta X = \frac{1}{3.81}(3.5) = 0.92$$

$$e^{-\beta X}(\sin\beta X) \approx 0.307$$

$$e^{-\beta X}(\cos\beta X + \sin\beta X) \approx 0.559$$

$$M_{VX} = -13.8\,(3.81)(0.307) + 24.9\,(0.559) = -2.3 \text{ ft kips/ft}$$

Thus, moment passes through zero a short distance below the first joint. Extend, by the use of dowels, the #7@6 the usual lap distance above the first joint.

In endwalls - inside steel at center of endwall:

$t/D = 18/30 = 0.600$ therefore $K_y = 0.255$

$$\beta = \left(\frac{1}{4 \times 0.255 \times [2.5]^4}\right)^{1/4} = \frac{1}{2.52}$$

$$M_{VO} = \frac{3.840 \times (2.52)^2}{2}\left(1 - \frac{0.1074 \times 2.52}{3.840}\right) = 11.3 \text{ ft kips/ft}$$

Analysis for required steel:

$M_s = 11.3 + 6.72 \times 5.5/12 = 14.4$ ft kips/ft

thus $A = 0.64$ in^2/ft

and $A_s = 0.64 - 6.72/20 = 0.30$ in^2/ft < required for T & S

Vertical Steel for Moment from Embankment Loading

Determine "weighted" width of endwall for use in evaluating embankment loadings:

$$\begin{aligned} 7(4.17) &= 29.19 \\ 10(4.50) &= 45.00 \\ 10(5.00) &= 50.00 \\ 3(5.50) &= \underline{16.50} \\ & \quad 140.69 \end{aligned} \qquad B = \frac{140.69}{30} = 4.69 \text{ ft}$$

The moment to be resisted is:

$$M = 0.0125(4.69)h_s^3 = 0.0586\ h_s^3 \text{ ft kips}$$

Because of the conduit entrance, the vertical T & S steel in the downstream endwall is not effective below the first construction joint, nor above it until the required embedment length is reached (taken as 2.0 ft or approximately 30 #6 bar diameters). Hence this T & S steel is only checked for values of $h_x \leq 34.5$ ft. Table 3-2, in which:

$$A_s = \frac{M}{20(3D+t)} \text{ in}^2$$

shows the analysis. Since this analysis over estimates the required steel, the usual T & S steel in the downstream endwall is considered adequate for $h_x \leq 34.5$ ft even though the indicated required A_s at $h_x = 34.5$ ft is somewhat greater than the A_s provided.

Table 3-2. Vertical steel for moment from embankment loading at usual closed sections.

h_x	h_s	M	t	3D+t	A_s	2(D+2t)	A_s provided for T&S	
							in^2/ft/surface	total
17	7	20	10	8.33	0.1	8.33	#5@15 = 0.25	2.1
22	12	101	12	8.50	0.6	9.00	#5@12 = 0.31	2.8
27	17	289	12	8.50	1.7	9.00	#5@12 = 0.31	2.8
32	22	625	15	8.75	3.6	10.00	#6@12 = 0.44	4.4
34.5	24.5	862	15	8.75	4.9	10.00	#6@12 = 0.44	4.4

For values of $h_x > 34.5$ ft, assume the steel in the downstream 3 ft of the sidewalls is effective in resisting the moment and use $(3D + t/2)$ as the moment arm. Thus for $h_{x(max.)} = 40$ ft:

$h_s = 30$ ft

$M = 1580$ ft kips

$$A_s = \frac{1580}{20(8.25)} = 9.6 \text{ in.}^2$$

Provided by inside steel for T & S:

#6@12 = 0.44 x 3 x 2 = 2.6 in.^{2}

Provided by outside steel for vertical bending

#7@6 = 1.20 x 3 x 2 = 7.2 in.^{2}

Total area provided = 9.8 in.^{2}, OK

Stability Analyses

Preliminaries

Volume outside riser walls but inside the projected 5.5 x 10.5 (the maximum) section:

Between footing and earth surface:

7(57.75 − 38.24)	=	136.6
10(57.75 − 42.75)	=	150.0
10(57.75 − 50.00)	=	77.5
3(57.75 − 57.75)	=	0.0
V_1	=	364.1 ft^3

Between earth surface and crest of covered inlet:

10(57.75 − 38.24)	=	195.1
slab walls	=	− 50.0
V_2	=	145.1 ft^3

Displacement volume of riser between footing and crest of covered inlet:

slab walls	=	50.0
17(38.24)	=	650.1
10(42.75)	=	427.5
10(50.00)	=	500.0
3(57.75)	=	173.2
V_D	=	1800.8 ft^3

Rough, preliminary computations indicate a footing of about 16 ft x 14 ft with a thickness of 21 inches is required. Figure 3-2 shows the trial dimensions.

Thus, for the footing:

Area = 224 ft^2

Volume = 392 ft^3

Weight = 58.8 kips

and the various working volumes:

$V_{B_1} = 30(2 \times 4.25 \times 10.5) = 2680\ ft^3$

$V_{B_1}' = (10/30)\ V_{B_1} = 893\ ft^3$

$V_{B_2} = 30(5.5 \times 14) = 2310\ ft^3$

$V_{B_2}' = (10/30)\ V_{B_2} = 770\ ft^3$

(Could have taken the 50.0 ft^3 for the slab walls from V_{B_1}' instead of from V_2, or could have taken it partly from both.)

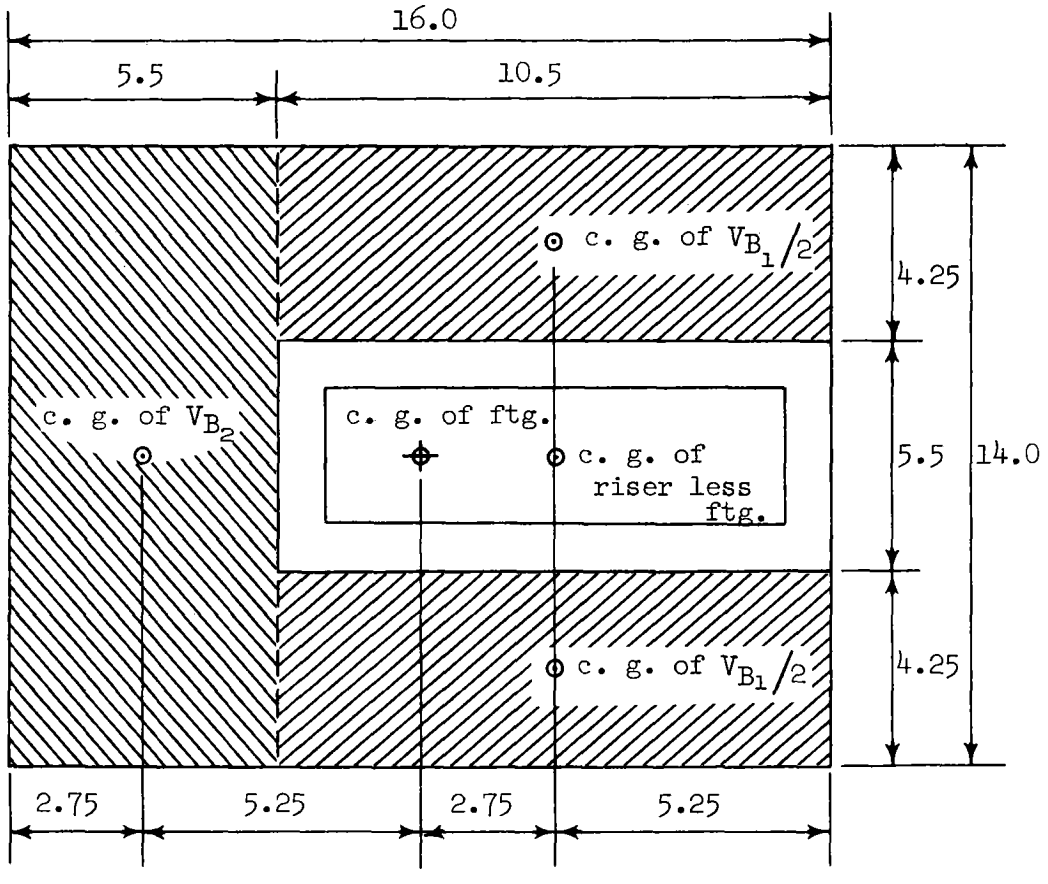

Figure 3-2. Plan of trial footing.

Analyses

(1) Embankment present, moist soil conditions:

Allowable average pressure = 0.140 x 31.75 + 2.00 = 6.44 ksf
Allowable maximum pressure = 0.140 x 31.75 + 4.00 = 8.44 ksf
Weighted wall width = 4.69 ft.

Embankment moment:

$M = 0.0125 \times 4.69 \times (31.75)^3 = 1875$ ft kips

Riser less footing	= 175.0 x (− 2.75)	=	− 481
Footing	= 58.8 x (0)	=	0
V_1 = 364.1 x 0.14	= 51.0 x (− 2.75)	=	− 140
V_{B_1} = 2680 x 0.14	= 375.0 x (− 2.75)	=	− 1030
V_{B_2} = 2310 x 0.14	= 323.0 x (+ 5.25)	=	+ 1695
	982.8 kips		+ 44 ft kips

Moment about ℄ of footing:

$M_{℄} = 1875 + 44 = 1919$ ft kips

$p_{max.} = \frac{983}{224}\left(1 + \frac{6 \times 1919}{16 \times 983}\right) = 4.39(1.733) = 7.62 < 8.44$ ksf, OK

$p_{aver.} = 4.39 < 6.44$ ksf, OK

$p_{min.} = 4.39(0.267) = 1.17 > 0$ ksf, OK

(2) Embankment present, water surface to embankment (berm) surface:

Allowable average pressure = 0.140 x 31.75 + 1.00 = 5.44 ksf
Allowable maximum pressure = 0.140 x 31.75 + 2.00 = 6.44 ksf

$M = (30/50)(1875) = 1125$ ft kips

$M_{℄} = 1125 + 44 = 1169$ ft kips

$p_{max.} = \frac{983}{224}\left(1 + \frac{6 \times 1169}{16 \times 983}\right) = 4.39(1.446) = 6.35 < 6.44$ ksf, OK

$p_{aver.} = 4.39 < 5.44$ ksf, OK

$p_{min.} = 4.39(0.554) = 2.43 > 0$ ksf, OK

$p_{uplift} = 0.0624 \times 31.75 = 1.98$ ksf

$p_{min.}$ (net) $= 2.43 - 1.98 = 0.45 > 0$ ksf, OK

(3) Embankment present, water surface to crest of covered inlet:

Allowable average pressure = 5.44 + 10 x 0.0624 = 6.06 ksf
Allowable maximum pressure = 6.44 + 10 x 0.0624 = 7.06 ksf

Previous	=982.8	=	+ 44
V_2 = 145.1 x 0.0624	= 9.1 x (− 2.75)	=	− 25
V_{B_1}' = 893 x 0.0624	= 55.7 x (− 2.75)	=	− 153
V_{B_2}' = 770 x 0.0624	= 48.0 x (+ 5.25)	=	+ 252
	1095.6 kips		+ 118 ft kips

$M_{\not c}$ = 1125 + 118 = 1243 ft kips

$p_{max.} = \frac{1096}{224}\left(1 + \frac{6 \times 1243}{16 \times 1096}\right) = 4.90(1.425) = 7.00 < 7.06$ ksf, OK

$p_{aver.}$ = 4.90 < 6.06 ksf, OK

$p_{min.}$ = 4.90(0.575) = 2.82 > 0 ksf, OK

p_{uplift} = 0.0624 x 41.75 = 2.60 ksf

$p_{min(net)}$ = 2.82 − 2.60 = 0.22 > 0 ksf, OK

(4) Embankment present, water surface to bottom of cover slab (riser primed):

Allowable average pressure =	5.44 + 11.25 x 0.0624	= 6.14 ksf
Allowable maximum pressure =	6.44 + 11.25 x 0.0624	= 7.14 ksf
Previous	= 1095.6	= + 118
Water in riser 40 x 18.75 x 0.0624	= 46.8 x (− 2.75)	= − 129
Water over crest 224 x 1.25 x 0.0624	= 17.5 x (0)	= 0
Slab walls above crest − 29.5 x 0.0624	= −1.8 x (− 2.75)	= + 5
	1158.1 kips	− 6 ft kips

$M_{\not c}$ = 1125 − 6 = 1119 ft kips

$p_{max.} = \frac{1158}{224}\left(1 + \frac{6 \times 1119}{16 \times 1158}\right) = 5.17(1.362) = 7.05 < 7.14$ ksf, OK

$p_{aver.}$ = 5.17 < 6.14 ksf, OK

$p_{min.}$ = 5.17(0.638) = 3.30 > 0 ksf, OK

p_{uplift} = 0.0624 x 43.0 = 2.68 ksf

$p_{min.\ (net)}$ = 3.30 − 2.68 = 0.62 > 0 ksf, OK

(5) No embankment placed, moist soil condition:

Allowable average pressure = 0 + 2.00 = 2.00 ksf
Allowable maximum pressure = 0 + 4.00 = 4.00 ksf

Riser less footing	= 175.0 x (− 2.75)	= − 481
Footing	= 58.8 (0)	= 0
	233.8 kips	− 481 ft kips

$M_{\not c}$ = − 481 ft kips

$p_{max.} = \frac{234}{224}\left(1 + \frac{6 \times 481}{16 \times 234}\right) = 1.05(1.770) = 1.85 < 4.00$ ksf, OK

$p_{aver.}$ = 1.05 ksf < 2.00 ksf, OK

$p_{min.}$ = 1.05(0.230) = 0.24 > 0 ksf, OK

(6) Flotation criteria:

Will not count on buoyant weight of submerged embankment over footing projections unless needed.

$$\frac{\text{weight of riser}}{\text{weight of displaced water}} = \frac{233.8}{(1800.8 + 392)\ 0.0624} = \frac{233.8}{137.0}$$

$$= 1.7 > 1.5, \text{ OK}$$

Use 16 x 14 footing.

Footing Strength Design

Projection Loadings

The projection loadings are tabulated in the same order as the stability analyses.

(1)	Upstream	(7.62) − (1.75 x 0.15 + 30 x 0.14 = 4.46)	= 3.16 ksf	↑
	Downstream	(1.17) − (4.46)	= 3.29	↓
(2)	U	(6.35) − (4.46)	= 1.89	↑
	D	(2.43) − (4.46)	= 2.03	↓
(3)	U	(7.00) − (4.46 + 10 x 0.0624 = 5.08)	= 1.92	↑
	D	(2.82) − (5.08)	= 2.26	↓
(4)	U	(7.05) − (5.08 + 1.25 x 0.0624 = 5.16)	= 1.89	↑
	D	(3.30) − (5.16)	= 1.86	↓
(5)	U	(0.24) − (1.75 x 0.15 = 0.26)	= 0.02	↓
	D	(1.85) − (0.26)	= 1.59	↑

Design

Check on footing thickness required:

In downstream end of sidewall footing projection:

Shear: $d = \frac{3290(4.25 - d/12)}{70 \times 12}$

$d = 12.6$ in.

Moment: $M = 3.29(4.25)^2/2 = 29.7$ ft kips/ft

$d = 10.5$ in. for balanced stresses

$t_f \geq 12.6 + 2.5 = 15.1$ in.

In upstream endwall footing projection:

Pressure at face of endwall:

$$p = 3.16\left(\frac{x - 5.5}{x}\right) \quad \text{where} \quad x = \left(\frac{3.16}{3.16 + 3.29}\right) 16$$

thus $x = 7.85$ ft and $p = 0.95$ ksf

Shear: $d \approx \frac{(3160 + 950)}{2} \frac{(5.5 - d/12)}{70 \times 12}$

$d \approx 11.2$ in.

Moment: $M = 0.95(5.5)^2/2 + 2.21(5.5)^2/3 = 36.6$ ft kips/ft

$d = 11.7$ in. for balanced stresses

$t_f \geq 11.7 + 4.5 = 16.2$ in.

Assumed thickness is OK, use $t_f = 21$ in.

Determine footing steel required:

T & S requires $A_{s(min.)} = 0.002 \times 12 \times 16 = 0.38$ in^2/ft

Design of transverse steel (perpendicular to sidewall):

Top steel: $d = 21 - 2.5 = 18.5$ in.

Downstream:

$M = 29.7$ ft kips/ft

$A_s = 1.05$ in^2/ft

$\Sigma o = \frac{3290 \times 4.25}{245 \times 7/8 \times 18.5} = 3.53$ in./ft

Because of the unknown thickness of the spigot wall fitting, this steel should not be placed under the fitting but should be started ahead of the fitting. In order to provide the same total resistance, the maximum area required per foot will have to be increased to:

$$A_s = 1.05 \frac{(16 - 7.85)}{(16 - 7.85 - 1.5)} = 1.29 \text{ in.}^2/\text{ft}$$

Use short length #6@12, $A_s = 0.44$ in.^{2}/ft each side of fitting to provide for T & S. Use #6@4, $A_s = 1.33$ in.^{2}/ft for 2.5 ft starting ahead of fitting. Use #6@8, $A_s = 0.66$ in.^{2}/ft for next 2.5 ft, then use #6@12.

Upstream:

Use #6@12, $A_s = 0.44 > 0.38$ in.^{2}/ft

Bottom steel: $d = 21 - 3.5 = 17.5$ in.

Downstream:

$M = 1.59(4.25)^2/2 = 14.4$ ft kips/ft

$A_s = 0.53$ in.^{2}/ft

$\Sigma o = \frac{1590 \times 4.25}{350 \times 7/8 \times 17.5} = 1.26$ in./ft

Use #6@6, $A_s = 0.88$ in.^{2}/ft. $\Sigma o = 4.71$ in./ft,
Change to #6@12 at $16 - 16(0.44/0.53) = 2.7$ say 3 ft from downstream end of footing.

Upstream :

Use #6@12, $A_s = 0.44 > 0.38$ in.^{2}/ft

Design of longitudinal steel (perpendicular to endwall):

Top steel: $d = 21 - (2.5 + 1.0) = 17.5$ in.

Use #6@12, $A_s = 0.44 > 0.38$ in.^{2}/ft

Bottom steel: $d = 21 - (3.5 + 1.0) = 16.5$ in.

At face of upstream endwall:

$M = 36.6$ ft kips/ft

$A_s = 1.48$ in.^{2}/ft

$$V = \frac{(3.16 + 0.95)}{2}(5.5) = 11.3 \text{ kips}$$

$$\Sigma o = \frac{11300}{350 \times 7/8 \times 16.5} = 2.24 \text{ in./ft}$$

Use #7@6 and #6@12, $A_s = 1.64$ in.^{2}/ft, $\Sigma o = 7.86$ in./ft. Drop the #7@6 at anchorage distance downstream of the downstream face of endwall.

Design of footing steel for M_{VO} and V_{VO}:

At center of sidewall:

$M_{VO} = 24.9$ ft kips/ft, $V_{VO} = 13.8$ kips/ft

Assume two layers of steel:

$d = 21 - (3.5) - (1.0) = 16.5$ in.

$d'' = 21/2 - 4.5 = 6.0$ in.

$$M_{VO} + V_{VO}\left(\frac{D}{4} + \frac{t_f}{2}\right) = 24.9 + 13.8\,(0.625 + 0.875) = 45.6$$

$$V_{VO}\, d''/12 = 13.8\ (6.0/12) = \underline{6.9}$$

$$M_s = 52.5 \text{ ft kips/ft}$$

$A = 2.15$ in.^{2}/ft

$A_s = 2.15 - 13.8/20 = 1.46$ in^2/ft

#7@6 (continuous from sidewall to footing to sidewall) = 1.20

#6@12 (place the #7@6 2 in. above this steel) = 0.44

1.64 > 1.46 in^2/ft

Example Plans

Plans, consisting of a layout sheet and three structural detail sheets, for the riser designed in this example are shown on the following pages.

USDA-SCS-HYATTSVILLE, MD. 1969

USDA-SCS-HYATTSVILLE, MD. 1969

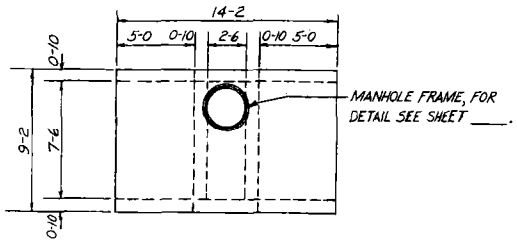

TOP PLAN

FOR DETAIL OF TRASHRACK ANGLES AND GRATING SEE SHEET ____.

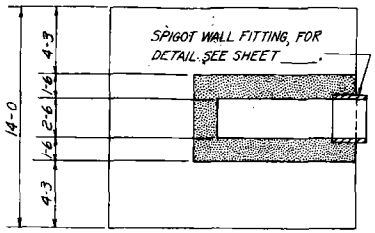

SECTION A-A

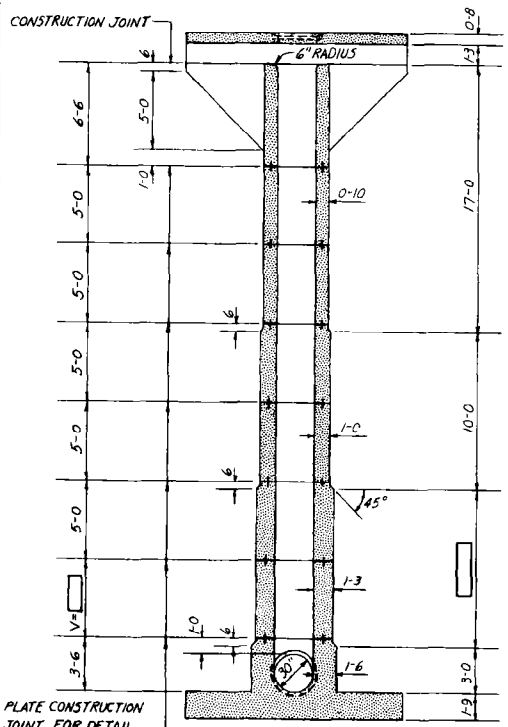

SECTION B-B

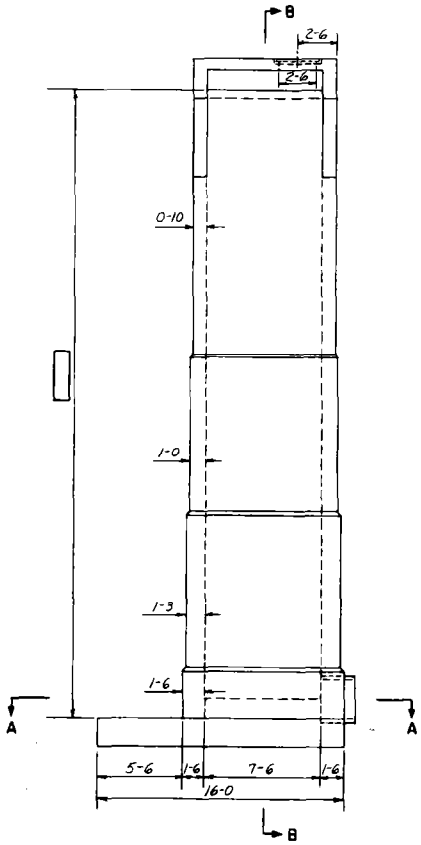

SIDEWALL ELEVATION

STEEL SCHEDULE

MARK	SIZE	QUANTITY	LENGTH	TYPE	B	C	TOTAL LENGTH
B1	6	20	13-6	1	—	—	270-0
B2	6	14	15-6	1	—	—	227-0
B3	7	26	7-10	1	—	—	203-8
B4	7	38	8-0	21	3-8	4-4	304-0
B5	6	14	15-6	1	—	—	227-0
B6	6	21	13-6	1	—	—	283-6
B7	6	4	6-0	1	—	—	24-0
B8	6	5	5-3	21	1-0	4-3	26-3
B9	6	3	7-8	21	1-0	6-8	23-0
B10	6	18	7-8	21	1-0	6-8	138-0
B11	6	2	5-3	21	1-0	4-3	10-6
B12	6	10	8-6	1	—	—	85-0
B13	6	4	3-6	1	—	—	14-0
B14	6	12	9-8	21	3-7	6-1	116-0
B15	6	4	7-5	21	1-4	6-1	29-8
B16	6	6	7-0	21	0-11	6-1	42-0
B17	6	2	7-10	21	1-9	6-1	15-8
B18	7	4	9-6	21	3-6	6-0	38-0
B19	7	38	4-8	1	—	—	177-4
B20	6	5	4-4	1	—	—	21-8
B21	6	2	4-4	1	—	—	8-8
B22	6	2	2-10	1	—	—	5-8
B23	6	2	2-10	1	—	—	5-8
R1	6	16		1	—	—	
R2	6	6		1	—	—	
R3	6	18		1	—	—	
R4	6	8		1	—	—	
R5	6		8-6	1	—	—	
R6	6		3-6	1	—	—	
R7	7		9-6	21	3-6	6-0	
R8	6	14	8-6	1	—	—	119-0
R9	6	10	3-6	1	—	—	35-0
R10	6	36	9-2	21	3-4	5-10	330-0
R11	6	18	4-0	1	—	—	72-0
R12	6	8	4-0	1	—	—	32-0
R13	6	4	8-8	21	3-1	5-7	34-8
R14	5	16	11-7	1	—	—	185-4
R15	5	6	11-7	1	—	—	69-6
R16	5	18	9-6	1	—	—	171-0
R17	5	8	9-6	1	—	—	76-0
R18	5	20	8-2	1	—	—	163-4
R19	5	10	3-2	1	—	—	31-8
R20	6	40	8-8	21	3-1	5-7	326-8
R21	5	14	8-2	1	—	—	114-4
R22	5	10	3-2	1	—	—	31-8
R23	5	36	8-4	21	2-11	5-5	300-0
R24	5	18	3-8	1	—	—	66-0
R25	5	8	3-8	1	—	—	29-4
R26	5	4	8-0	21	2-9	5-3	32-0
R27	5	14	11-7	1	—	—	162-2
R28	5	6	11-7	1	—	—	69-6
R29	5	14	11-7	1	—	—	162-2
R30	5	6	11-7	1	—	—	69-6
R31	5	12	8-2	1	—	—	98-0
R32	5	8	3-2	1	—	—	25-4
R33	5	36	8-0	21	2-9	5-3	288-0
R34	5	10	8-2	1	—	—	81-4
R35	5	8	3-2	1	—	—	25-4
R36	5	24	8-0	21	2-9	5-3	192-0
T1	5	14	6-0	1	—	—	84-0
T2	5	6	8-0	1	—	—	48-0
T3	5	14	6-3	1	—	—	87-6
T4	5	6	8-0	1	—	—	48-0
T5	5	10	8-2	1	—	—	81-8
T6	5	4	3-2	1	—	—	12-8
T7	5	2	6-2	1	—	—	12-4
T8	5	2	8-8	1	—	—	17-4
T9	5	2	11-2	1	—	—	22-4
T10	5	2	13-8	1	—	—	27-4
T11	5	24	8-0	21	2-9	5-3	192-0
T12	5	4	6-2	1	—	—	24-8
T13	5	4	4-11	1	—	—	19-8
T14	5	4	3-8	1	—	—	14-8
T15	5	4	2-5	1	—	—	9-8
T16	5	4	8-11	19	1-11	7-0	35-8
T17	5	4	3-2	1	—	—	12-8
T18	5	2	6-2	1	—	—	12-4
T19	5	2	8-8	1	—	—	17-4
T20	5	2	11-2	1	—	—	22-4
T21	5	2	13-8	1	—	—	27-4
T22	5	4	6-2	1	—	—	24-8
T23	5	4	4-11	1	—	—	19-8
T24	5	4	3-8	1	—	—	14-8
T25	5	4	2-5	1	—	—	9-8
T26	5	4	8-11	19	1-11	7-0	35-8
T27	5	2	13-8	1	—	—	27-4
T28	4	14	8-2	1	—	—	114-4
T29	4	2	4-8	1	—	—	9-4
T30	4	7	13-8	1	—	—	95-8
T31	4	4	5-4	1	—	—	21-4
T32	5	24	6-10	21	1-8	5-2	164-0
T33	5	2	6-7	21	1-8	4-11	13-2
T34	5	2	2-6	21	1-8	0-10	5-0
T35	5	2	13-8	1	—	—	27-4
T36	4	7	13-8	1	—	—	95-8
T37	4	4	5-4	1	—	—	21-4

QUANTITIES

STEEL:

#4 BARS	—	357-8	—	239 LBS.
#5 BARS	—	3614-2	—	3770 LBS.
#6 BARS	—		—	LBS.
#7 BARS	—		—	LBS.
				LBS.
CONCRETE = 51.9 + 1.16V =				CU.YDS.

LENGTH OF #6 BARS = (2522-7) + (LENGTH OF BARS R1 THROUGH R6).
LENGTH OF #7 BARS = (723-0) + (LENGTH OF BARS R7).

STANDARD COVERED RISER		
DESIGN CONSTANTS	f'_c = 4000 psi, n = 8	f_c = 1600 psi, f_s = 20,000 psi
STANDARD DWG. NO.	ES- EXAMPLE	
DATE 1-65	SHEET 1 OF 4	

0 2 4 6
SCALE IN FEET

EXAMPLE PLANS
STANDARD COVERED RISER

U.S. DEPARTMENT OF AGRICULTURE
SOIL CONSERVATION SERVICE

Designed ESA	Date 1-65	Approved by	Title
Drawn ESA	1-65		
Traced		Title	
Checked		Sheet No. of	Drawing No.

Form SCS-313 (November 1955)

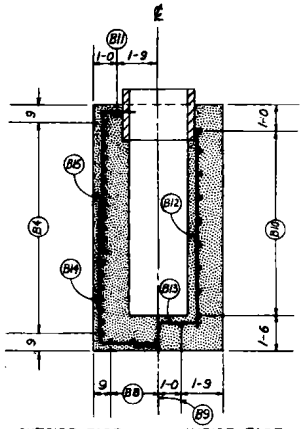

SECTION A – A

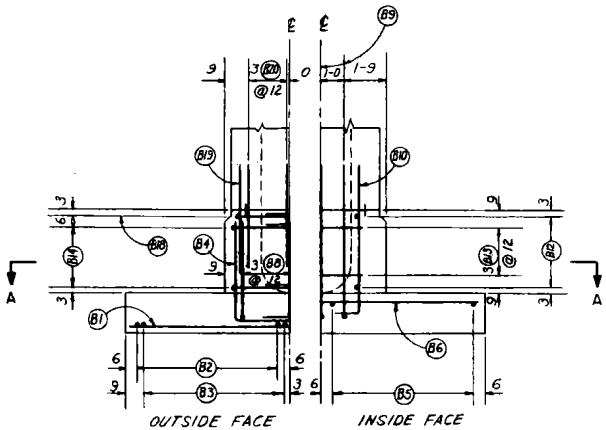

UPSTREAM ELEVATION

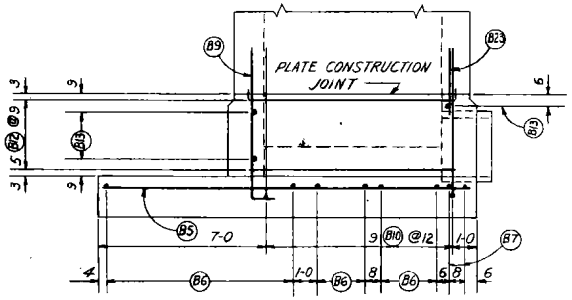

STEEL 2" FROM INSIDE FACE OF RISER AND 2" FROM TOP OF FOOTING

SIDEWALL ELEVATION

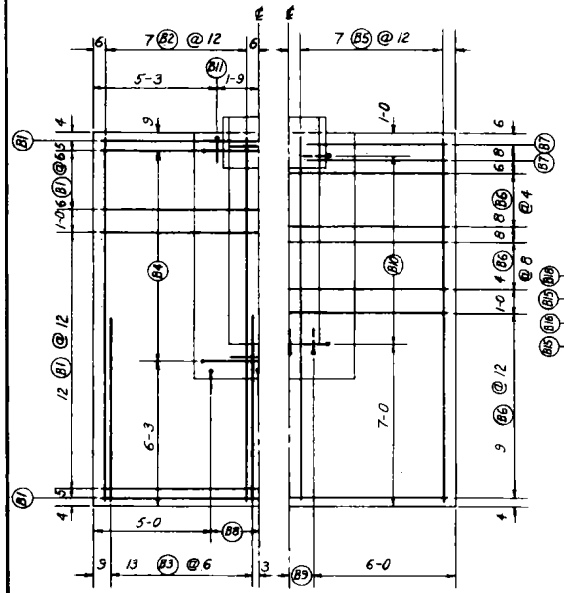

STEEL 3" FROM BOTTOM OF FOOTING

STEEL 2" FROM TOP OF FOOTING

FOOTING PLAN

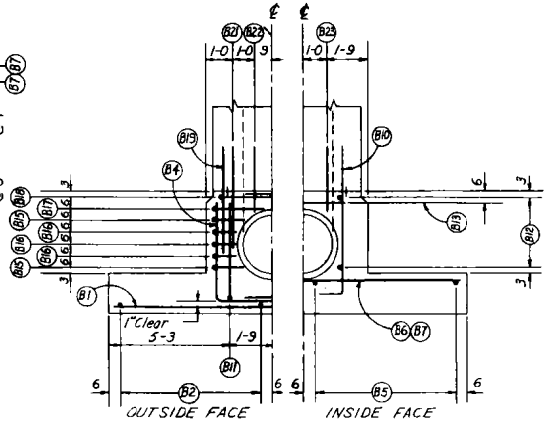

DOWNSTREAM ELEVATION

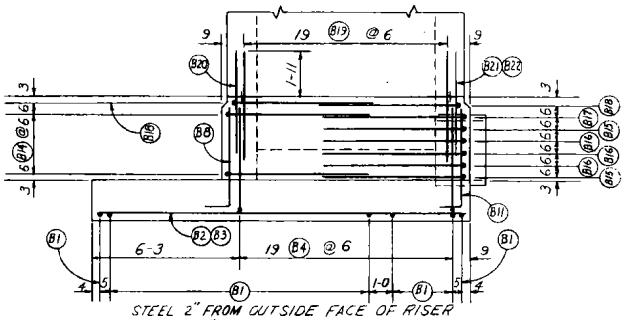

STEEL 2" FROM OUTSIDE FACE OF RISER AND 3" FROM BOTTOM OF FOOTING

SIDEWALL ELEVATION

STANDARD COVERED RISER	
DESIGN CONSTANTS	f'_c = 4000 psi, f_c = 1600 psi, n = 8, f_s = 20,000 psi
STANDARD DWG. NO.	ES- EXAMPLE
DATE 1-65	SHEET 2 OF 4

0 2 4 6
SCALE IN FEET

EXAMPLE PLANS
STANDARD COVERED RISER

U. S. DEPARTMENT OF AGRICULTURE
SOIL CONSERVATION SERVICE

Designed ESA	Date 1-65	Approved by	
Drawn ESA	1-65	Title	
Traced		Title	
Checked		Sheet No. of	Drawing No

Form SCS-313 (November 1955)

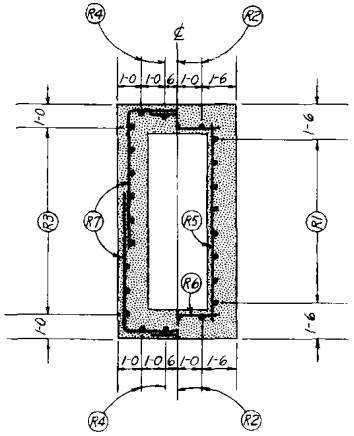

SECTION A-A

OTHER SECTIONS SIMILAR

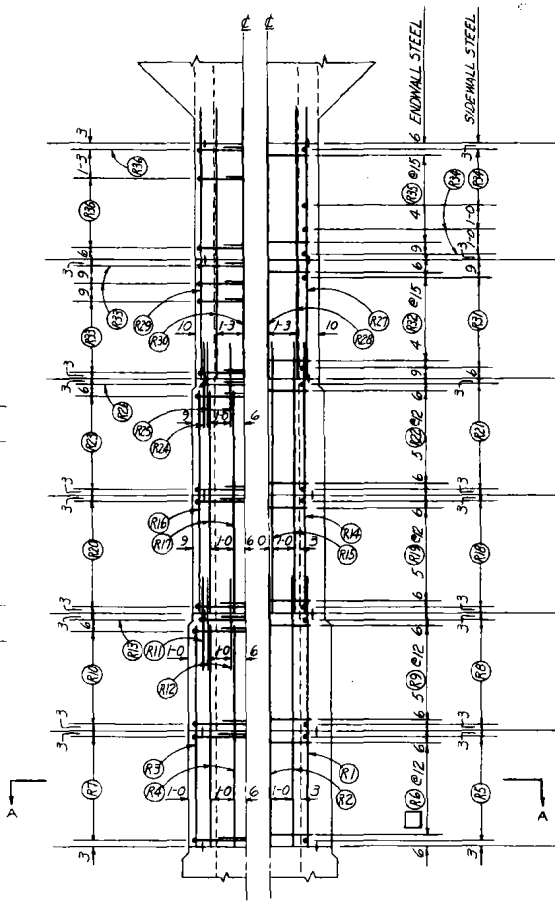

ENDWALL ELEVATION

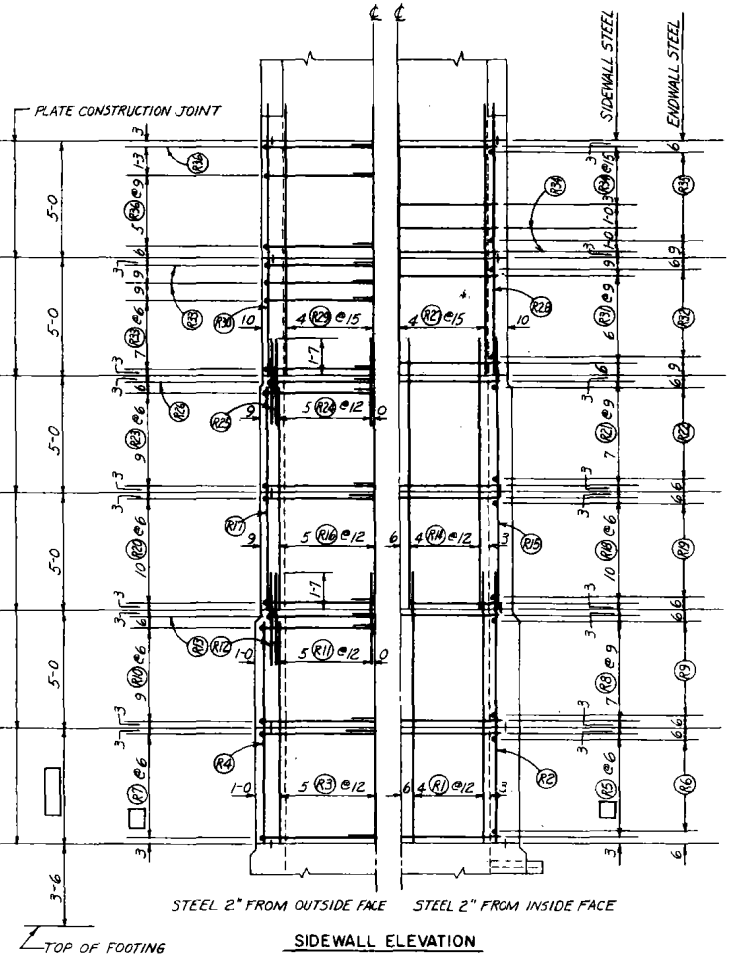

SIDEWALL ELEVATION

0 2 4 6
SCALE IN FEET

STANDARD COVERED RISER		
DESIGN CONSTANTS	f'_c = 4000 psi n = 8	f_c = 1600 psi f_s = 20,000 psi
STANDARD DWG. NO.	ES- EXAMPLE	
DATE 1-65	SHEET 3 OF 4	

EXAMPLE PLANS
STANDARD COVERED RISER

U. S. DEPARTMENT OF AGRICULTURE
SOIL CONSERVATION SERVICE

Designed ESA	Date 1-65	Approved by	
Drawn ESA	1-65	Title	
Traced		Title	
Checked		Sheet No. of	Drawing No.

Form SCS-313 (November 1955)

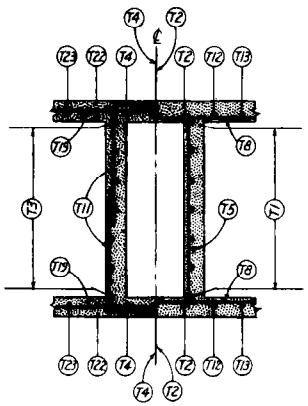

OUTSIDE FACE INSIDE FACE

SECTION A-A

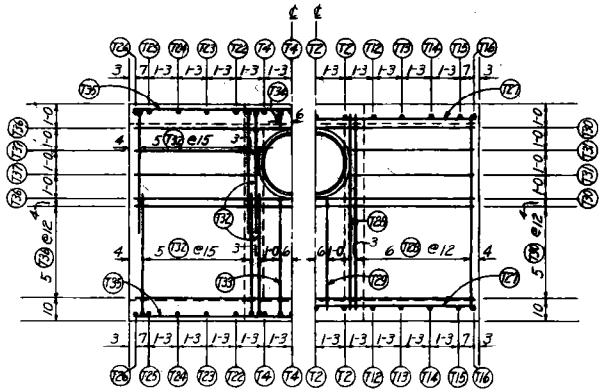

STEEL 2" FROM TOP OF SLAB STEEL 2" FROM BOTTOM OF SLAB

COVER SLAB PLAN

RISER WALL STEEL NOT SHOWN

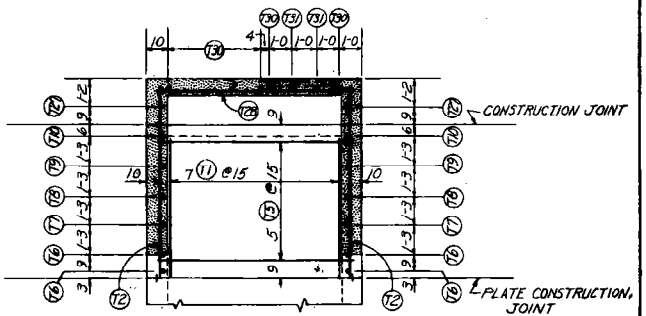

STEEL 2" FROM INSIDE FACE

SECTION B-B

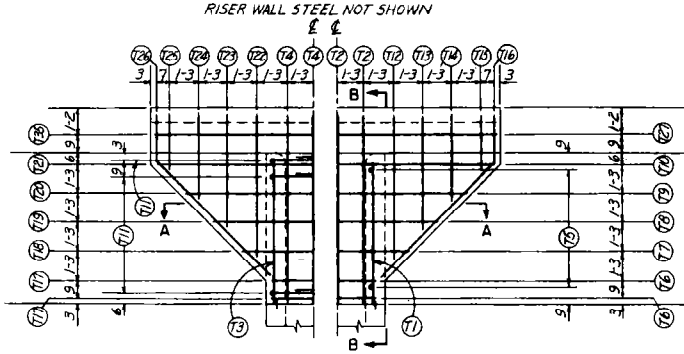

STEEL 2" FROM OUTSIDE FACE STEEL 2" FROM INSIDE FACE

ENDWALL ELEVATION

COVER SLAB STEEL NOT SHOWN

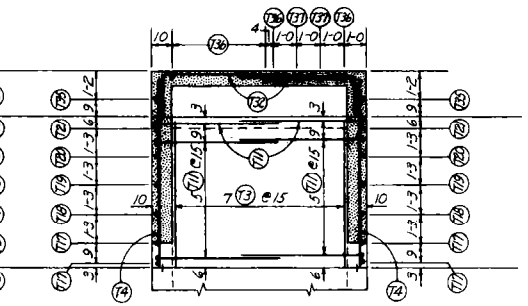

STEEL 2" FROM OUTSIDE FACE

SECTION B-B

BAR TYPES

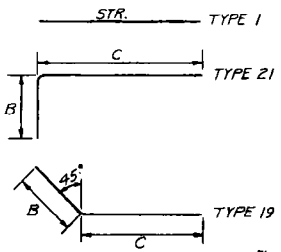

NOTE:
1. BAR DIMENSIONS ARE OUT TO OUT OF BAR
2. RADIUS OF BENDS:
   = 3 BAR DIAMETERS FOR SIZES ≤ #7
   = 4 BAR DIAMETERS FOR #8
3. THE 2" AND 3" DISTANCES FROM SPECIFIED CONCRETE SURFACES ARE CLEAR DISTANCES

0 2 4 6
SCALE IN FEET

STANDARD COVERED RISER		
DESIGN CONSTANTS	f'_c - 4000 psi n = 8	f_c - 1600 psi f_s - 20,000 psi
STANDARD DWG. NO.	ES- EXAMPLE	
DATE 1-65	SHEET 4 OF 4	

EXAMPLE PLANS
STANDARD COVERED RISER

U. S. DEPARTMENT OF AGRICULTURE
SOIL CONSERVATION SERVICE

Designed	ESA.	1-65	Approved by
Drawn	ESA.	1-65	Title
Traced			Title
Checked			Sheet / Drawing No.

Form SCS-313 (November 1959)