United States
Department of
Agriculture

Soil
Conservation
Service

National Engineering Handbook

Section 3

Sedimentation

Chapter 7

Field Investigations and Surveys

Contents

	Page
General	7-1
Reservoir sedimentation surveys	7-1
Purpose	7-1
General plan	7-2
Safety measures	7-2
Selecting reservoirs	7-3
Scheduling	7-3
Equipment	7-4
Boat and associated equipment	7-4
Range-cable equipment	7-5
Sounding equipment	7-6
Equipment for measuring thickness of sediment	7-7
Equipment for determining specific weight of sediment	7-9
Survey methods	7-10
Range survey	7-11
Contour survey	7-14
Contour-range survey	7-14
Measuring thickness of sediment	7-14
Sampling for volume-weight of sediment	7-15
Direct measurement of volume-weight	7-16
Notekeeping	7-16
Recording measurements	7-16
Sediment samples	7-18
Fathometers	7-18
Computing water capacity and sediment volume	7-18
Range method	7-19
Contour method	7-24
Contour-range method	7-25
Land surveys	7-25
Survey reports	7-27
Outline	7-30
Record maintenance	7-31
Flood-plain damage surveys	7-31
Purpose and objectives	7-31
Preliminary sedimentation investigations	7-31
Detailed sedimentation investigations	7-32
Developing the plan	7-32
Boring and logging	7-32
Interpreting test-hole data	7-32
Survey methods	7-33
Mapping method	7-33
Range method	7-34
Deposition and scour damages	7-39
Equilibrium damages	7-39
Increasing damages	7-39
Decreasing damages	7-39
Channel erosion damages	7-39
Swamping damages	7-40
References	7-43

Figures

		Page
7–1.	Reel without brake for range cable	7-5
7–2.	Reservoir-surveying equipment	7-6
7–3.	Color-code markings for sounding lines	7-7
7–4.	Bell-shaped sounding weight	7-8
7–5.	Fathometer showing recorded depths of range cross section	7-9
7–6.	Sediment-sampling spud and carrying case	7-9
7–7.	Piston-type sediment-sampling tube	7-10
7–8.	Sediment density probe	7-10
7–9.	Example of range layout	7-12
7–10.	Notes from the measurement of a range	7-17
7–11.	Notes for sediment sample	7-18
7–12.	Computation sheet for determining range area	7-19
7–13.	Instructions for computing reservoir—range method	7-21
7–14.	Computing reservoir capacity—range method	7-22
7–15.	Methods of determining "h" values	7-23
7–16.	Reservoir capacity—contour method	7-26
7–17.	Stage-area curve	7-27
7–18.	Reservoir sediment-data summary	7-28
7–19.	Flood-plain damage survey	7-35

Tables

		Page
7–1.	Flood-plain damage and estimated recovery period related to depth and texture of sediment deposit	7-33
7–2.	Type and extent of physical land damage	7-36
7–3.	Summary of flood-plain damage, Reach B	7-36
7–4.	Sample worksheet for range data summary	7-36
7–5.	Computation of the weighted averages of types of damage, Reach A	7-37
7–6.	Reach damage summary from range data	7-38
7–7.	Summary of flood-plain damage, Reach A	7-41

Chapter 7
Field Investigations and Surveys

General

Soil Conservation Service geologists are responsible for making field investigations and surveys concerning sedimentation, especially the effect of sediment accumulation on SCS projects and, conversely, the effect SCS projects can be expected to have in reducing sediment yields. The procedures and techniques necessary for carrying out these investigations have been developed by SCS. They can be learned through on-the-job training or through workshops, formal training sessions, and study of technical releases and handbooks. This chapter is intended to provide guidance in surveying sediment deposition in reservoirs and on flood plains.

The field work associated with obtaining information on sheet and channel erosion is described in Chapter 3, Erosion.

The measurement of suspended-sediment loads is not a primary function of SCS. Such data have been collected by several federal agencies and others. One source is the Index to Water-Data Acquisition (U.S. Geological Survey 1979).

Reservoir Sedimentation Surveys

Procedures for measuring the volume of sediment in a reservoir were established by SCS in 1935 in connection with a nationwide study of reservoir sedimentation (Eakin 1939). Many of these procedures, with some modifications, are still used by SCS and other federal and state agencies. Since SCS is mainly concerned with small watersheds, the discussion of methods, procedures, and equipment in this chapter is limited to those that can be adapted to relatively small reservoirs.

Purpose

The primary purpose of a reservoir sedimentation survey is to determine the volume and weight of sediment accumulated between surveys or during the recorded period of storage. This information may be needed to:

1. Estimate sediment yield for given watersheds or land resource areas.
2. Evaluate sediment damage.
3. Provide basic data for planning and designing reservoirs.
4. Evaluate the effects of watershed protection measures.

5. Determine the distribution of sediment in a particular reservoir.
6. Predict a reservoir's life expectancy or period of useful operation.

General Plan

The fieldwork needed depends on the choice of surveying methods and may include aerial and topographic mapping, locating ranges, sounding and leveling range cross sections, and directly measuring and sampling sediment deposits.

Office work includes preparing a reservoir map, computing the area of cross sections, measuring the surface area of segments, and computing the original capacity and sediment volume.[1] Additional information can be obtained from topographic maps and aerial photos; examples include measurements of the total drainage area and the net sediment-contributing area, determination of the type and area of various land uses, and data for computing erosion. Preparing a reservoir sediment summary sheet and occasionally a formal report completes the office work.

The volume of sediment in a reservoir can be determined by directly measuring the volume of sediment deposits or by determining the reservoir's present capacity and subtracting this from its original capacity.

For the best results from the second method, an accurate map of the original reservoir basin is essential. If such a map is not available, one must be constructed. A map made about the time the dam is closed is desirable, but such maps usually are not available for the smaller and older reservoirs. Any error in determining the original capacity will cause a corresponding error in the computed volume of sediment. Even though the difference between the estimated original capacity and the true original capacity may be relatively small in terms of total capacity, this difference could cause a considerable error in the estimated volume of sediment in a reservoir if that volume is small in comparison with the total original capacity.

If a map of the original reservoir basin is not available or if there is doubt about its accuracy, the volume of sediment deposits and the present storage capacity should be measured directly. The sum of these two volumes below crest elevation is the reservoir's original storage capacity.

[1] *The procedures are explained on pages 41 to 53. Computer programs are available to reduce the amount of manual computation.*

Safety Measures

All safety regulations and practices prescribed in SCS safety handbooks and guides must be followed.

In any work done on or around water, precautions must be taken against drowning. Every employee working from a boat must be able to pass a standard Red Cross swimming test, and all boat occupants must wear life preservers. The cushion-type preserver provides comfort in the boat but is suitable only as a supplement to the vest-jacket preserver, which has been approved by the Coast Guard as being the safest type of preserver. It is effective even if a person becomes unconscious, but some models are cumbersome and hot. An improved inflatable type is being used on SCS surveys. For recommendations and details on these vest-jacket preservers, contact the Safety Officer, SCS, P.O. Box 2890, Washington, D.C. 20013.

State boating laws range from general safety requirements to requiring a state permit to own or operate a boat. Reservoir-surveying parties must know and observe all state boating laws.

Releasing the tension on the range cable is a potentially dangerous step in the range survey procedures. The ratchet of the reel must be unlocked before the cable is rewound after all the measurements have been made. Be careful in releasing the tension because the crank handle can spin and break any bones in its path.

Wear gloves when handling the range cable to prevent injury from small steel slivers of broken cable strands. Cost, delay, and danger can result if a cable is snagged on a lake-bottom obstruction or becomes snarled in the propeller of the outboard motor. Floats to support the cable help reduce these problems. A cable stretched across a range line may be under considerable tension. Personnel near the reel or near the opposite end of the cable should remain well to the side of the cable and never be directly in line with or behind the cable fastening. Backlash from a cable that suddenly gives way can cause serious injury.

Lines for sounding and sediment sampling are other sources of accidents. They should be free to

run out without entanglement when spuds are thrown over the side or when sampling equipment is lowered. Keep the lines in good condition and attached securely. Replace frayed lines before a parted line can cause loss of equipment and create additional hazards during attempts to recover the lost equipment. If range lines are used on lakes with boat traffic, clearly flag the lines to warn other boats to stay clear.

It is impractical to list all the boating practices that may be dangerous. Obeying the following rules should ensure safety:

1. Do not use boats that are less than 14 ft long, easily capsized, or in danger of sinking.
2. Do not overload boats.
3. Do not use a motor too large for the boat.
4. Go ashore during storms.
5. In general, use common sense in making surveys on and around water.

In some northern states, reservoir sedimentation surveys are made during the winter through ice. Such surveys should be undertaken only after determining that the ice is thick enough to support the personnel and equipment to be used. The following general guidelines were developed by the Snow, Ice, and Permafrost Research Establishment (SIPRE), U.S. Army Corps of Engineers, for moving weights on clear, sound, fresh-water ice:

Load	Ice thickness
One person on foot	2 in.
Passenger car, 2 tons gross	7-1/2 in.
Light truck, 2-1/2 tons gross	8 in.
Medium truck, 3-1/2 tons gross	10 in.
Heavy truck, 7 to 8 tons gross	12 in.

Slightly thicker ice is required to support parked loads. The first cracking need not cause concern. The bearing capacity of ice is substantially higher than the load that produces the first crack and there is ample warning before the ice fails. Prolonged application of a load, however, produces failure; quick loading or moving the load around reduces the danger. If sagging is noticeable, remove the load.

Use extreme caution after spring melt begins. Survey through ice only in periods of moderation in wintry weather. Windy, stormy, or intensely cold weather is not conducive to safe, accurate surveys.

Special safety precautions must be taken on surveys requiring instruments that contain radioactive elements. Details on equipment and authorization for use may be obtained from the national technical center (NTC) sedimentation geologist.

Selecting Reservoirs

The reservoirs selected depend on the purpose of the survey. The following criteria should be considered when planning reservoir sedimentation surveys to obtain basic data on sediment yield for use in planning or design.

Select reservoirs draining watersheds that are typical of or similar to those in which the proposed structure is to be located. Thus, the watershed of a reservoir to be surveyed should be no more than twice nor less than half the area of the watershed above the proposed structure. Furthermore, the topography and land use should be similar unless suitable detailed soil, slope, and cover data for the watershed are available to allow the yield to be adjusted in accordance with established procedures.

Study the history of the reservoir before starting a field survey to be sure that the date storage began is known; that the dam has not been breached, causing the loss of unknown volumes of sediment; and that the volume of any sediment removed by dredging or other means can be determined with reasonable accuracy. Unless measurements of sediment outflow are available, avoid surveying reservoirs that have a low trap efficiency. Avoid surveying reservoirs with short-term records unless periodic resurveys are planned.

Take advantage of any opportunity to survey a reservoir when it has been drained for purposes such as fish management. Measurements of sediment and present storage capacity are more accurate, and the time required for the survey is less, for a drained than for a full reservoir.

Get permission from the reservoir owners or operators before starting a sedimentation survey.

Scheduling

SCS state staffs may survey and periodically resurvey the sediment accumulation in selected floodwater-retarding and multiple-purpose reservoirs built under SCS supervision. Send a data summary sheet (Form SCS–ENG–34) immediately

to the sedimentation geologist of the responsible NTC. The data obtained will expand our knowledge of sedimentation processes, especially the sediment yield, distribution of sediment deposits within reservoirs, and, at times, sediment sources. This information will provide important design criteria and enable more accurate cost estimates of any planned structure. Collection and evaluation of information on the effect of dams on downstream channel reaches and downstream reservoirs are also valuable.

Before starting a survey, often during construction of the dam, establish two permanent bench marks. For convenience, place at least one on the centerline of the dam. To avoid any settling that could affect its elevation, place the bench mark on nonfill material. Before the reservoir is filled, prepare a contour map of the reservoir below the emergency spillway elevation. A geologist familiar with sedimentation survey procedures should locate the ranges to be surveyed as a part of the after-construction survey. The geologist should recognize any topographic irregularities that might influence deposition and the accuracy of subsequent surveys. A contour interval of 2 ft is generally used; use of 1-ft intervals increases the precision of the surveys.

If there is no original contour map of the reservoir, make a survey immediately after the structure starts to function. The date that the principal spillway discharges water is usually considered the beginning of the structure's normal operation. For dry dams, normal operation begins when major construction in the site area is completed.

Resurveys are desirable 5 and 10 years after the initial survey at 10-year intervals thereafter. Additional surveys should be made after major storms. For this purpose, a major storm is considered one in which precipitation equals or exceeds the amount expected from a 10-year-frequency rainfall of 6 hr duration. Data on the amount of precipitation for such a storm anywhere in the United States can be obtained from a hydrologist or from U.S. Weather Bureau (1961, Chart 32).

Equipment

If an accurate sedimentation survey of a reservoir is desired and the reservoir has not been surveyed before, it is necessary to establish engineering control by using standard surveying procedures. Equipment used may include a transit or a plane table and alidade, a stadia rod, a plotting scale, a notebook, a base map or aerial photograph if available, and other materials ordinarily used in engineering surveys. A dry reservoir can be surveyed with this equipment plus a soil auger for measuring sediment thickness and equipment for obtaining undisturbed samples for volume-weight determination. In making surveys through ice, either a hand or power auger or an ice chisel can be used to make holes in the ice. Chain saws can do the job but may be hazardous for those unfamiliar with their operation.

The following additional equipment is needed if part or all of the reservoir basin is submerged:

1. Boat and associated equipment.
2. Range-cable equipment.
3. Sounding equipment.
4. Equipment for measuring thickness of sediment.
5. Equipment for sampling or determining specific weight of sediment.

Boat and Associated Equipment

A 14-ft, flat-bottom, lightweight, shallow-draft boat is most practical for reservoir sedimentation surveys. An outboard motor greatly expedites work for reservoirs of several acres or more. A well in the boat eliminates the need to work over the side. The following are specification guidelines for a satisfactory boat:

1. Length, 14 ft or longer.
2. Center width, 4 ft.
3. Construction, magnesium or aluminum with styrofoam-filled compartments under the seats.
4. Sidewalls, 20 in. high and ribbed for reinforcement against strain.
5. Bottom, flat or shallow "v".
6. Flooring, flat bottom or bottom covered with removable wood grating (sometimes called duckboards).
7. Oarlocks, placed to give maximum rowing efficiency.
8. Transom, constructed of material able to carry an outboard motor.

A two-wheel boat trailer is desirable for transporting a 16-ft or longer boat, although such boats can be transported by truck. Smaller, lightweight boats can be transported satisfactorily

by station wagon or on securely anchored car-top racks.

It is efficient to use two boats on some surveys. One boat can be used for moving equipment, running errands, and locating range ends and the other for sounding, spudding, and sampling.

Range-Cable Equipment

For economy, expediency, and accuracy, SCS has long used the range-cable survey method for small reservoirs. This method permits locating soundings on a map or aerial photograph and reduces the size of the crew required for the survey.

The equipment includes a reel, cable, and line meter. The recommended reel holds at least 2,500 ft of 3/32-in.-diameter airplane cable. Secure the cable at each side of the reservoir while sounding the range. A ratchet assembly prevents the reel from unwinding (fig. 7–1). A line meter is used to measure the length of cable passing through the meter. Mount the reel on a short plank or board that can be fastened in the boat or secured on shore at one end of a survey range. Handles mounted on the plank increase safety and convenience when moving the reel and cable. Since this equipment is used in connection with the range type of survey, instructions for its use are included in the discussion of range surveys.

Some of this equipment is not available as standard equipment and must be fabricated. The following notes will help in assembling the parts.

Reel.—Figure 7–1 is a drawing of an aluminum reel developed jointly by the U.S. Army Corps of Engineers and the U.S. Geological Survey. This reel is unavailable with or without a brake. A brake, however, is recommended as a safety feature. The reel is available from U.S. Geological Survey, WRD, Gulf Coast Hydroscience Center, Hydrologic Instrumentation Facility, Bldg. 2101, NSTL Station, MS 39529. The stock number for the reel with brake is 1304001.

A 2-hp, 4-cycle engine and set of belts can be used for rapid rewinding of the cable. This engine reduces both the labor and the time required to wind the cable, but it also reduces the reel's portability.

Cable.—The cable ordinarily used by SCS personnel is galvanized aircraft cable with 3/32-in. outside diameter (O.D.) and 7 × 7 construction; it is available commercially.

A plastic water-ski tow cable of 1/4-in. diameter has been used with good results. It is made of polyethylene fibers and has a tensile strength of 1,100 lb. This lightweight cable, 1 lb/100 ft, floats on the water and can be obtained at most sporting-goods stores. It is a braided rope that does not form loops readily. It breaks if hit by a high-speed boat, but if broken, it can be repaired easily by telescoping one end into the other.

One disadvantage of this plastic cable is that it is deflected by winds. If the ranges are 800 to 900 ft

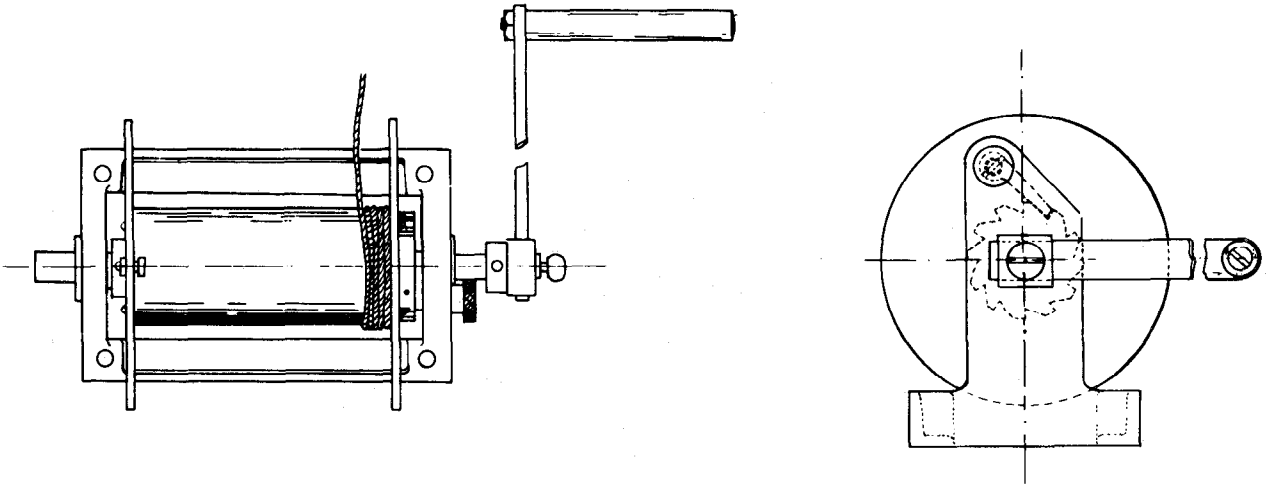

Figure 7–1.—Reel without brake for range cable.

long, consider the velocity and direction of the wind. Run the longer ranges during calm periods or when the wind approximately parallels the range. Ranges as long as 3,300 ft have been run satisfactorily with this plastic cable on very calm days.

A 3/32-in., 7 × 7 steel cable coated with nylon to 1/8-in. O.D. is also available. The coating eliminates the undesirable fraying associated with uncoated steel cable, but it also reduces the length of cable that can be wound on the reel by about 50 percent.

Line meter.—Line meters with hardened steel sheels or wheels coated with urethane are recommended. Several types of open-throat line meters that can easily be detached from the range cable are available, and they have a definite advantage over those that cannot be detached.

Other items.—Sheaves, cable guides, and weed strippers can be fabricated from items available at most hardware stores, mail-order houses, and marine supply companies.

Empty screw-capped gallon tin cans or plastic containers can be used to support the steel cable on long ranges. One float per 200 ft of line is enough to keep the cable afloat. Range cable equipment is shown in figure 7–2.

Two-way radios can be used to expedite surveys.

Sounding Equipment

Any of several types of sounding equipment can be used, depending on conditions. SCS personnel commonly use a sounding line and weight, a sounding pole, or an echo-sounding instrument. Bronze-core rope sounding lines are best suited for use by SCS personnel. If soundings are to be made in deep water, use wire lines for boat-mounted, manually operated reels with registering sheaves. Most reservoirs surveyed are relatively small, with a water depth of 50 ft or less, so hand-line sounding with a rope sounding line is practical; this method is faster and requires less equipment than wire-line sounding. A cotton-covered, bronze-core tiller rope of 1/4-in. diameter is recommended because of its durability and ease in handling (fig. 7–2). Cure the rope sounding lines (soak and dry under tension) before painting them.

Mark rope sounding lines in color at 0.5-ft intervals to identify the 0.5-ft, 1.0-ft, and 5.0-ft markers and each subsequent 10-ft interval marker (fig. 7–3). Water depth can be measured accurately to 0.5 ft and estimated to the nearest 0.1 ft (Gottschalk 1952). Use a high-grade, water-resistant enamel, preferably one of the synthetics that come in a variety of colors. Before painting a new line, remove the waterproof coating from the areas to be painted and outline the marks with masking tape. The single stripes for the 0.5-ft marks should be 0.5 in. wide and all other stripes 1 in. wide. Stripes in a group should be 0.25 in. apart. Use the center of a stripe or group of stripes as the reference point for measuring. Provide enough unpainted line to attach the sounding line to the weight.

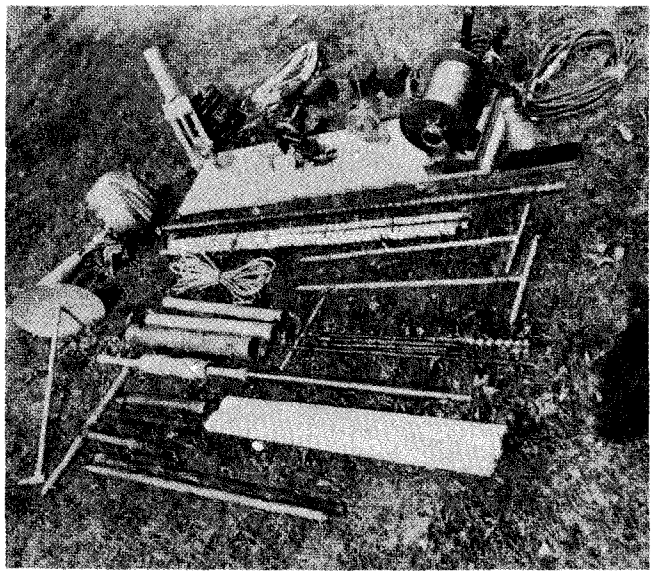

Figure 7–2.—Reservoir-surveying equipment.

Sounding weights are bell-shaped and made of cast aluminum (fig. 7–4). For water less than 100 ft deep, use a 5-lb aluminum weight; for water deeper than 100 ft, a 9-lb weight is best. The 9-lb weight is the same size as a 5-lb aluminum bell but is filled with lead.

Never tie the lines directly to the sounding weight. Use a clevis, snaphook, or oval galvanized metal thimble to protect the lines against wear. If using a clevis, the type with the pin held in place by a cotter key is better insurance against loss of equipment than one with a screw-type pin. Check sounding lines frequently to avoid inaccuracies caused by stretching or shrinking of the line. Discard a line if a constant error of more than 1 percent is observed.

Another device for determining water depth is a

sounding pole. Use a sounding pole no more than 30 ft long, because a longer pole is awkward to handle. A sectional thin-wall conduit, 1 in. in diameter, is satisfactory. The sections are 5 ft long and are fastened together with threaded dowels. The pole is lightweight aluminum, and the length can be changed easily by adding or removing sections.

Round plates of various diameters can be fastened to the butt of the pole to aid in identifying sediment surfaces of various softness. These plates can be designed to retract when additional pressure is applied. Sounding poles can also be made of wood. Wood closet rods or windmill pump rods are usually available at local lumberyards and can be made into serviceable sounding rods. The length available usually does not exceed 18 ft, but these poles are lightweight and float if dropped overboard. Mark these sounding poles either by color code or by painting in the numbers.

A fathometer provides a practical and rapid method of measuring water depth. A fathometer is a portable, graphic-recording, echo-sounding instrument designed for measuring depth from a boat (fig. 7–5). It consists of three separate units. The first unit, called the transducer or fish, is attached to the side of the boat and submerged just below the water surface. It emits and receives sonic waves. The time a wave takes to travel to the bottom of the reservoir and return indicates the depth of the water. The recorder, the second unit, is in an aluminum case containing the recording apparatus, paper, amplifier, and phasing and keying circuits. The third unit, an automobile-type battery of appropriate voltage, supplies the necessary power.

One advantage of the fathometer over hand sounding is that it records a continuous cross section of the range instead of a single depth every 20 ft or so. If it is operated from a boat moving at a uniform speed along a range, a constant-scale profile is obtained. When sounding by hand, a thalweg or other depth irregularity can be missed.

Check the calibration of the fathometer from time to time by hand sounding. Although nonrecording depth indicators are available at a fraction of the cost of a fathometer, they are subject to error and are not recommended.

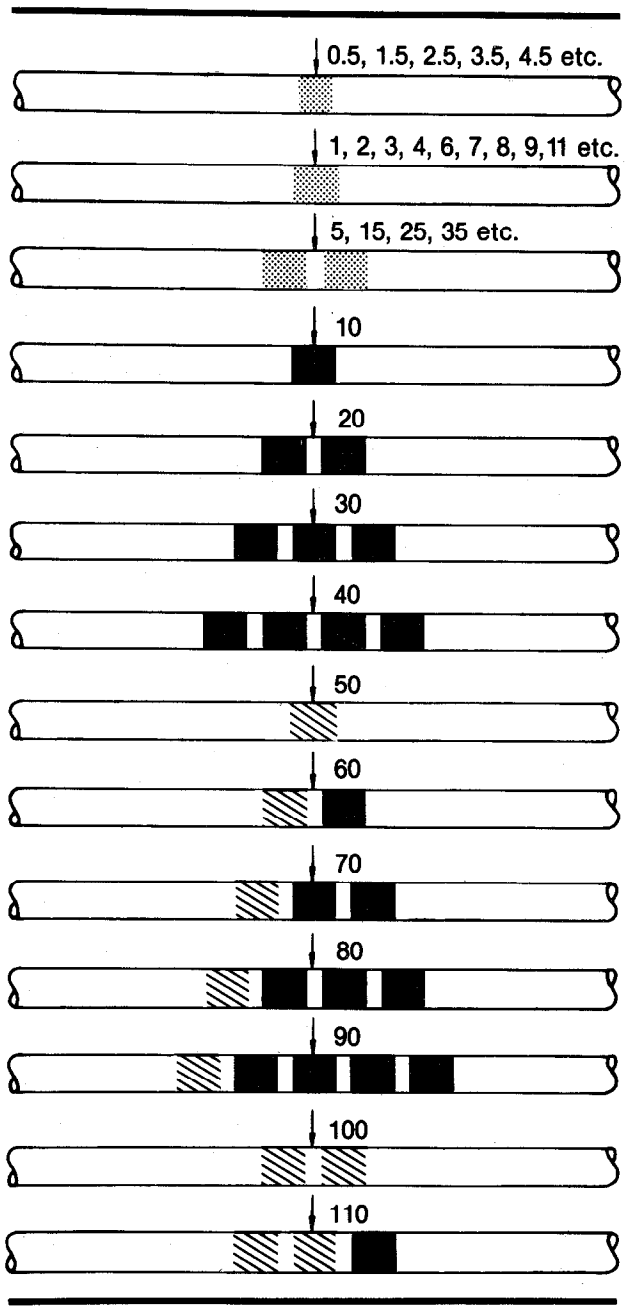

Figure 7–3.—Color-coded markings for sounding lines (in feet).

Equipment for Measuring Thickness of Sediment

If accurate maps of the original reservoir basin are not available, the thickness of accumulated sediment must be measured directly to determine the original capacity and sediment volume. A spud,

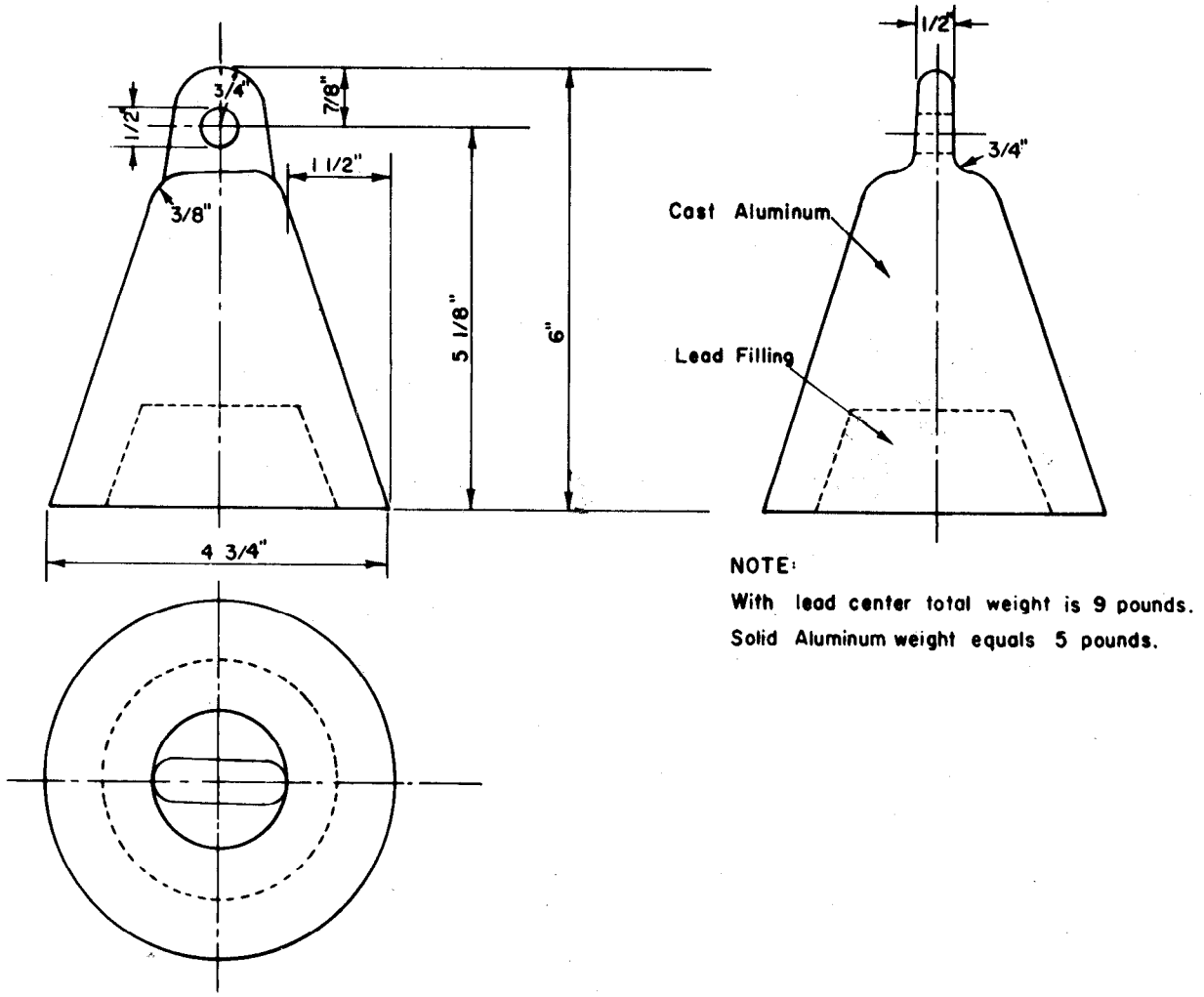

Figure 7–4.—Bell-shaped sounding weight.

sounding pole, or auger can be used for this purpose, depending on local conditions.

A sectional spud of 3-ft sections that can be joined with nickel-steel alloy dowel pins to a length of 18 ft is recommended. If a single continuous spud is fabricated, a 6-ft length is recommended. Longer spuds can be made, but they are difficult to handle and store. A sectional spud can be packed in a carrying case for easy transportation (fig. 7–6). Detailed drawings for the sectional spud are available on request from the Director, Engineering, SCS, P.O. Box 2890, Washington, D.C. 20013.

Spuds are made of case-hardened or tempered steel rods, 1-1/2 in. in diameter, into which encircling triangular grooves are machined at intervals of 0.1 ft. Each groove tapers outward from a maximum depth of 1/4 in. to 0 at the rim of the groove 0.1 ft above. The base of each cone is machined to a depth of 1/8 in., forming a cup to catch and hold the sediment. Four grooves are machined around the circumference of the bottom cone to catch sediment. A single groove is placed on every 10th cone to indicate measurements in feet. The sectional spud is equipped with various types of points for use under different conditions.

Concrete-coated reinforcing steel bars can also be used as spuds. The surface should be rough to facilitate retention of silt; a rusty rod works very

well. Spuds are used with a 3/8- or 1/2-in. nylon rope. This rope can be marked, attached, and otherwise treated the same as a sounding line.

A sounding pole or auger also can be used to measure sediment thickness. Sounding poles are best suited to the shallow water areas of reservoirs and the loosely compacted sediments overlying a firm, hard bottom. An auger with a 1-1/2-in. (O.D.) pipe and 5-ft extensions can be used to measure thick compacted sediments and exposed deposits.

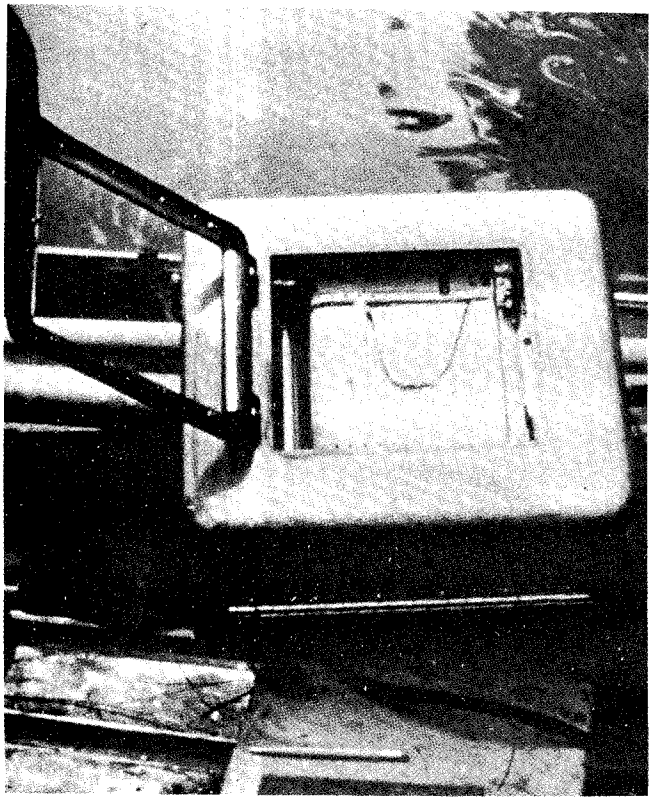

Figure 7–5.—Fathometer showing recorded depths of range cross section.

Equipment for Determining Specific Weight of Sediment

Sampling tube.—Undisturbed samples of exposed deposits can be obtained by forcing a thin-walled cylinder, such as a Shelby tube, into the sediment. Samples of submerged sediment can also be taken with a Shelby tube or similar sampler if surveys are made through ice to support the equipment. For information on such samplers see Chapter 2, Section 8, Engineering Geology, of the SCS National Engineering Handbook.

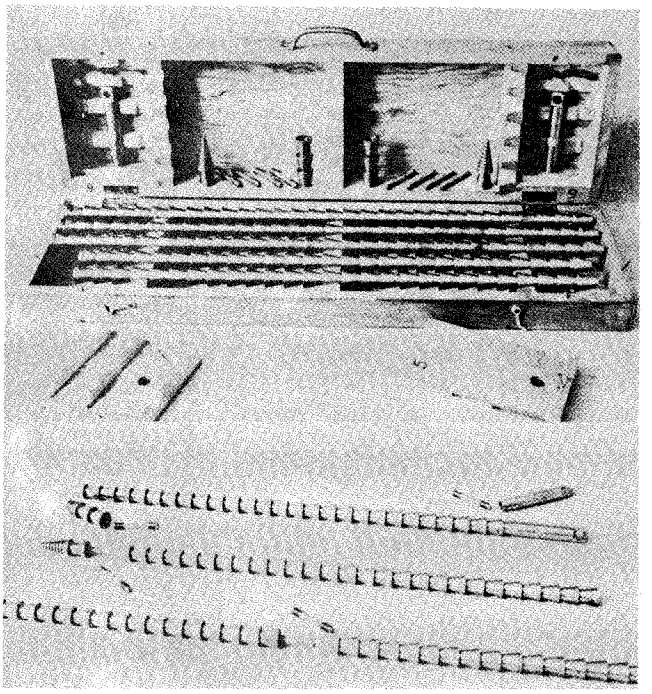

Figure 7–6.—Sediment-sampling spud and carrying case.

A stationary piston-type sampler is needed to obtain samples of submerged sediment. SCS is now using a piston-type sampling tube patterned after one developed by the Division of Water, Ohio Department of Natural Resources, Columbus, Ohio (Gottschalk 1952).

This sampler consists of a brass tube, 1-1/2-in. inside diameter (I.D.), attached to a 3/4-in. standard iron pipe. A standard double-acting water-pump piston attached to a 7/16-in. "sucker" rod is placed in the tube. The sampler is forced into the sediment by a driving weight made of larger diameter pipe that slides on the section of the 3/4-in. pipe. The length of the brass tubes can vary, but a 2- or 3-ft length serves well. Larger diameter tubes can be used.

This sampler is not available as standard equipment from manufacturers, but it can be fabricated in a machine shop. Figure 7–7 shows the dimensions and other information required for fabrication.

A modified piston-type sediment sampler has been developed by SCS in Texas. The I.D. of the brass barrel has been enlarged to contain a plexiglass tube of varying length with 1-3/8-in. I.D. The piston rod has a hole through the center and a needle valve at the top. These modifications permit better recovery of sediment difficult to sample and

disturb the sample less. Specifications are available from the Director, Engineering, SCS, P.O. Box 2890, Washington, D.C. 20013.

Stationary piston samplers of larger diameter for use with standard Shelby tubes of 1-7/8-in. and larger I.D. are available from drilling supply companies.

The specific weight of a sediment sample can be determined in the field with equipment such as a carbide moisture meter or an oven and scales.

Density probe.—One probe uses radium-226 as the source of gamma rays. The radioactive source and the detector are separated by a plug and a spacer at each end of the plug. The detector consists of a cluster of three Geiger-Müller tubes. The count is recorded in a nuclear scaler connected by electical cable to the detector in the probe (fig. 7-8).

A sediment density probe formerly owned by SCS has been transferred to the U. S. Army Corps of Engineers. It is available on loan, with an operator, on a reimbursable basis. To borrow, write to the U. S. Army Corps of Engineers, Missouri River Division, Omaha, NE 68101.

The Agricultural Research Service (ARS) has sediment density probes that are sometimes available for loan. ARS has issued several reports on radioactive sediment-density probes (Heinemann 1963).

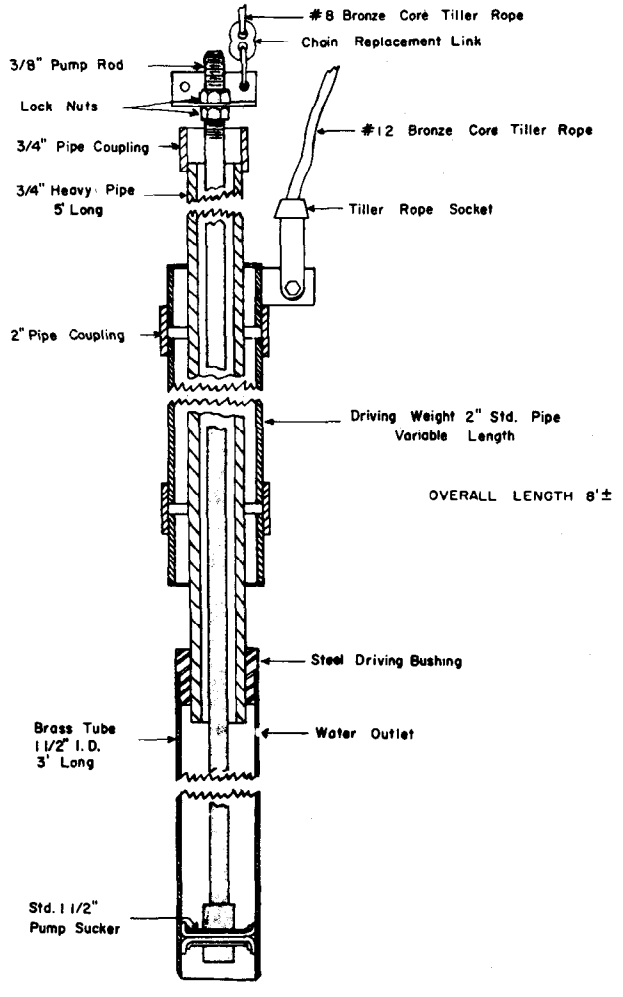

Figure 7-7.—Piston-type sediment-sampling tube.

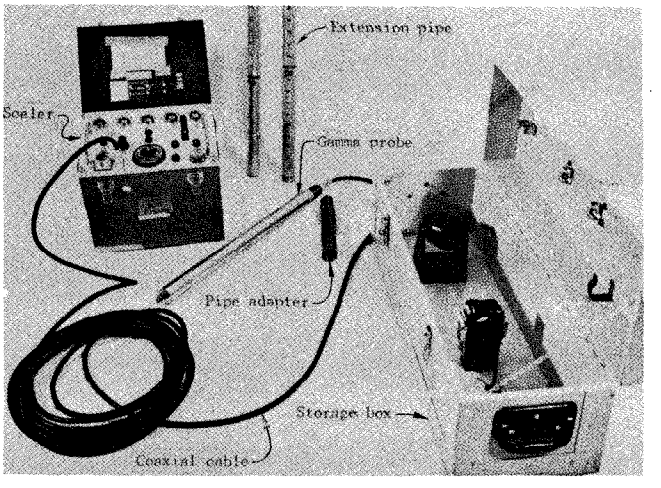

Figure 7-8.—Sediment density probe.

Survey Methods

The two currently used methods of determining the sediment volume and capacity of a reservoir are the contour and range methods. Choice of a method depends on the availability and character of base maps, purpose of the survey, and degree of accuracy desired.

The principal advantage of the contour method is that it shows both vertical and horizontal distribution of sediment and permits capacity curves to be plotted. On the other hand, it may require more observations than the range method and generally requires a longer period of survey. For small reservoirs, the contour interval should not exceed 2 ft. Random spudding, with the locations indicated on a base map or photograph, can provide enough

depth measurements to produce a contour map for very small stock ponds.

Original contour maps of existing reservoirs often fail to include enough topographic detail to ensure accurate determination of capacity. Measurements of sediment volume made by subtracting the capacity determined by new contour surveys from that determined in previous surveys include errors caused by differences in survey accuracy.

The range method often requires less survey time than does the contour method and permits frequent, precisely located, and often more representative measurements of sediment thickness. By using permanent range-end monuments, the same points can be remeasured during future surveys to determine the sediment accumulation rate more accurately. The range method is preferable on delta areas if the original cross sections can be established by borings or from known elevations in the old valley.

The two methods can be combined if the ranges are located close enough together to construct an adequate contour map. By sounding water depth and probing or spudding sediment depth, accurate original contour maps and present contour maps can be constructed. The modified prismoidal formula (eq. 7–9) can be used to compute capacity. This formula provides area-capacity as well as stage-capacity information that cannot be acquired by using the range method.

In northern states, field data for the submerged portion of reservoirs can be collected by boat during warm seasons and through ice in winter in areas where ice becomes thick enough to support personnel and equipment. Some periods of mild weather usually occur in late winter when the ice is still thick enough. If surveys through ice are planned, keep the equipment ready for use so that the survey can be made without delay if the weather becomes mild.

Prepare a shoreline map if an adequate one is not available. In some places, making minor adjustments in the shoreline contour of an existing map is all that is needed. In other places, it will be necessary to map the shoreline. Aerial photographs are most convenient and are usually adequate for use in establishing the shore map. These maps are used primarily to locate survey stations for future reference and to determine the surface area for computing water and sediment volumes. Use only the center areas of aerial photographs, since inaccuracies caused by parallax occur near the edges. Enlarge the photographs to a convenient scale, such as 1 in. = 500 ft for large reservoirs and 1 in. = 200 to 400 ft for small reservoirs. If the water level was at spillway elevation the day the photograph was taken, the shoreline can be determined from the photograph. Otherwise, the shoreline contour can sometimes be determined by using a Kelsh plotter. Gage readings are available for some reservoirs and can be used to establish the water surface elevation on the day the photograph was taken. To ensure accuracy, check the scale of each photograph in the field by chaining the distance between objects identified on the photographs.

Range Survey

SCS uses the range survey method more often than the contour survey method because much SCS work is on small and old reservoirs for which good original maps are not available. A range survey can be made in less field time than a contour survey. The range method consists of laying out representative ranges (fig. 7–9) and determining the present water and sediment depths at intervals along these ranges. More frequent soundings at the channel section will define its often irregular profile more sharply. The number and location of the ranges depend on the shape and size of the reservoir. Use a minimum of three ranges for even the smallest reservoir. Subdivide the main body of the reservoir and its principal tributary arms into ranges so that sedimentation condition in each segment is represented, insofar as possible, by the average of conditions on the bordering ranges. Generally, locate the first range for earth fill dams at the upstream toe of the dam. Begin the series of ranges on the main body of the reservoir with this range and continue upstream to the head of the reservoir, keeping the ranges approximately parallel. For convenience, a divergence of 10 degrees or less between ranges can be tolerated in locating them, but more than 30 degrees should not be permitted except for a situation described in the next paragraph.

In some places the bends or curves in the reservoir will not permit such a limit of divergence for the entire series. If so, divide the series into sets at points where the limit of divergence can be maintained within each set. In segments between the sets, the ranges may diverge no more than 90

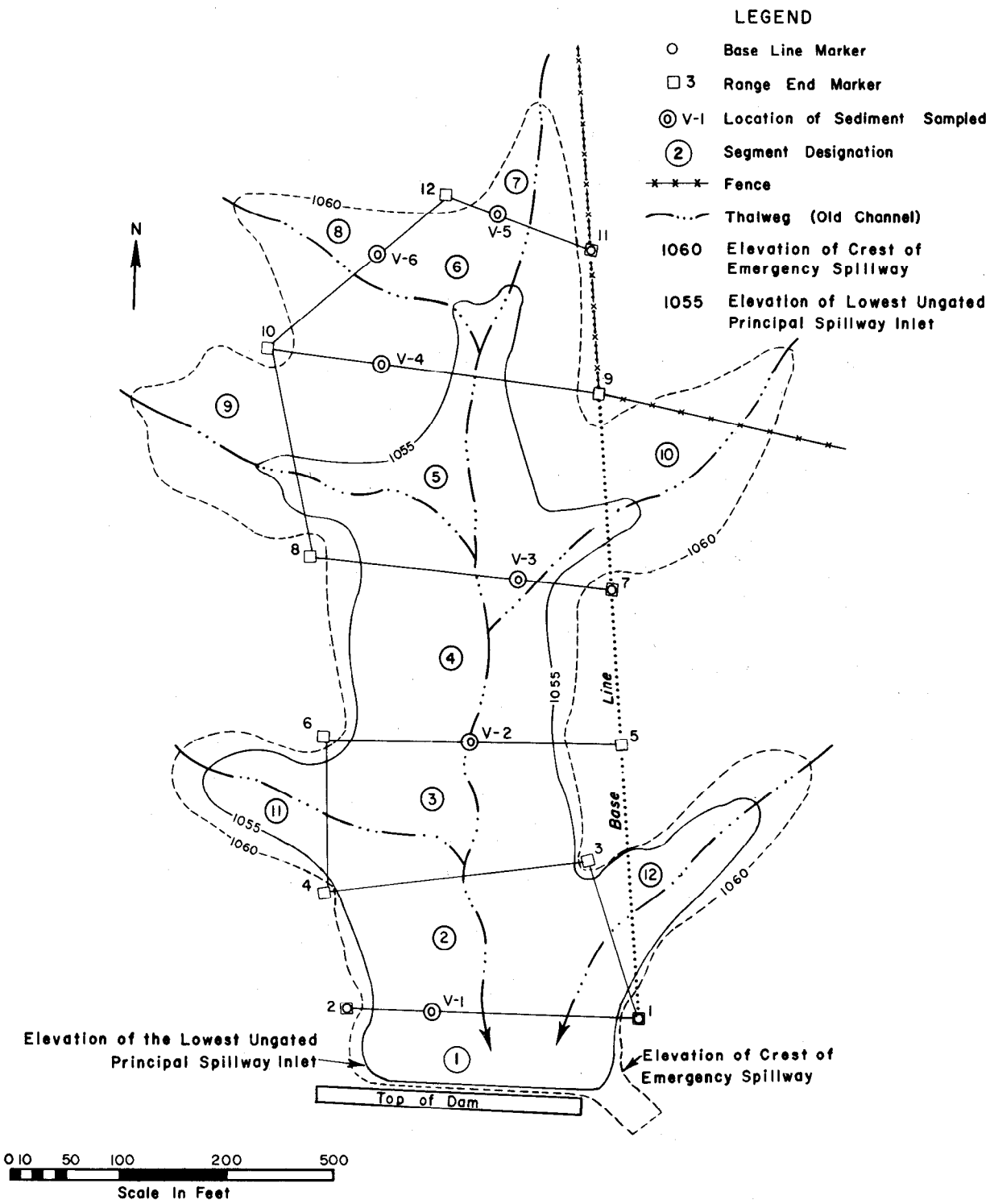

Figure 7-9.—Example of range layout.

degrees. In these transition segments, it is best to set the end ranges very close together or to start them from a common point to concentrate the irregularity into the smallest area so that it has the least effect.

For each major tributary or arm of the reservoir, start a new series of ranges without regard to the direction of the ranges on the main body of the reservoir. Lay out the first range across the mouth of the tributary or arm as nearly perpendicular to the general direction of the arm as practical.

If resurveys are expected, mark the end of each range with a permanent marker, such as a reinforced concrete post similar to those used to mark a highway right-of-way, or a steel or iron pipe set in concrete. A 4-in.^{2} reinforced concrete marker about 4 ft long is generally satisfactory. Set the markers into the ground deep enough that they will not be affected by frost action. The top of the markers should extend only far enough above the ground for ease in locating them again. Get permission from the landowners before setting the markers. Where possible, place markers along a fence line or other similar location to avoid any interference with field operations. Always set range markers above the shoreline for convenience in locating them again.

Reference the markers to a base line by instrument surveys so that they can be reestablished for future sedimentation surveys. Whenever it is known before a new dam is closed that sedimentation studies will be made later, it is desirable to locate the range ends and make instrument surveys of the ranges before the reservoir is flooded. In mountainous areas where large-size material is a significant part of the sediment delivered to a sediment pool, an original survey of the pool area is particularly important. If the particles are larger than sand, determining the original bottom of the reservoir by probing or sounding is impossible or, at least, extremely difficult. Inspecting the reservoir basin before flooding is very useful in determining range locations and observing and measuring breaks in slopes. If there are borrow areas within the basin, delineate them accurately. Smooth the borrow areas and other irregular areas in the reservoir before the construction equipment leaves the site.

The following system is recommended for identifying ranges, range markers, and reservoir segments. Identify ranges by number, beginning at the downstream range and continuing upstream to the upper end of the main body of the reservoir. Continue the numbering in consecutive order up each tributary, starting with the tributary farthest from the dam and proceeding to tributaries downstream.

Identify the range-end markers by number, beginning with the range nearest the dam and proceeding consecutively upstream in the same numbering order as for the ranges. For the first range, for example, the markers are "1" and "2". Show the assigned identification number on each marker. A brass plate imbedded in the top of the concrete marker during casting is a good place to stamp the identification. Other methods can be used, but each marker should be permanently identified.

Identify the reservoir segments by number, beginning at the segment adjoining the dam and continuing upstream.

When using the range method, measure the water depth and sediment thickness along each range. Secure the reel with cable or the end of the cable at one end of the range and assemble all necessary equipment in the boat. Fasten one end of the cable to a tree on the range line or to some other anchor, such as an auger or steel post. Take the free end across the reservoir to the other end of the range. During the crossing, attach floats to the cable to keep it on the surface of the water. If the reel has been transported, remove it from the boat and anchor it on the range line. Then tighten the cable. Keep the line meter with the cable running through it attached to the boat. Determine the range profile from the range end to the water surface by using a hand level or survey instrument and rod. Measure the distance from the range end to the line meter and set the meter to show that distance. Move the boat along the cable to the other end of the range. The line meter will show the distance from the range end at any point along the cable. Measure and record the water depth at each point where the sediment is measured directly, and record the distance between each observation point and the range end. Space spud or sounding pole observations as uniformly as possible to facilitate manual computation of range areas. If computation is to be done by computer, uniform spacing is not necessary. Space observations at intervals of 25 ft or less, depending on range length and irregularity of the reservoir bottom. Make at least 10 measurements on ranges more than 50 ft

long. For example, for a range 150 ft long, 10 measurements at 15-ft intervals, plus any additional measurements necessary because of irregularities of the reservoir bottom, are adequate. Spacing can exceed 25 ft on ranges 250 ft or more long. The measurements should be made as previously described. Check frequently with the spud those measurements made with a sounding pole. Record the information for each measurement in a field book as explained under "notekeeping."

On reaching the opposite shoreline, obtain the profile to the range end by the same method used when starting the range profile. After all the readings have been recorded, release the tension on the cable and rewind the cable on the reel. Be careful when releasing cable tension. Follow the same procedure for all ranges. For convenience in comparing the profiles, it is desirable to start all measurements from the same side of the reservoir. Label each range according to the direction in which it is run, such as 2 to 1 or 14 to 15.

The principal difference in the procedure for making surveys through ice is that the distance from the range end to the soundings is measured at the surface of the ice with tape, chain, or stadia instead of with the cable and meter used in a boat survey. Between range markers measure and sight-in the distance from the range marker to the points at which soundings are to be taken. then cut holes through the ice large enough to accommodate the sounding pole, spud, sediment sampler, or other equipment.

Contour Survey

This method is usually used by SCS for surveys of reservoirs in which the original contour maps are highly accurate, the sediment cannot be penetrated by ordinary methods, or the sediment is thick enough to eliminate the possibility of large errors caused by any inaccuracy in the original maps (Gottschalk 1952). This method requires establishing elevations on the present sediment surface and drawing the contours. The area enclosed by each contour is planimetered and the volume computed according to the contour interval. To prepare a contour map of the sediment surface, take enough accurately located soundings to provide a basis for interpolating contours. The greater the irregularity of the surface, the greater the number of soundings required. Various methods can be used to determine the location of the soundings.

Any of several sounding patterns such as radial, grid, or closely spaced ranges, can be used. If later surveys are planned, prepare an accurate after-construction contour map.

Contour-Range Survey

This method requires both a contour map and cross sections (ranges) of the original reservoir to establish the original reservoir volume and cross-sectional areas. Sedimentation surveys are made by resurveying these ranges and relating the changes in segment volume to the proportional change in the cross-sectional area of the ranges. The segments are bounded by ranges, as in the range method, but the ranges need not be parallel and segments need not be uniform between the bounding ranges. Only water depth is measured on resurveys.

Measuring Thickness of Sediment

To measure sediment thickness with a spud, hold the spud vertically and throw it into the water with enough force to penetrate to the original bottom materials of the reservoir. If the spud cannot be withdrawn from the bottom material without considerable effort, snub the spud line to the boat and rock the boat until the spud is worked loose. Raise the spud through the water slowly to prevent washing off the sediment. Determine the sediment thickness by inspecting the deposit and the original bottom material trapped in the cups of the spud or adhering to the outside of the spud. Clean the spud thoroughly after each use. An ordinary scrub brush is adequate for this purpose.

If loose fine sediment does not adhere to the spud, use a steel reinforcing bar coated with concrete or other material with a rough surface. A medium to coarse sand mix is best. A mixture of quick-setting waterproof epoxy cement and sand or dark grits such as silicon carbide gives a durable surface to which sediment will readily adhere.

During such measurements both the present and the original depth of water can be determined. Determine the present depth of water by subtracting the sediment thickness plus the depth of penetration into the original bottom material from the water surface reading on the line. The original water depth equals the water surface reading on the line minus the depth of pentration into the

original bottom material. Another method of determining the original depth is to determine the present water depth and add the sediment thickness as measured on the spud or reinforcing bar. Make the necessary adjustments for any difference between the water surface elevation at the time the measurements are made and the elevation of the principle spillway.

When resurveying reservoirs, a combination of spudding and sounding is most accurate, especially if the sediment deposited since the previous survey is less than 1 ft deep and the bottom of the reservoir is irregular.

Under some conditions, a sounding pole can be used to measure sediment thickness if the upper surface of the sediment is perceptible. If conditions are favorable, considerable time can be saved by using a sounding pole instead of a spud. Successful use of a sounding pole requires the ability to distinguish the sediment from the original bottom materials according to the difference in compaction. The surface of the sediment can usually be identified as the pole is lowered into the water. Determine the present water depth by taking a reading when the pole touches the surface of the sediment. Then push the pole down through the sediment to the more resistant original bottom material to measure the original water depth. The difference between the present and the original water depth is the sediment thickness. A sounding pole is most useful for measuring deposits of silt and clay because these deposits are usually less compact than the underlying bottom materials. Use of a sounding pole is normally limited to a sediment thickness of 10 ft or less, depending on the diameter of the pole and the character of the sediment.

In most reservoirs, sediment in shallow water has been exposed at one time or another to aeration, which can cause a hard crust to form. The crust can be mistaken for the old soil surface if only a sounding pole is used for measurements. It is therefore necessary to check sounding pole measurements regularly with a spud. This can be done if the deposits are not too thick. An auger can be used for greater depths of compacted sediment; additional 5-ft lengths of pipe can be added as needed. An auger is also suitable for determining the thickness of exposed deposits such as delta deposits.

Sampling for Volume-Weight of Sediment

Determine the volume-weight of sediment by taking a sample of known volume, drying it, and determining its dry weight. Report the results in standard units. Samples of exposed deposits can be taken with thin-wall push tubes, but samples of submerged deposits usually require a piston-type sampler. Take samples of exposed materials by forcing a push tube into the deposits to the desired depth; then remove the tube by excavating around it. The tubes can be capped and sent to the laboratory, or the samples can be extruded into other containers and sent to the laboratory.

Use a different procedure with the piston-type sampler. With the piston flush with the end of the sampling tube, lower the sampler from the boat to the sediment surface with ropes attached to the driving weight and to the piston rod of the sampler. Holding the rope attached to the piston rod in a fixed vertical position, usually snubbed over the side of the boat, drive the sampling tube into the sediment by raising and dropping the driving weight until the desired penetration is reached. Keep track of the depth of penetration. Mark the rope attached to the driving weight (see fig. 7–3) to prevent overdriving and consolidating the sediment sample. This provides a check on the length of the sediment sample obtained. Raise the sampler by pulling up on both ropes simultaneously. If the entire amount of extruded material is not required for analysis, select representative segments of the core. Measure these segments so that, together with the core diameter measurement, the volume of the sample can be computed. Each sample should contain at least a 0.3-ft length of core. Place the samples in pint jars or other containers and label them as to reservoir, location in reservoir, and diameter, length, and depth interval of the sample.

Send the samples to a laboratory to be dried and weighed and for additional analyses, such as grain-size analysis. The samples can be analyzed locally, sent to the materials testing section, or sent to the Soil Mechanics Laboratory at Lincoln, Nebr. The volume-weight of the sediment is needed to compute the weight of sediment accumulated in the reservoir. Mechanical analyses give the grain size for determining size distribution, calculating trap efficiency, and determining storage requirements in planning and designing floodwater-retarding structures.

During the field survey take enough sediment samples to determine representative specific weights for various segments of the reservoir. The number of samples required is determined by the size of the reservoir, character of material entering it, location and number of tributary streams, and extent of aeration. Indicate the location of each sample on the reservoir map (see fig. 7–9).

Direct Measurement of Volume-Weight

An instrument has been developed for determining the volume-weight of submerged sediment in place (Heinemann 1963). It is based on detecting the backscattering of gamma rays from a radioactive source. The instrument's response varies proportionally with the density of the material tested.

Some volumetric sampling is necessary to get specific gravity information for calibrating the gamma probe. Sediment samples must be taken if information on grain-size distribution is needed.

Notekeeping

Notekeeping for reservoir sedimentation surveys includes recording data on location, depth of soundings, and sediment thickness; descriptions of materials spudded and sampled; and all related information helpful in computing sediment volume and in preparing a report. Accurate and legible field notes are important for proper evaluation of the data.

It is equally important that notes be orderly and complete so that they can be evaluated in the field as well as in the office and followed years later, when a reservoir is resurveyed.

The bound Engineer Field Book, SCS–ENG–191, is recommended for keeping notes. The book can be carried conveniently in a pocket. The left-hand pages are divided into columns about 3/4 in. wide, adequate for recording numerical data. The right-hand pages are suitable for descriptions or sketches.

On the first page of the notes list the name of the reservoir, the nearest town, the date, the names of all personnel in the work party, and the water and crest elevation. Include on the first page any additional information available. For example, a plaque on the gatehouse or dam on a large reservoir may give information on the length of the spillway, the original capacity, the length of the lake, the spillway crest elevation, and the length of the dam at the top.

Record the weather conditions each day. General information on notekeeping is presented in Part 540 of the SCS National Engineering Manual and in Technical Release No. 62. If more than one boat is used in making measurements during a reservoir sedimentation survey, keep a set of notes in each boat. For example, if one boat is used to measure water depth and distance from shore and to tag the range cable for spudding and sediment sampling, keep complete notes of these measurements, including identifying data on fathometer charts. If the spudding and sediment sampling is done from a second boat, keep pertinent records on that boat.

In addition to the notebooks, keep a map of the reservoir showing its configuration and the range layout. If a previous survey has been made and a report published, a small-scale map showing the ranges and much helpful data on the reservoir and the watershed should be available. Aerial photographs of the reservoir will help in completing the survey and are available for most areas in the conterminous United States. Reservoir surface area is sometimes determined from aerial photographs.

Recording Measurements

It is traditional in range layouts to place odd-numbered range ends on the left side of the reservoir facing downstream. At the top of the page, identify the range. Start at the first range upstream from the dam with markers numbered 1 and 2. Then at the top of the page indicate R 1→2 or R 2→1, depending on the direction and order in which measurements are made. Range numbers must be shown in the proper sequence for later orientation to locate the thalweg and make comparisons. After the range cable has been run through the line meter and stretched across the range, record the horizontal distance from the marker to the shoreline. Then measure the distance from the shoreline to the line meter and set the meter to show the total distance from the marker.

If the shoreline at the time of the survey is not the same as the crest shoreline, determine the distance of these points from the range-end marker, since this information will be helpful later when reconstructing the cross section of the range. All

measurements must be in terms of marker-to-marker distance. For example, if the distance from the marker to the crest shoreline is 10 ft, that to the present shore 2 ft farther, and that to the line meter another 7 ft, set the line meter at 19. The range can be run from marker 1 to marker 2 or vice versa as long as the notes give the correct sequence to orient the cross section.

Keep the records in tabulated form (see fig. 7–10). Head the first column "Station," and note the number of feet from the marker indicated; head the second column "Water Depth." Head the third column "Total Depth" and record the depth from the present water surface to the old soil surface, which is the sum of the water depth and sediment depth. Head the fourth column "Sediment Depth." In figure 7–10, the water level is at crest elevation. If the water level is not at crest elevation, make a correction in the fifth column, headed "Elevation of Original Bottom," to adjust the total depth to the original bottom elevation. Record the water-level elevation in the notes each day that sounding and spudding are done. If the water level fluctuates during the day, as on a power reservoir, record the time of the range survey and record the correct water level at that time; for example, Time—4:30 p.m., Water level—426.52 ft.

Record all depth measurements to the nearest 0.1 ft. If ranges or parts of ranges cross above-crest deposits, record the water depth as a minus figure. For example, if the sediment at the point of measurement is 1.2 ft above crest level or the present water level, record the present water depth as –1.2 ft.

Describe any sediment retrieved in the space to the right of column 5 under the heading "Remarks." Record the pertinent characteristics of the sediment, including type of materials, color, consistency, stratification, cohesiveness, thickness of homogeneous layers, and recognizable material

June 8, 1967 — Sunny, hot

Mud Creek Reservoir
R2→1

Station	Water Depth	Total Depth	Sediment Depth	Elevation of Original Bottom	Remarks
0+00	–	–	–	1059.1	ground at range marker 2
+17	0.0	0.0	0.0	1055.0	elev. of lowest ungated principal spillway inlet
+37	1.0	1.0	0.0	1054.0	no sediment, old soil is yellowish-orange, clayey sand
+57	3.5	3.7	0.2	1051.3	dense, lt. gray, cohesive, silty clay, w/ leaf fragments, and sandy underlying old soil
+77	4.5	5.0	0.5	1050.0	" " " " " "
+97	5.8	6.4	0.6	1048.6	same sediment, over rock bottom
1+17	5.6	6.3	0.7	1048.7	(cable tagged at 1+00 for sediment sample) same sediment over rock bottom
+37	5.8	6.2	0.4	1048.8	" " " " "
+57	5.7	6.2	0.5	1048.8	" " " " "
+67	7.8	9.0	1.2	1046.0	" " " " "
+77	7.9	9.4	1.5	1045.6	same sediment, not sure of old bottom
+87	6.0	6.6	0.6	1048.4	" " , sandy clay bottom
2+07	5.0	5.3	0.3	1049.7	" " " " "
+27	3.3	3.5	0.2	1051.5	" " " " "
+47	1.0	1.0	0.0	1054.0	" " " " "
+50	0.0	0.0	0.0	1055.0	elev. of principal spillway inlet
2+64	0.0	0.0	0.0	1060.2	ground at range-end marker 1
	W = 233′				

8:20 a.m. water surface elev. - 1055.0′

LCG

Figure 7–10.—Notes from the measurement of a range.

such as mica, roots, and leaves. It is most important to note the geologist's interpretation of the boundary between the sediment and the surface of the original bottom, especially for spudding, since this is the basis for calculating sediment accumulation in the reservoir.

If the contour method is used, record notes on the base line layout and triangulation according to procedures given in standard surveying textbooks. If a plane table is used, record the information directly on the plane table sheet. Record sounding information and sediment descriptions as in range surveys.

No information is to be added to notes or plane table sheets obtained from the National Archives.

Sediment Samples

Samples must be identified. Record the following items about the samples in the notes: reservoir name, sample number, location of the sample in the reservoir in terms of distance from a station, date taken, total length of sample recovered, length of sample placed in the jar (to the nearest 0.1 in), and diameter of the sample. Record the reservoir name and sample number on the lid or elsewhere on the jar. Accurate measurements are required for meaningful volume-weight determinations. If a sample was obtained not on a range, note its location. Itemize the information about samples on a separate page of the notebook as in figure 7–11.

Fathometers

If a recording fathometer is used, record in the field book the measurements made at both ends of the range in shallow water with a sounding weight or pole. Because of inherent limitations in echo-sounding equipment, do not make measurements with this equipment in water less than 3 ft deep. To calibrate the fathometer at a depth exceeding 3 ft, check the echo-sounding measurement against the sounding-weight or -pole measurement.

Write the name of the reservoir, date, range, crest elevation, current water-surface elevation, and name or initials of the operator directly on the fathogram. Marking the fathogram with a vertical line every 10 ft and a heavy mark at 50 ft and every multiple of 50 ft is essential for horizontal control. Write the distance in feet directly on the fathogram along the vertical mark at least every 100 ft. Record the stationing for the beginning and end of the fathogram record on the fathogram. For the portion of the range not recorded insert in the field book: "See fathogram." To help in interpreting the fathogram, move the boat at a constant speed.

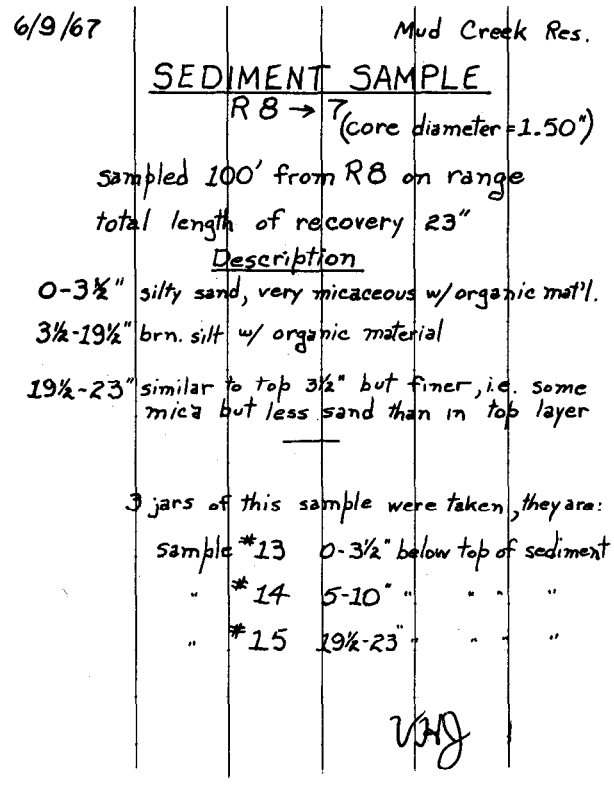
6/9/67 Mud Creek Res.

SEDIMENT SAMPLE

R8 → 7 (core diameter = 1.50")

sampled 100' from R8 on range

total length of recovery 23"

Description

0-3½" silty sand, very micaceous w/organic mat'l.

3½-19½" brn. silt w/ organic material

19½-23" similar to top 3½" but finer, i.e. some mica but less sand than in top layer

3 jars of this sample were taken, they are:

sample #13 0-3½" below top of sediment

" #14 5-10" " " " "

" #15 19½-23" " " " "

VHJ

Figure 7–11.—Notes for sediment sample.

Computing Water Capacity and Sediment Volume

Because a reservoir is a complex three-dimensional figure, the accuracy of volume determinations reflects the amount of field and computation time invested.

The range method requires a minimum of field and computation time, but using the prisomoidal equation (eq. 7–3) in volume computations restricts the selection of ranges and segments. The ranges must be nearly parallel, and the segments should be uniform between main bounding ranges. If these requirements are not met, the prisomoidal equation does not furnish reliable answers.

The contour method requires a contour map of the original reservoir and a contour map for each

resurvey. No restrictions are placed on field procedures, and data points can be random or ordered on ranges. It is, however, necessary to obtain enough data points for each sedimentation survey to construct an adequate contour map. Because of the field time required to obtain data for an adequate contour map and the office time required to construct the map and planimeter the areas, SCS seldom uses the contour method.

Range Method

After collecting the field data, determine the original area of the cross sections of the ranges and the area of the cross sections of sediment at each range to use in computing the original reservoir capacity and present volume of sediment. These areas can be computed directly from the field notes, or they can be determined by plotting the cross sections and planimetering the areas. The "computation" method is more accurate and saves considerable time by eliminating the time required to plot and planimeter the cross sections.

An example of the method used to compute the original area of cross sections for both capacity and sediment is shown in figure 7–12. The following equation can be used if the spacing of soundings or observations is not uniform. It permits summing the areas of individual trapezoidal slices, which are increments of the total area of the cross sections.

$$A = \frac{D}{2}(d_1 + d_2) \qquad \textbf{(7–1)}$$

Where

- A = area of trapezoid, square feet.
- D = distance between soundings, feet.
- d_1 = depth below reservoir crest at first observation, feet.
- d_2 = depth below reservoir crest at second observation, feet.

Summing the area of the trapezoids in the range cross section gives the total end area of the cross section, E, for the original capacity if the original water depth is used in making the computations, and the total end area of the cross section, E, for sediment if the sediment depth is used in the equation.

If the observations (soundings) are spaced fairly uniformly along the range, the following equation can be used in computing the area of the cross sections.

$$E = D_1\left(\frac{d_1}{2} + d_2 = d_3 \ldots \frac{d_n}{2}\right) + D_2\left(\frac{d_1}{2} + d_2 + d_3 + \ldots \frac{d_n}{2}\right) \text{ etc.} \qquad \textbf{(7–2)}$$

Where

- E = total area of the cross section of original capacity or sediment, square feet.
- D_1, D_2, etc. = distance between observations, feet. D_1 is the spacing used for one uniformly spaced group or series of observations; D_2, the spacing for another group or series of uniformly spaced observations; etc.
- $d_1, d_2, \ldots d_n$ = original depth of water or sediment thickness below crest at each observation, feet.

Reservoir: Mud Creek Range 2 → 1

Distance from Station	D (ft)	D/2 (ft)	d_1 (ft)	d_2 (ft)	d_1+d_2 (ft)	Area (sq. ft)	Accumulative Area (sq. ft)	
			Original Area					
0+17	0	0.0	0.0	0.0	0.0	0.0	0.0	
+37	20	10	0.0	1.0	1.0	10.0	10.0	
+57	20	10	1.0	3.7	4.7	47.0	57.0	
+77	20	10	3.7	5.0	8.7	87.0	144.0	
+97	20	10	5.0	6.4	11.4	114.0	258.0	
1+17	20	10	6.4	6.3	12.7	127.0	385.0	
1+37	20	10	6.3	6.2	12.5	125.0	510.0	
+57	20	10	6.2	6.2	12.4	124.0	634.0	
+67	10	5	6.2	9.0	15.2	76.0	710.0	
+77	10	5	9.0	9.4	18.4	92.0	802.0	
+87	10	5	9.4	6.6	16.0	80.0	882.0	
2+07	20	10	6.6	5.3	11.9	119.0	1001.0	
+27	20	10	5.3	3.5	8.8	88.0	1089.0	
+47	20	10	3.5	1.0	4.5	45.0	1134.0	
+50	3	1.5	1.0	0.0	1.0	1.5	1135.5	Original E
	W=233'							
			Sediment					
0+17	0	0	0.0	0.0	0.0	0.0	0.0	
+37	20	10	0.0	0.0	0.0	0.0	0.0	
+57	20	10	0.0	0.2	0.2	2.0	2.0	
+77	20	10	0.2	0.5	0.7	7.0	9.0	
+97	20	10	0.5	0.6	1.1	11.0	20.0	
1+17	20	10	0.6	0.7	1.3	13.0	33.0	
+37	20	10	0.7	0.5	1.2	12.0	45.0	
+57	20	10	0.5	0.5	1.0	10.0	55.0	
+67	10	5	0.5	1.2	1.7	8.5	63.5	
+77	10	5	1.2	1.5	2.7	13.5	77.0	
+87	10	5	1.5	0.6	2.1	10.5	87.5	
2+07	20	10	0.6	0.3	0.9	9.0	96.5	
+27	20	10	0.3	0.2	0.5	5.0	101.5	
+47	20	10	0.2	0.0	0.2	2.0	103.5	
2+50	3	1.5	0.0	0.0	0.0	0.0	103.5	Sediment E
	W=233'							

Figure 7–12.—Computation sheet for determining range area.

An example of the computation of the original area of the cross section from data in the field notes (fig. 7–10) and equation 7–2 follows. The d_1, d_2, ...d_n are from the third column in the notes, Total Depth:

$$E = 20\left(\frac{0}{2} + 1.0 + 3.7 + 5.0 + 6.4 + 6.3 + 6.2 + \frac{6.2}{2}\right)$$
$$+ 10\left(\frac{6.2}{2} + 9.0 + 9.4 + \frac{6.6}{2}\right)$$
$$+ 20\left(\frac{6.6}{2} + 5.3 + 3.5 + \frac{1.0}{2}\right)$$
$$+ 3\left(\frac{1.0}{2} + \frac{0}{2}\right)$$

$E = 1{,}135.5$ ft² (original capacity)

The sediment area is computed by equation 7–2 but d_1, d_2, ...d_n equal sediment thickness (fourth column of the notes) instead of original water depth:

$$E = 20\left(\frac{0}{2} + 0.2 + 0.5 + 0.6 + 0.7 + 0.5 + \frac{0.5}{2}\right)$$
$$+ 10\left(\frac{0.5}{2} + 1.2 + 1.5 + \frac{0.6}{2}\right)$$
$$+ 20\left(\frac{0.6}{2} + 0.3 + 0.2 + \frac{0.0}{2}\right)$$

$E = 103.5$ ft² (sediment)

The cross-sectional area of sediment below the crest elevation of the reservoir can also be computed from the computation sheets (fig. 7–12). Above-crest sediment deposits can be computed in the same manner. Record the area of all cross sections on Form SCS–ENG–209 "Reservoir Capacity Computation Sheet—Range Method" (figs. 7–13 and 7–14).

These examples illustrate the desirability of uniformity in spacing sounding observations from the standpoint of simplicity in hand computation.

In addition, water surface area, A, and the quadrilateral area, A′, must be determined for each segment. Both approximate the area enclosed by the ranges and intervening shoreline (crest elevation) bounding each segment of the reservoir. Reservoir segments can be bounded by any number of ranges and intervening stretches of shoreline. Segments with two ranges can have one or two stretches of shoreline, and areas with three or more ranges can be closed figures with no shoreline or can have any number of stretches up to the number of ranges. Determine the water surface area, A, by planimetering. Determine the quadrilaterial areas, which are formed by each set of main ranges and straight lines connecting the points where they intersect the shoreline at crest elevation, by computation. Computation of these areas is simple and fast. Scale the perpendicular distances, h_1 and h_2, between ranges and make the computations shown in steps 10 to 13 of figure 7–13. Step-by-step instructions for completing Form SCS–ENG–209, "Reservoir Capacity Computation Sheet—Range Method"; a filled-out example of this form; and a sketch of "h" distances are given in figures 7–13, 7–14, and 7–15, respectively.

The original capacity or sediment volume in each segment is determined by the Dobson prismoidal formula:

$$V = \frac{A'}{3}\left(\frac{E_1 + E_2}{W_1 + W_2}\right) + \frac{A}{3}\left(\frac{E_1}{W_1} + \frac{E_2}{W_2}\right) + \frac{h_3E_3 + h_4E_4 + \ldots}{130{,}680} \quad \textbf{(7–3)}$$

in which

- V = total original capacity or sediment volume, acre-feet.
- A′ = computed quadrilateral area of the segment formed on two sides by the main bounding ranges and on the other sides by lines drawn from the intersection of the range lines and crest contour, acres.
- A = segment area planimetered from base map, acres.
- E = cross-sectional area of water, sediment, or both along the range, square feet.
- W = width (length of bounding range) at crest elevation, feet.
- h = perpendicular distance from the range on a tributary to the junction of the tributary and the main stream or, if this junction is outside the segment, to the point where the thalweg of the tributary interesects the downstream range, feet (see fig. 7–15).

Subscripts used with E, W, and h indicate the respective ranges of the segment. For each segment, the range numbers (subscripts in the equation) generally are No. 1, the downstream range;

U. S. DEPARTMENT OF AGRICULTURE
SOIL CONSERVATION SERVICE

RESERVOIR CAPACITY COMPUTATION SHEET RANGE METHOD

SCS-209 (2-64)

_____ NAME OF RESERVOIR

SHEET____ OF____

$V = A'/3\,(E_1+E_2)/(W_1+W_2) + A/3\,(E_1/W_1+E_2/W_2) + h_3 E_3/130{,}680 +$ _____

$V = \quad V_1 \quad + \quad V_2 \quad + \quad V_3$ _____

NUMERICAL INSTRUCTION				VERBAL INSTRUCTIONS				
1		SEGMENT NO.	GENERAL	SEGMENT NUMBER				
2		RANGE 1		DOWNSTREAM BOUNDING RANGE				
3		RANGE 2		UPSTREAM BOUNDING RANGE				
4		W_1		WIDTH DOWNSTREAM RANGE				
5		W_2		WIDTH UPSTREAM RANGE				
6	(4)+(5)	W_1+W_2		LINE (4) PLUS LINE (5)				
7	(6)X3	$3(W_1+W_2)$		3 TIMES LINE (6)				
8		h_1		PERPENDICULAR DISTANCE DOWNSTREAM RANGE TO SHORELINE UPSTREAM RANGE				
9		h_2		PERPENDICULAR DISTANCE UPSTREAM RANGE TO SHORELINE DOWNSTREAM RANGE				
10	(4)X(8)	h_1W_1		LINE (4) TIMES LINE (8)				
11	(5)X(9)	h_2W_2		LINE (5) TIMES LINE (9)				
12	(10)+(11)	$2A'$		LINE (10) PLUS LINE (11)				
13	(12)÷87,120	A'		LINE (12) DIVIDED BY 87,120 = COMPUTED QUADRILATERAL AREA OF SEGMENT IN ACRES				
14		A		SURFACE AREA OF SEGMENT PLANIMETERED FROM BASE MAP, IN ACRES				
15	(14)÷3	$1/3A$		1/3 OF LINE (14)				
16		h_3		PERPENDICULAR DISTANCE FROM SIDE RANGE TO THALWEG OF MAIN CHANNEL				
17	(16)÷130,680	$h_3/130{,}680$		LINE (16) DIVIDED BY 130,680				
18			ORIGINAL CAPACITY					
19		E_1		ORIGINAL END AREA OF DOWNSTREAM RANGE				
20		E_2		ORIGINAL END AREA OF UPSTREAM RANGE				
21	(19)+(20)	E_1+E_2		LINE (19) PLUS LINE (20)				
22	(21)÷(7)	$1/3\,\frac{(E_1+E_2)}{(W_1+W_2)}$		LINE (21) DIVIDED BY LINE (17)				
23	(19)÷(4)	E_1/W_1		LINE (19) DIVIDED BY LINE (4) = AVG. ORIG. WATER DEPTH AT DOWNSTREAM RANGE				
24	(20)÷(5)	E_2/W_2		LINE (20) DIVIDED BY LINE (5) = AVG. ORIG. WATER DEPTH AT UPSTREAM RANGE				
25	(23)+(24)	$(E_1/W_1+E_2/W_2)$		LINE (23) PLUS LINE (24)				
26		E_3		ORIGINAL END AREA OF SIDE RANGE				
27	(13)X(22)	V_1		LINE (13) TIMES LINE (22)				
28	(15)X(25)	V_2		LINE (15) TIMES LINE (25)				
29	(17)X(26)	V_3		LINE (17) TIMES LINE (26)				
30	(27)+(28)+(29)	V		$V = V_1 + V_2 + V_3$, ETC. ORIGINAL CAPACITY OF SEGMENT				
31			SILT VOLUME					
32		E_1		SEDIMENT END AREA OF DOWNSTREAM RANGE				
33		E_2		SEDIMENT END AREA OF UPSTREAM RANGE				
34	(32)+(33)	E_1+E_2		LINE (32) PLUS LINE (33)				
35	(34)÷(7)	$1/3\,\frac{(E_1+E_2)}{(W_1+W_2)}$		LINE (34) DIVIDED BY LINE (7)				
36	(32)÷(4)	E_1/W_1		LINE (32) DIVIDED BY LINE (4) = AVG. SED. THICKNESS DOWNSTREAM RANGE				
37	(33)÷(5)	E_2/W_2		LINE (33) DIVIDED BY LINE (5) = AVG. SED. THICKNESS UPSTREAM RANGE				
38	(36)+(37)	$(E_1/W_1+E_2/W_2)$		LINE (36) PLUS LINE (37)				
39		E_3		AREA OF SEDIMENT AT SIDE RANGE				
40	(13)X(35)	V_1		LINE (13) TIMES LINE (35)				
41	(15)X(38)	V_2		LINE (15) TIMES LINE (38)				
42	(17)X(39)	V_3		LINE (17) TIMES LINE (39)				
43	(40)+(41)+(42)	V		$V = V_1 + V_2 + V_3$, ETC. SEDIMENT VOLUME OF SEGMENT				
44								

Figure 7-13.—Instructions for computing reservoir capacity—range method.

RESERVOIR CAPACITY COMPUTATION SHEET RANGE METHOD

SCS-209 (2-64)

U. S. DEPARTMENT OF AGRICULTURE
SOIL CONSERVATION SERVICE

MUD CREEK
NAME OF RESERVOIR

SHEET 1 OF 3

$V = A'/3\,(E_1+E_2)/(W_1+W_2) + A/3\,(E_1/W_1+E_2/W_2) + h_3\,E_3/130{,}680 +$ _____

$V = V_1 + V_2 + V_3$ _____

1		SEGMENT NO.	GENERAL	(1)	(2)	(3)	(4)	(11)
2		RANGE 1		Dam	2-1 (12-1)	4-3	etc.	12-1
3		RANGE 2		2-1	4-3 (4-11)	6-5		end
4		W_1			233.	206.		120
5		W_2		233	206.	240.		-
6	(4)+(5)	W_1+W_2			439.	446.		120
7	(6)X3	$3(W_1+W_2)$			1317.	1338.		360
8		h_1			250.	145.		235
9		h_2			245.	165.		-
10	(4)X(8)	h_1W_1			58250.	870.		28200
11	(5)X(9)	h_2W_2			50470.	39600.		-
12	(10)+(11)	$2A'$			108720.	69470.		28200
13	(12)÷87,120	A'			1.25	.80		0.32
14		A		1.38	1.29	.78		0.48
15	(14)÷3	$1/3A$		.46	.43	.26		0.16
16		h_3			128.	0		
17	(16)÷130,680	$h_3/130{,}680$			.00098	0		
18			ORIGINAL CAPACITY		80. .00061			
19		E_1			1135.5	800.		840
20		E_2		7608.	800.0	856.		-
21	(19)+(20)	E_1+E_2			1935.5	1656.		840
22	(21)÷(7)	$1/3\,\frac{(E_1+E_2)}{(W_1+W_2)}$			1.47	1.24		2.33
23	(19)÷(4)	E_1/W_1			4.87	3.88		7.00
24	(20)÷(5)	E_2/W_2		32.65	3.88	3.56		-
25	(23)+(24)	$(E_1/W_1+E_2/W_2)$		32.65	8.75	7.44		7.00
26		E_3 E_4			700. 600.	0		-
27	(13)X(22)	V_1			1.84	.99		0.75
28	(15)X(25)	V_2		15.02	3.76	1.93		1.12
29	(17)X(26)	V_3 V_4		V_o = 4.20	.69 .37			-
30	(27)+(28)+(29)	V		10.82	6.66	2.92		1.87
31			SILT VOLUME					
32		E_1			103.5	70.0		56
33		E_2		103.5	70.5	95.0		-
34	(32)+(33)	E_1+E_2		103.5	173.5	165.0		56
35	(34)÷(7)	$1/3\,\frac{(E_1+E_2)}{(W_1+W_2)}$			.13	.12		0.16
36	(32)÷(4)	E_1/W_1			.44	.34		0.47
37	(33)÷(5)	E_2/W_2		.44	.34	.40		-
38	(36)+(37)	$(E_1/W_1+E_2/W_2)$		.44	.78	.74		0.47
39		E_3 E_4			35. 20.			-
40	(13)X(35)	V_1			.16	.10		0.05
41	(15)X(38)	V_2		.54*	.33	.19		0.08
42	(17)X(39)	V_3 V_4		V_o = .22	.03 .01	0		-
43	(40)+(41)+(42)	V		.32	.53	.29		0.13
44				*Calculated by special formula				

Figure 7–14.—Computing reservoir capacity—range method.

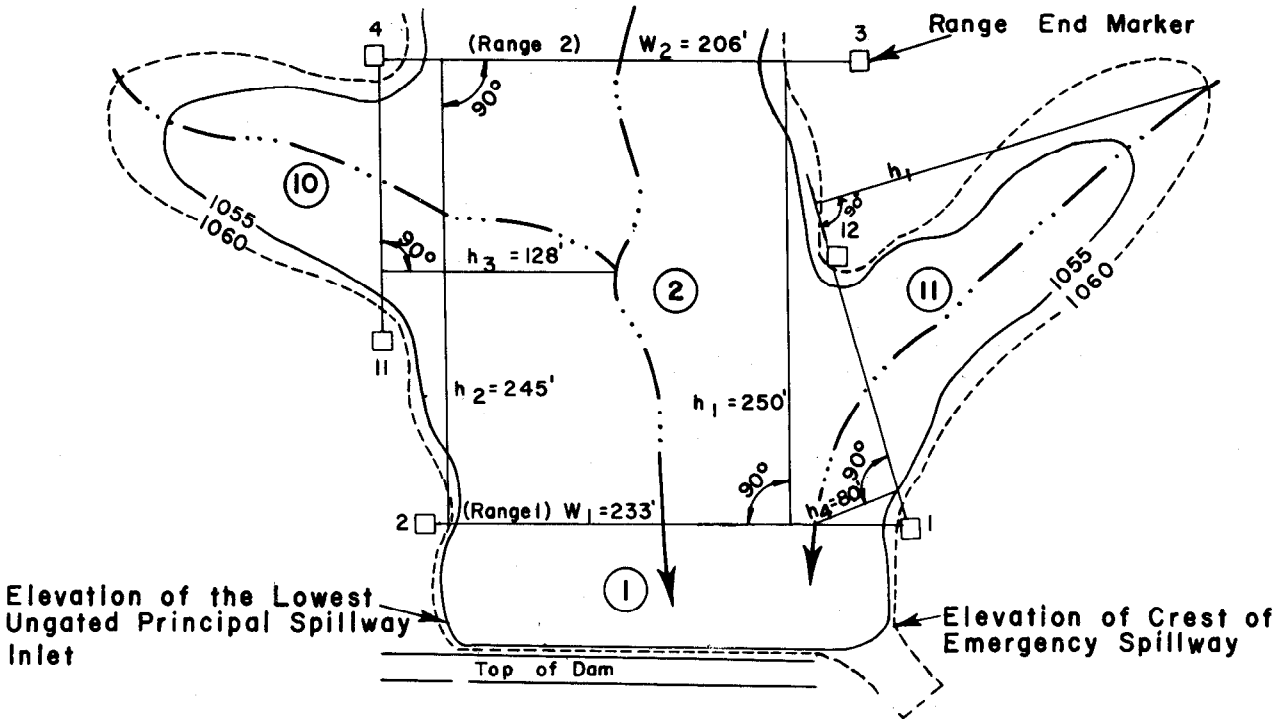

h_1 = The perpendicular distance, in feet, from the downstream range to the shoreline at the upstream range on the right side looking upstream.

h_2 = The perpendicular distance, in feet, from the upstream range to the shoreline at the downstream range on the right side looking downstream.

h_3 = The perpendicular distance from the range on a tributary to the junction of the tributary with the main stream.

h_4 = The perpendicular distance from the range on a tributary to the point where the thalweg of the tributary intersects the downstream range.

Figure 7–15.—Methods of determining "h" values.

No. 2, the upstream range; and No. 3 and higher, ranges on tributaries or arms of the reservoir. If the range on a tributary is more nearly parallel to the downstream range than is the upstream range, the tributary range can be taken as No. 2 and the upstream range as No. 3.

This general equation applies to all reservoir segments except the segment next to the dam in which the effect of the shape of the dam does not lend itself to inclusion in the formula. Since this formula applies mostly to segments with an irregular shoreline and applies only to ranges that are nearly parallel, the average end-area equation 7–4 gives more reliable results for curved segments with a regular shoreline:

$$V = \frac{A}{2}\left(\frac{E_1}{W_1} - \frac{E_2}{W_2}\right) \qquad (7\text{–}4)$$

Apply the equations for sediment volume the same way as for original capacity and give each variable, except E, the same value. If there is only one range in a segment, as on a tributary or reservoir arm, consider the upstream range as a point

at the extreme upper end of the arm. In this case the upstream range has zero cross-sectional area ($E_2 = 0$) and zero width ($W_2 = 0$), although the quadrilateral area (A') is not zero. Here A' has one side (W_2) measuring zero and has the shape of a triangle in which W_1 is the base and the point of hypothetical range No. 2 is the apex. In this case the equation becomes:

$$V = \frac{A'}{3}\left(\frac{E_1}{W_1}\right) + \frac{A}{3}\left(\frac{E_1}{W_1}\right) = \frac{A' + A}{3}\left(\frac{E_1}{W_1}\right) \quad \textbf{(7–5)}$$

$$V = \frac{2}{3}\left(\frac{AE_1}{W_1}\right) \text{ (can be used when } A = A') \quad \textbf{(7–5a)}$$

Compute the original capacity and sediment volume for the segment next to the dam, which has only one range, by the equation

$$V = A\left(\frac{E}{W}\right) - V_0, \quad \textbf{(7–6)}$$

where the values for V, A, E, and W are as previously defined and V_0 is the volume, in acre-feet, displaced by the upstream face of the dam. For concrete dams with a vertical or nearly vertical upstream face, $V_0 = 0$. The form, "Reservoir Capacity Computation Sheet—Range Method," on pages 7–21 and 7–22 was not designed for computing volume for the segment nearest the dam, but where $V_0 = 0$, it can be adapted. If there is an upstream slope on the dam and no berm, the volume for the segment can be computed as shown below. The data and computations should appear on calculation sheets with the data and computations for the other segments. For original capacity

$$V_0 = \frac{HBL}{261{,}360} \quad \textbf{(7–7)}$$

and for sediment volume

$$V_0 = \frac{L\left(2B - \frac{EB}{WH}\right)E}{174{,}240W},$$

where E and W are as described for equation 7–3 and:

- L = length of waterline on the face of the dam, feet.
- B = perpendicular distance from the downstream range to the waterline on the face of the dam, feet.
- H = waterline elevation minus the elevation of the old streambed directly below waterline on the face of the dam, feet. If the elevation of the old streambed at this location is not known, use the maximum original depth on the downstream range.

The sum of the original capacities and the sum of sediment volumes for all segments give the total original capacity and total sediment volume, respectively, at the time of survey.

A computer program is available to perform computations by either the Dobson prismoidal formula (eq. 7–3) or the average end area equation 7–4 and equations 7–7 and 7–8. Since hand computations are tedious and prone to error, computer processing is recommended where feasible. Instructions are available from the NTC sedimentation geologists.

Contour Method

For the contour method of survey, the first step in determining sediment volume is to plot the water depths on a reservoir map. Then draw in the present contours of the reservoir basin and determine the area enclosed by each contour by planimetering. The present capacity can be computed either for a segment of the reservoir bounded by one or more ranges and intervening stretches of shoreline or for the reservoir as a whole bounded only by the shoreline. If the original capacity is not known, make an original contour map by adding present water depths and sediment depths and plotting them. Computation is as described for present capacity in the previous paragraphs. Use the following modified prismoidal equation (Eakin 1939) for the computation:

$$V = \frac{L}{3}(A_l + \sqrt{A_l A_u} + A_u) \quad \textbf{(7–9)}$$

where

- V = original capacity or present capacity, acre-feet.
- L = contour interval, feet (in the lowest prismoid, L is the vertical distance between the lowest contour and the lowest point in the bottom of the reservoir).
- A_l = area of the original lower contour in determining original capacity or area of the present lower contour in determining present capacity, acres.
- A_u = area of the original upper contour in determining original capacity or area of the present upper contour in determining present capacity, acres (in the upper-

most prismoid, A_u is equal to the area enclosed by the crest contour).

Apply this equation progressively to the prismoids, beginning with the prismoid between the lowest contour and the bottom of the reservoir. Summing the computed volumes will give the total capacity. Sediment volume is the difference between the original capacity and the present capacity. Use Form SCS–ENG–210, "Reservoir Capacity Computation Sheet—Contour Method" (fig. 7–16), in this computation.

Contour-Range Method

Compute the original volume of the segments from elevation-area data planimetered from the original contour map. Changes in volume in each segment are related to changes in the cross-sectional area of a single associated range. For example:

Segment original volume = 20 acre-ft
Original area of range cross section = 100 ft²
Resurveyed area of range cross section = 90 ft²
New segment volume = $20\left(\frac{90}{100}\right)$ = 18 acre-ft

Segment capacity loss = 20 – 18 = 2 acre-ft

The segment next to the dam is associated with its upstream bounding range. Each remaining segment is associated with its downstream bounding range.

A computer program is available to process computations for the contour-range method. This program computes vertical sediment distribution and designates sediment as submerged or aerated. Instructions are available from the NTC sedimentation geologists.

Land Surveys

This method of surveying reservoirs enables surveyors to maintain good control. The method requires laying out a measured base line and ranges.

Establish the base line along one side of the reservoir as parallel to the main valley as possible. For future resurveys, set permanent monuments on the centerline at one end of the dam and at the intersection of the centerline with the base line. Using a transit, establish the angle between the centerline of the dam and the base line. Chain the base line and set and tack-point stakes at regular intervals according to the range layout to be used. Make the base line long enough so that the last range crosses the stream channel close to the crest elevation of the emergency spillway. Additional ranges may be established upstream for above-crest deposits.

It may be necessary to turn the base line to keep it parallel to the main valley. Monument each turn in the base line. Locate the monuments where they will not be damaged or destroyed and where each can be seen from the preceding one to reestablish the base line as necessary.

Place the ranges as perpendicular to the valley as possible, and place the first range near the upstream toe of the dam. Start a pattern by placing the next range parallel to the first. Narrow the spacing near the upper end of the reservoir.

To supplement the contour information gained by surveying range lines, map the upper spillway contour and a selected lower contour. These contours provide excellent horizontal control.

Prepare a contour map by first plotting the water depths on the reservoir map. Then, using these depths and the known configuration of the basin as a guide, draw in the contours. Determine the acreage enclosed by each contour by planimetering. This can be done for a segment at a time, for several segments, or, in very small reservoirs, for the entire contour area. Then make the computations by the modified prismoidal formula (eq. 7–9). An alternative method of calculation (Heinemann and Dvorak 1965) is the stage-area curve method, which requires plotting a well-defined stage-area curve (see fig. 7–17). The area between such a curve and selected elevations on the ordinate represents the reservoir capacity between these elevations. For example, the capacity between elevations 1,050 and 1,052 of the reservoir shown in figure 7–18 is represented by the shaded area. This area can be planimetered and converted directly to capacity in acre-feet.

Although this type of survey takes longer than others, it can be accurate in measuring sediment and remaining capacity. It requires only one-tenth to one-fourth of the monuments needed to mark each range end, so less time is needed for setting permanent makers. Another advantage of the contour-range method, which is also true of the contour method, is that it yields area-capacity and elevation-capacity information. This information is not obtained in a range survey.

U. S. DEPARTMENT OF AGRICULTURE
SOIL CONSERVATION SERVICE

RESERVOIR CAPACITY
COMPUTATION SHEET
CONTOUR METHOD

SCS-210 (2-64)

MUD CREEK
NAME OF RESERVOIR

SHEET 1 OF 1

SEGMENT	CONTOUR	$V=L/3(A_l+\sqrt{A_l A_u}+A_u)$				V	ACCUMULATIVE VOLUME Acre-feet
		L/3	A_l	$\sqrt{A_l A_u}$	A_u		
all	1045.5						
	1046.0	.167	0.00	0.00	0.07	.012	.012
	1048.0	.667	0.07	0.19	0.49	.050	.062
	1050.0	.667	0.49	0.74	1.12	1.567	1.629
	1052.0	.667	1.12	1.47	1.93	3.015	4.644
	1054.0	.667	1.93	2.37	2.90	4.802	9.446
	1056.0	.667	2.90	3.41	4.00	6.877	16.323
	1058.0	.667	4.00	4.56	5.20	9.178	25.501
	1060.0	.667	5.20	5.79	6.45	11.632	37.133
					Original capacity		37.133

Figure 7–16.—Reservoir capacity—contour method.

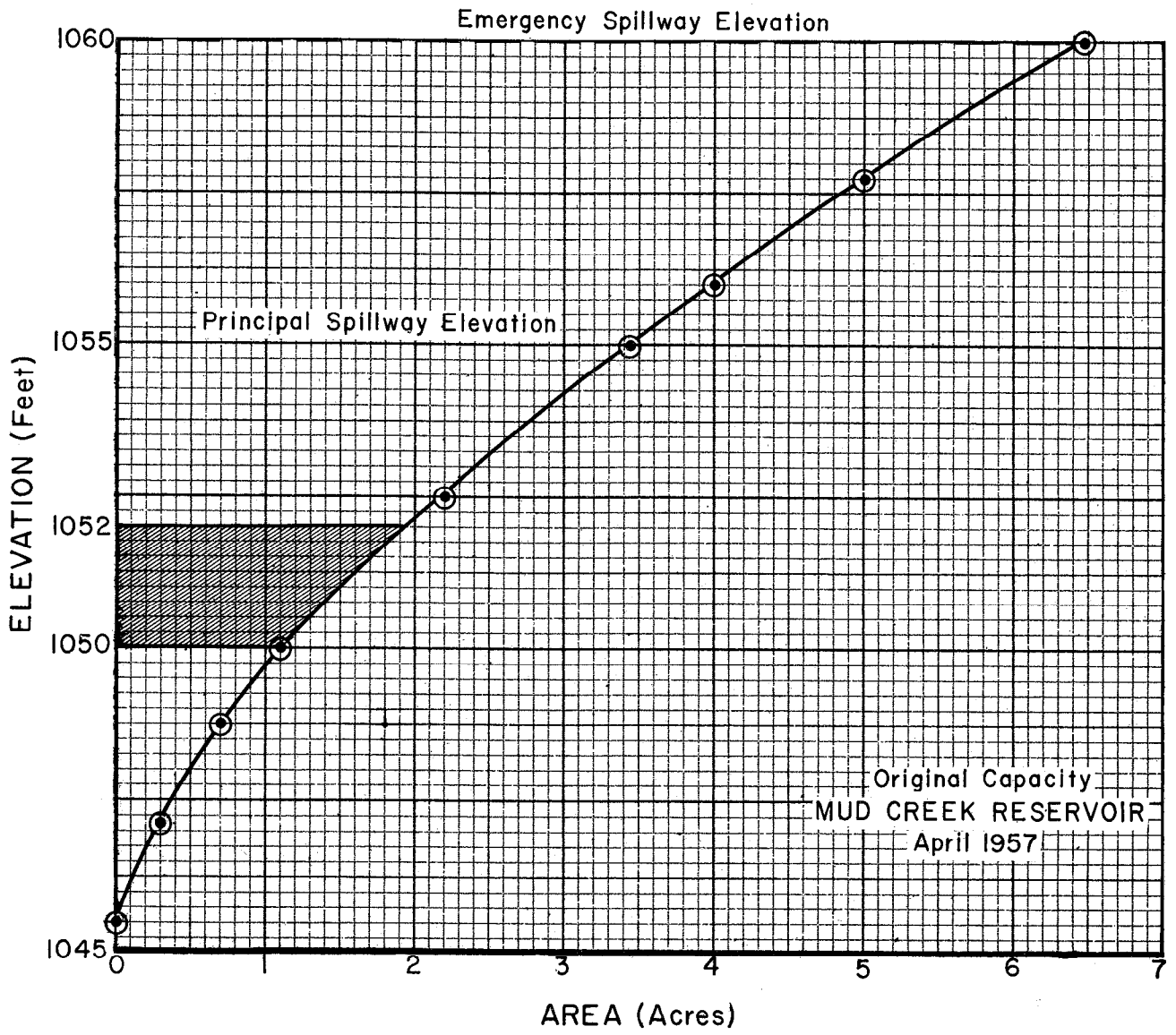

Figure 7–17.—Stage-area curve.

Survey Reports

After completing the computations, prepare a summary of survey data. Obtain enough information at the time of the survey to prepare Form SCS–ENG–34, Rev. 12–71, "Reservoir Sediment Data Summary" (fig. 7–18). Forward a copy of the completed form and a report, if one has been prepared, to the appropriate NTC for each reservoir surveyed.

A survey report is not always necessary, but if the information is readily available, a brief report of each survey may prove useful at some future date. Include in the report a brief description of the drainage area covering geology, topography and drainage, soils, land use and practices, and erosion conditions. Report land use as cropland, permanent pasture, woodland, idle, urban, or other. Get additional information for cropland, such as rotations in general use, conservation measures installed, and data so that sheet erosion can be computed.

SCS-ENG-34
REV. 12-71

RESERVOIR SEDIMENT DATA SUMMARY

U. S. DEPARTMENT OF AGRICULTURE
SOIL CONSERVATION SERVICE

Six Mile Creek, Site No. 3
NAME OF RESERVOIR

23-
DATA SHEET NO.

DAM

1. OWNER Enlo Conserv. District	2. STREAM Six Mile Creek	3. STATE New State
4. SEC. 25 TWP. 2N RANGE 4W	5. NEAREST P.O. 2 Mi. E of Nebo	6. COUNTY Carroll
7. LAT. 45° 50′ 10″ LONG. 87° 07′ 30″	8. TOP OF DAM ELEVATION	9. SPILLWAY CREST ELEV. 123.0

RESERVOIR

10. STORAGE ALLOCATION	11. ELEVATION TOP OF POOL	12. ORIGINAL SURFACE AREA, ACRES	13. ORIGINAL CAPACITY, ACRE-FEET	14. GROSS STORAGE, ACRE-FEET	15. DATE STORAGE BEGAN
a. FLOOD CONTROL	123.0	198.0	2,091.9	3,584.9	April 18, 1948
b. MULTIPLE USE					
c. POWER					
d. WATER SUPPLY	111.0	124.8	1,002.0	1,493.0	16. DATE NORMAL OPER. BEGAN
e. IRRIGATION					
f. CONSERVATION					April 28, 1948
g. INACTIVE	97.0	60.2	491.0	491.0	

17. LENGTH OF RESERVOIR 1.34 MILES; AV. WIDTH OF RESERVOIR 0.23 MILES

WATERSHED

18. TOTAL DRAINAGE AREA 10.14 SQ. MI.		22. MEAN ANNUAL PRECIPITATION 25.13 (25 yr) INCHES	
19. NET SEDIMENT CONTRIBUTING AREA 9.83 SQ. MI.		23. MEAN ANNUAL RUNOFF 1.6 (12 yr) INCHES	
20. LENGTH 5.17 MILES	AV. WIDTH 1.96 MILES	24. MEAN ANNUAL RUNOFF 865. (12 yr) AC.-FT.	
21. MAX. ELEV. 398.0	MIN. ELEV. 76.0	25. ANNUAL TEMP.: MEAN RANGE	

SURVEY DATA

26. DATE OF SURVEY	27. PERIOD YEARS	28. ACCL. YEARS	29. TYPE OF SURVEY	30. NO. OF RANGES OR CONTOUR INT.	31. SURFACE AREA, ACRES	32. CAPACITY, ACRE-FEET	33. C/I. RATIO, AC.-FT. PER AC.-FT.
4-18-48	--	--	Range-Contour (Detailed)	21 Ranges 2' CI	198.	3,584.9	4.14
6-23-64	16.18	16.18			198.	3,322.4	3.84
6-23-75	11.0	27.18			198.	3,202.0	3.70
6-23-81	6.0	33.18			198.	3,122.0	3.61

26. DATE OF SURVEY	34. PERIOD ANNUAL PRECIPITATION	35. PERIOD WATER INFLOW, ACRE-FEET			36. WATER INFL. TO DATE, AC.-FT.	
		a. MEAN ANNUAL	b. MAX. ANNUAL	c. PERIOD TOTAL	a. MEAN ANNUAL	b. TOTAL TO DATE
6-23-64	24.81	860	1,033	13,915	860	13,915
6-23-75	24.33	830	885	9,130	848	23,045
6-23-81	25.73	903	1,140	5,418	858	28,465

26. DATE OF SURVEY	37. PERIOD CAPACITY LOSS, ACRE-FEET			38. TOTAL SED. DEPOSITS TO DATE, ACRE-FEET		
	a. PERIOD TOTAL	b. AV. ANNUAL	c. PER SQ. MI.-YEAR	a. TOTAL TO DATE	b. AV. ANNUAL	c. PER SQ. MI.-YEAR
6-23-64	262.5	16.2	1.65	262.5	16.2	1.65
6-23-75	120.4	10.9	1.11	382.9	14.1	1.43
6-23-81	80.0	13.3	1.36	462.9	13.9	1.42

26. DATE OF SURVEY	39. AV. DRY WGT., LBS. PER CU. FT.	40. SED. DEP., TONS PER SQ. MI.-YR.		41. STORAGE LOSS, PCT.		42. SED. INFLOW, PPM	
		a. PERIOD	b. TOTAL TO DATE	a. AV. ANN.	b. TOT. TO DATE	a. PERIOD	b. TOT. TO DATE
6-23-64	67.4 (8)	2,423	2,423	0.45	7.3	20,380	20,380
6-23-75	69.4 (8)	1,789	2,166	0.39	10.7	14,670	18,480
6-23-81	68.8 (9)	1,948	2,126	0.39	12.9	16,280	17,930

Figure 7-18A.—Reservoir sediment-data summary.

26. DATE OF SURVEY	43. DEPTH DESIGNATION RANGE IN FEET BELOW, AND ABOVE, CREST ELEVATION											
	123–120	120–116	116–112	112–108	108–104	104–100	100–97	97–96	96–92	92–88	88–84	84–76
	PERCENT OF TOTAL SEDIMENT LOCATED WITHIN DEPTH DESIGNATION											
6-23-64	--	--	--	1	6	19	19	4	10	12	25	4
6-23-75	--	--	1	1	6	17	18	4	11	12	26	4
6-23-81	--	--	1	2	5	16	17	4	11	13	27	4

26. DATE OF SURVEY	44. REACH DESIGNATION PERCENT OF TOTAL ORIGINAL LENGTH OF RESERVOIR														
	0-10	10-20	20-30	30-40	40-50	50-60	60-70	70-80	80-90	90-100	-105	-110	-115	-120	-125
	PERCENT OF TOTAL SEDIMENT LOCATED WITHIN REACH DESIGNATION														
6-23-64	2	17	19	14	17	10	9	5	7	0					
6-23-75	1	17	18	15	17	10	10	6	5	1					
6-23-81	1	18	19	16	16	11	9	5	4	1					

45. RANGE IN RESERVOIR OPERATION

WATER YEAR	MAX. ELEV.	MIN. ELEV.	INFLOW, AC.-FT.	WATER YEAR	MAX. ELEV.	MIN. ELEV.	INFLOW, AC.-FT.

46. ELEVATION–AREA–CAPACITY DATA

ELEVATION	AREA	CAPACITY	ELEVATION	AREA	CAPACITY	ELEVATION	AREA	CAPACITY
Original	Capacity	- 1948	100	75.3	658.0			
123	198.0	3,584.9	97	60.2	491.0			
120	178.4	2,832.0	96	58.0	442.3			
116	151.8	2,394.2	92	45.7	330.0			
112	128.9	1,679.0	88	32.1	265.7			
108	109.0	1,228.3	84	21.3	170.0			
104	94.2	931.9	80	11.7	73.0			

47. REMARKS AND REFERENCES

Land Use in Watershed: 21 percent Woodland; 47 percent Pasture; 18 percent Cropland; 6 percent Idle; 8 percent Residential.

Geology: 25 percent Chaco shale; 18 percent Thomas ls.; 57 percent Orville ss.

48. AGENCY MAKING SURVEY New State Watershed Planning Party, Soil Conservation Service

49. AGENCY SUPPLYING DATA Soil Conservation Service 50. DATE Sept. 3, 1981

USDA-SCS-HYATTSVILLE, MD. 1966 April 1966

Figure 7-18B.—Reservoir sediment-data summary—continued.

For reservoirs of special interest, prepare a report so that the data can be made available to all who use them. Present the data and observations in a systematic, clear, concise arrangement and uniform style. The following outline is suggested. All the information included in the outline may not apply to a given survey and some may not have been obtained. Include any additional information that is considered important.

Outline

Abstract.—In a few paragraphs, summarize the important facts in the report, including a brief description of the reservoir, the watershed, the sediment deposits, the principal quantitative results of the survey, and the main conclusion.

Introduction.—Briefly state the purpose of the survey and the names of the survey party and participants, and acknowledge any assistance received.

General information.—Tabulations are means of presenting quantitative data and are desirable if they can be readily understood. Include the following items:

- Location
  - State
  - County (or counties); also sections, townships, and ranges where possible
  - Latitude and longitude
  - Distance and direction from nearest post office
  - Name of stream on which dam is located
- Ownership
- Purpose served
- Description of dam (type, construction material, length, height, sideslopes, elevation of spillways, and special features such as floodgates and character of foundation)
- Date dam completed (to nearest month; also average date of survey and total age to date of survey)
- Length of lake (from dam to head of backwater, and length of major arms in miles or feet)
  - Original _____
  - At time of survey _____
  - Amount shortened _____
- Area of lake at emergency spillway crest (acres)
  - Original _____
  - At time of survey _____
  - Loss from sediment deposition _____
- Storage capacity to principal spillway elevation (acre-feet)
  - Original _____
  - At time of survey _____
  - Loss from sediment deposition _____
- General character of reservoir basin
- Former sedimentation surveys (give details)
- Area of drainage basin (square miles or acres)
- General character of watershed
  - Geology
  - Topography and drainage
  - Soils
  - Land use
  - Erosion conditions
- Mean annual rainfall
- Mean annual inflow to reservoir
- Evaporation (if known)
- Draft on water-supply reservoirs (usual daily or monthly draft, season of greatest use, and draft during this period)
- Power development (where appropriate)
- Irrigation
- Method of survey
- Sediment deposits
  - Character of sediment. Describe the sediment in various parts of the reservoir and include the results of laboratory studies.
  - Distribution of sediment. Discuss the general distribution of sediment and, if feasible, illustrate with charts and graphs the average and specific depths of sediment in various parts of the basin. If the contour method was used, indicate sediment accumulation by contour intervals. Also discuss factors affecting distribution, such as configuration of basin, nature of incoming sediment, trap efficiency, drawdown, change in dam height, mass movement of sediment, and other factors whose effects are evident. Include any laboratory studies that concern distribution.
  - Sources of sediment. Describe the character and distribution of sediment in terms of source materials, slope, climate, land use, and erosion conditions. Discuss the relative importance of specific areas and soils in the watershed as sources of reservoir sediment.
  - Effects of land treatment. Describe conservation measures installed and the area in-

volved for each type. Give information about changes in land use. Include the effects of these items on sediment yield if this information is available.

Illustrations. Maps of reservoir and watershed, pertinent photographs and graphs.

Conclusions.—All interpretations, conclusions, and recommendations based on the completed study of the sedimentation and watershed conditions (unless adequately covered previously) should be presented in a final section. A completed Form SCS–ENG–34, "Reservoir Sediment Data Summary" (fig. 7–18), should be included in this section. Detailed instructions for filling out the form are available from the NTC's.

Send a copy of the completed Form SCS–ENG–34 to the NTC sedimentation geologist to keep the NTC informed of the current status of basic data collection. This information is submitted periodically by the NTC's to the National Headquarters for compiling nationwide summaries of reservoir sedimentation surveys under the auspices of the Subcommittee on Sedimentation, Interagency Advisory Committee on Water Data, and for compiling SCS-wide progress reports.

Record Maintenance

File completed records for future reference. The disposition of records depends on the nature of the record and its expected use. Records of surveys can be retained in state office files.

Surveys made in connection with developing a particular watershed work plan can be incorporated in the specific watershed file. It is desirable that each state office maintain a list of all reservoir surveys and resurveys made within the State, including disposition of the data collected.

Survey records can be sent to the National Archives. Archiving of these records is encouraged, since they can then be incorporated with records of similar surveys made by SCS on several hundred reservoirs in the country.

No data or marks of any kind may be added to records borrowed from the National Archives for use in a resurvey.

Purpose and Objectives

A flood plain is an alluvial area adjacent to a stream and subject to overflow during high waters. Flood-plain damage surveys are made to obtain physical data on the extent of damage and the rate and degree of infertile deposition, swamping, streambank erosion, flood-plain scour, valley trenching, and aggradation and degradation of channels.

The major objectives of flood-plain damage surveys are to determine:

1. Damage to soil and other resources and depreciation in land values from accelerated (modern) sedimentation.
2. Effect of sedimentation on flood conditions and flood-control problems.
3. Relative importance of various erosion sources in contributing to bottom-land damages.
4. Physical facts necessary to evaluate and project the effects of possible sediment-control measures.

Attaining these objectives requires, in most surveys, measuring the depth and areal distribution of modern sediment and erosion, and determining the relative texture and productivity of the modern sediments and the older sediments.

Preliminary Sedimentation Investigations

If field inspection indicates that erosion and sedimentation damages are appreciable and must be determined before preparing a work plan, more intensive investigations are required.

A preliminary sedimentation investigation is the first step in evaluating sedimentation and erosion damages. In this preliminary investigation determine the general extent and nature of sedimentation and erosion damages in the area considered and the approximate limits of subareas within which conditions are nearly the same. Select representative areas within the problem region for detailed sampling and investigation. Also determine whether location, rates, and kinds of deposition in the flood plain represent present conditions or whether measurement may not reflect substantial recent changes in the watershed, such as large increases or decreases in channel capacity or sediment supply by natural or artificial means. These

findings determine the location and interpretation of detailed flood-plain sedimentation surveys.

Also include in the preliminary investigation a search for any available survey records containing data that can be compared with present conditions to measure the rate of channel or valley aggradation or harbor filling. These survey records may be highway or railway bridge cross sections or surveys for navigation, levee construction, drainage, irrigation, or other engineering purposes.

Make a traverse of representative parts of the area and examine the valley conditions. Make test borings and examine streambanks and other exposures that show the vertical sequence of flood-plain deposits. At each location, record size and condition of the stream channel; nature of channel sediment; soil texture; land use; apparent productivity of agricultural land; indications of sediment deposition rates such as buried fenceposts and trees; and types of sediment damage and percentage of land involved in each type. Many random test borings are usually required. Determine the source of harmful sediment by inspecting the eroding areas and comparing them with the sediment deposits causing damage.

Inquire among local residents, landowners, public officials, and other informed persons for any pertinent information about sediment deposition rates, extent and nature of associated damages, and location of areas of particularly rapid or harmful deposition.

Detailed Sedimentation Investigation

Developing the Plan

If the preliminary sedimentation investigation indicates that the sediment damages are important enough to justify detailed investigation, prepare a plan for further investigation. Specify the types of investigations needed and estimate the personnel and time required. Include either a sketch map showing the generalized or tentative location of ranges, sampling-survey areas, and other work areas, or a summary listing the areas to be surveyed in detail, approximate numbers of ranges to be bored, and cross sections to be profiled.

Boring and Logging

Thickness and distribution of the modern deposit are usually important in determining the nature and extent of sediment damage. Therefore, the modern sediment deposits must be measured as a basis for estimating past damage and predicting future rates and trends of sedimentation and sediment damage. For valley deposits, make test borings at selected locations to measure the thickness of modern deposits or measure the surface elevations.

To provide optimum working conditions and avoi locations where local conditions could make identification of the thickness of modern deposits especially difficult, determine the exact location of test borings in the field. Locate borings to show ma jor changes in configuration of the base of modern deposits.

Record pertinent information such as texture, color, presence or absence of concretions and other inclusions, depth to water table, acidity, and presence or absence of organic matter. For each tes hole, estimate the depth to the base of the modern deposits and record it in the notes. Keep these records of boring either in a field notebook or on Standard Logging Form SCS–ENG–533. Include th date, the identification number assigned to each range and to each hole on a range, the approximate spacing and direction of numbering of holes, and the distance and direction of streambanks from the nearest holes. Also include the distance from the outer margins of flood-plain deposition to the nearest boring, the approximate location and bearing of the range, and a field location sketch.

Interpreting Test-Hole Data

The degree of damage to flood plains is usually determined from the test-hole data. Estimate the damage (to the nearest 10 percent) to the productiv capacity of the original soil by determining the depth and texture of the deposited sediment and estimating the loss. As sediment depth increases and texture becomes coarser, the degree of damage increases. If the original soil was a highly productive silt loam, the damage caused by deposits of relatively infertile sands would be high. The same type of sediment deposited to the same depth on an original sandy soil low in organic matter, nitrogen, phosphorus, and potassium would cause less damage. Recovery of the new sediment to the original soil condition would be faster and the re-

maining damage would be lower than that for the silt loam soil.

Other means of determining the present damage are comparing crop yields on land on which sediment has been deposited with crop yields on similar land without any sediment deposits and interviewing owners or operators who can furnish information on reductions in their crop yields caused by sediment deposition.

Estimates of damage and recovery rates under flood-free conditions are shown in table 7–1.

In general, time for recovery increases with percentage of damage. Full recovery normally does not occur if the damage is 40 percent or more. It should be emphasized that estimates of recovery must be based largely on judgment, keeping in mind that both damage and recovery vary according to the kind of soil damaged and the type of sediment deposited.

Survey Methods

To obtain the most usable damage estimates, divide the flood plain into reaches. Because the geology, economics, hydrology, and hydraulics of the flood plain are interrelated, consult other members of the planning party in doing so. Make each reach as uniform as possible.

The two methods of determining the amount of flood-plain damage are the mapping method and the range method. The mapping method is used if sediment deposition or erosion is concentrated in small, scattered areas. If sediment deposition or erosion is widely distributed within the valley, the range system of survey provides more representative sampling. Both methods give similar results if damage is evaluated with a high degree of accuracy and consistency and if the selected ranges are representative. Estimates should be prepared in consultation with SCS specialists, representatives of cooperating agencies, and local residents.

Mapping Method

Mapping the flood plain is the most precise method for locating the damages. These surveys can be made on representative samples or on the entire flood plain. If the surveys are made on representative samples, expand the results to the entire area within the designated reach. If they are made on the entire flood plain, record the information by the designated reach.

Determine and map the extent, location, and percentage of flood-plain damage on a base, preferably aerial photographs. The following legend is satisfactory for such surveys and can be adapted to local conditions.

Deposition on Flood Plains

- 0 = No deposition
- 1 = 1 to 33 percent of area covered with damaging sediment
- 2 = 33 to 66 percent of area covered with damaging sediment
- 3 = 66 to 100 percent of area covered with damaging sediment

Swamping

- 0 = No swamping damage
- 1 = Bottom land formerly suitable for cultivation now too wet for crops but can be used for pasture

Table 7–1.—Flood-plain damage and estimated recovery period by depth and texture of sediment deposit

Sediment deposit				
Depth	Texture	Damage	Recovery period	Damage remaining after recovery
Inches		*Percent*	*Years*	*Percent*
4–8	Fine and coarse sand and silt	20	5	0
4–8	Medium and coarse sand	40	10	10
8–12	Fine and coarse sand	40	10	10
12–14	Coarse sand	60	20	30
12–24	Coarse sand and gravel	90	30	50

2 = Bottom land formerly suitable for cultivation now too wet for agricultural use but suitable for timber

Scour

0 = No scour damage
1 = 1 to 33 percent of area scoured
2 = 33 to 66 percent of area scoured
3 = 66 to 100 percent of area scoured

Enter a three-digit mapping symbol, representing deposition, swamping, and scour in that order, in each delineated area of flood plain to indicate the location, type, and degree of damage. Also indicate the geologist's estimate of the physical damage caused by deposition or scour expressed as a percentage. Thus 1–0–0 (40 percent) indicates an area of flood plain of which 1 to 33 percent is covered with infertile sediment causing a 40-percent damage to that area; 0–2–0 indicates an area of flood plain that was previously cultivated but now, because of accelerated swamping, can support only woodland growth. Also record areas of no damage, 0–0–0, so that the damages can be correctly distributed to the entire flood plain.

Measure and tabulate the mapped information. Be sure to account for the area occupied by the channel. Figure 7–19 illustrates a flood-damage map. Table 7–2 shows how the mapped information has been tabulated. This example shows deposition and scour damage on the same areas each year and an increasing area of swamping. Various combinations can be expected in different damage areas.

Range Method

A range system sampling procedure is especially useful if the various types of damages are scattered along flood-plain reaches. Ranges are located randomly within the reach on the premise that a representative sample of the total flood plain will thus be obtained. Do not deliberately locate a range to cross either high or low damage points, to get out of a swamp onto high ground, or to get out of the woods into the open. Doing so could invalidate the entire survey. Although each range should be a straight line, the locations of bore holes or other observations can deviate several feet from this straight line for convenience.

Spacing of the ranges depends on the length of the reach and the regularity of damages within it. A minimum of three ranges per reach is desirable and a maximum of 15 is reasonable. The distance between ranges should not exceed 1 mile nor be less than 1/4 mile. About one-twentieth of the length of the valley under investigation is the usual distance between ranges, but spacing varies according to the conditions found in reconnaissance or during the detailed survey. Space the ranges closer where identifying the base of modern deposits is difficult or where the thickness of modern deposits is irregular. Where the base of modern deposits is easy to identify and the depth of deposits is fairly uniform, space the ranges wider. Locate the ranges on a base map.

Summarize the weighted sediment damage to the flood plain (by area) as shown in table 7–3 for Reach B as drawn in figure 7–19. Send this summary to an economist for monetary evaluation.

Insofar as practical, include the surveyed cross section used for hydrologic study in the flood-plain ranges. Where they are the same, the distance measurements can be obtained from the plotted cross sections. As a word of caution, the hydrologist needs cross sections at control points that may not be typical of flood-plain conditions. If the ranges do not include surveyed cross sections, pace the distance or use an aerial photograph as a base map to determine the distance. A minimum of four holes is usually required on each range. Generally, space the holes 100 to 300 ft apart in a valley 1 mi or less wide. Show the linear extent of each type of damage along each range and also record the percentage of damage.

Record all data on a field sheet as shown in table 7–4. Prepare a separate sheet for each range.

In summarizing the flood-plain data, first summarize the data on each field sheet. This can be done on a weighted-average basis or by individual increments, depending on the kind of data desired by the economist. Following is an example of data summarized on a weighted-average basis for damages caused by infertile deposits.

100 linear feet is damaged 10 percent by infertile deposits;
100 linear feet is damaged 20 percent by infertile deposits; and
50 linear feet is damaged 90 percent by infertile deposits

Total for range: 250 linear ft is damaged by infertile deposits. The weighted average damage is 30 percent, i.e.

$$\frac{(100 \times 10) + (100 \times 20) + (50 \times 90)}{250} = 30 \text{ percent}$$

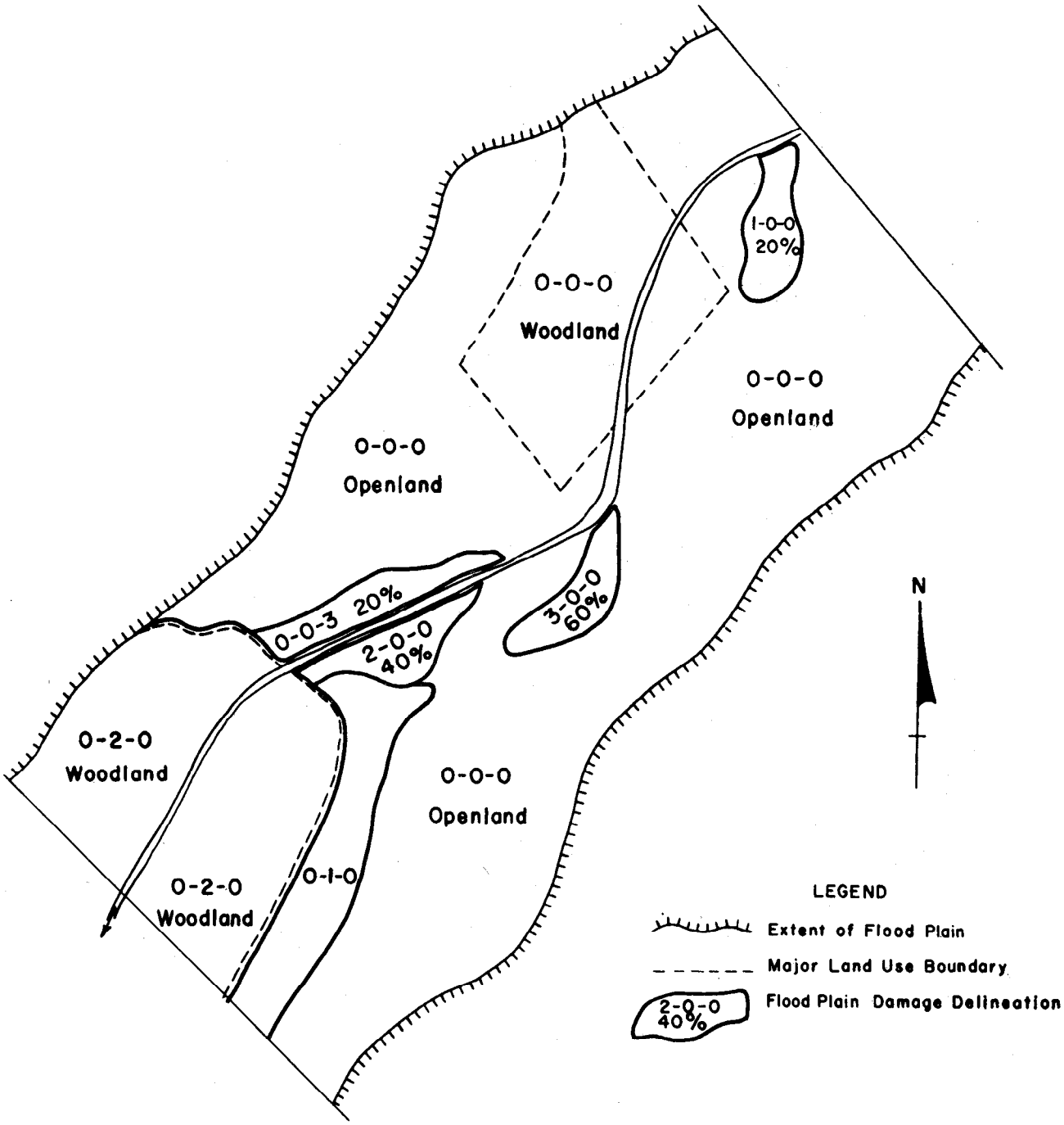

Figure 7-19.—Flood-plain damage survey.

Table 7-2.—Type and extent of physical land damage, Reach B

Extent	Type of damage						
	Deposition			Swamping		Scour	No damage
	1	2	3	1	2	3	
Area (acres)	7	7	6	23	77	8	300
Damage (percent)...	20	40	60	—[1]	—[1]	20	—

[1]To be determined in consultation with the economist.

Table 7-3.—Summary of flood-plain damage, Reach B

Type of damage	Area	Period	Rate	Damage
	Acres	*Years*	*Acres/year*	*Percent*
Deposition	20	1	20	38
Swamping				
1	23	40	0.6	—[1]
2	77	40	1.9	—[1]
Scour	8	1	8	20

[1]To be determined in consultation with the economist.

Summarize other types of flood-plain damage in the same way.

Next summarize the damage within each reach. This is most easily done by using field summary sheets. Use a separate summary sheet for each reach and itemize the totals and weighted averages computed for each range in the columns. Summarize the columns, following the procedure used to summarize individual ranges, to determine the average range for each reach of flood plain (see table 7-5). Table 7-6 shows a method of computing average values for a reach.

Table 7-4.—Sample worksheet for range data summary

Range 1 Reach A
Mud Creek Watershed Survey

From station to station[1]		0–100	100–120	120–220	220–240	240–260	260–310	310–End	Totals and weighted average
Infertile deposits	Distance (ft)	100	—	100	—		50	—	250
	Damage (%)[2]	10	—	20	—		90	—	30
Swamping	Distance (ft)	—	20	—	—		—	—	20
	Damage (%)	—	40	—	—		—	—	40
Streambank erosion	Distance (ft)	—	—	—	20		—	—	20
	Damage (%)	—	—	—	90		—	—	90
	Average depth (ft)	—	—	—	3		—	—	3
	Net X-sectional area (ft²)	—	—	—	60		—	—	60
Flood-plain scour	Distance (ft)	—	—	—	—		—	—	—
	Damage (%)	—	—	—	—		—	—	—
	Average depth (ft)	—	—	—	—		—	—	—
	Net X-sectional area (ft²)	—	—	—	—		—	—	—
Valley trenching	Distance (ft)	—	—	—	—		—	—	—
	Damage (%)	—	—	—	—		—	—	—
	Average depth (ft)	—	—	—	—		—	—	—
	Net X-sectional area (ft²)	—	—	—	—		—	—	—
Texture	Gravel (%)	—	—	—	80		60	—	—
	Sand (%)	—	—	—	10		40	—	—
	Fines (%)	100	100	100	10				

Mud Creek Channel

[1]All measurements are from left side of valley looking downstream unless otherwise noted.
[2]To nearest 10 percent.

Table 7–5.—Computation of the weighted averages of types of damage, Reach A

1 Type of damage	2 Distance	3 Damage	4 Damage Factor (Cols. 2 x 3)		5 Averages
	Feet	*Percent*			
Infertile deposits	250	30	7,500		(av. distance)
	210	30	6,300		$\frac{1,110}{5} = 222$ ft
	260	20	5,200		
	210	40	8,400		
	180	40	7,200		(wt. damage)
	1,110		34,600		$\frac{34,600}{1,110} = 31\%$
Swamping	20	40	800		(av. distance)
	150	30	4,500		$\frac{232}{4} = 58$ ft
	35	50	1,750		
	27	40	1,080		
	232		8,130		(wt. damage)
					$\frac{8,130}{232} = 35\%$
				Area (ft²)	
Streambank erosion	20	90	1,800	60	(av. distance)
	18	90	1,620	72	$\frac{125}{5} = 25$ ft
	35	60	2,100	105	
	32	80	2,560	128	(wt. damage)
	20	80	1,600	80	$\frac{9,680}{125} = 77\%$
	125		9,680	445	
					(av. area)
					$\frac{445}{5} = 89$ ft²
					(av. depth)
					$\frac{445}{125} = 3.6$ ft
Scour	0	0	0		(av. distance)
	0	0	0		$\frac{36}{5} = 7.2$ ft
	0	0	0		
	10	60	600		
	26	60	1,560		(wt. damage)
	36		2,160		$\frac{2,160}{36} = 60\%$
				Area (ft²)	
Scour depth	0	0		0	(av. depth)
	0	0		0	$\frac{82}{36} = 2.3$ ft
	0	0		0	
	10	[1]3		30	
	26	[1]2		52	(av. cross sec.)
	36	[1]5		82	$\frac{82}{5} = 16.4$ ft²

[1]Depth in feet.

Table 7-6.—Reach damage summary from range data
Reach A Summary
Mud Creek Watershed Survey

From station to station[1]		Range 1	Range 2	Range 3	Range 4	Range 5	Total	Average
Infertile deposits	Distance (ft)	250	210	260	210	180	1,110	222
	Damage (%)[2]	30	30	20	40	40		31
Swamping	Distance (ft)	20	150	0	35	27	232	46.4
	Damage (%)	40	30	0	50	40		35
Streambank erosion	Distance (ft)	20	18	35	32	20	125	25
	Damage (%)	90	90	60	80	80		77
	Average depth (ft)	3	4	3	4	4		3.6
	Net X-sectional area (ft²)	60	72	105	128	80		89
Flood-plain scour	Distance (ft)	0	10	0	26	0	36	7.2
	Damage (%)	0	60	0	60	0		60
	Average depth (ft)	0	3	0	2	0		2.3
	X-sectional area (ft²)	0	30	0	52	0		16.4
Valley trenching	Distance (ft)	—	—	—	—	—		—
	Damage (%)	—	—	—	—	—		—
	Average depth (ft)	—	—	—	—	—		—
	X-sectional area (ft²)	—	—	—	—	—		—
Texture	Gravel (%)	0	0	0	0	0		—
	Sand (%)	80	95	95	95	95		—
	Fines (%)	20	5	5	5	5		—

[1]All measurements from left side of valley, looking downstream, unless otherwise noted.
[2]To nearest 10 percent.

Next, expand the computed damage to the entire area of the reach. If the area of the flood plain can be obtained from maps or aerial photographs, divide the area of the reach by the average range length to obtain a valley length factor in acres per foot of width. This figure multiplied by the average width damaged on the ranges is the area damaged in the reach. An example of how to tabulate the area damaged by infertile deposits follows.

1	2	3	4	5	6	7
Reach	Area of reach	Average range length	Valley length factor (Col. 2 ÷ Col. 3)	Average width damaged	Area damaged (Col. 4 × Col. 5)	Reach damage (Col. 6 × 100 ÷ Col. 2)
	Acres	*Feet*	*Acres/foot*	*Feet*	*Acres*	*Percent*
A	432	714	0.605	222	134	31

If the area of the reach is not known, measure the mileage of stream valley in each reach, using large-scale maps or field surveys. Then determine the acreage of flood plain damage to date by the type of damage in each reach from the following equation:

$$a = 0.121bc \qquad \textbf{(7-10)}$$

where

a = area damaged to date, acres
b = linear distance damaged on the average range, feet
c = length of stream valley in this reach, miles
0.121 = a conversion factor

$$\left(\frac{5{,}280 \text{ ft/mi}}{43{,}560 \text{ ft}^2\text{/acre}}\right)$$

The following example shows how damage data obtained by this procedure can be tabulated by reach.

1	2	3	4	5	6	7
Reach	Valley length (c)	0.121(c) (0.121 × Col. 2)	Average width damaged (b)	Area damaged (a) (Col. 3 × Col. 4)	Area of reach	Damage
	Miles	*Acres/foot*	*Feet*	*Acres*	*Acres*	*Percent*
A	5	0.605	222	134	432	31

The present condition of the flood plain can be determined by these methods. It is important that the physical data be complete and usable by an economist.

Deposition and Scour Damages

Damage figures provided to an economist for monetary evaluation should be reduced to average annual values. To project the future rate of damage from the historical average annual rate of damage, first determine whether the present rate of damage is in equilibrium, is increasing, or is decreasing. Also supply this information to the economist so that he or she can properly estimate future damages with and without installation of the project. Also work closely with the agronomist and soil scientist in determining physical damages from loss of productivity.

Equilibrium Damages

New damage by deposition or scour occurring each year can be offset by recovery of old damaged areas. Where such a condition exists, the benefits to be derived are the result of a reduced annual damage rate that shifts the equilibrium point in the direction of less income lost. Determine the total area damaged and the loss of productivity and estimate the amount of damaged area that could be expected to recover under flood-free conditions.

Increasing Damages

Damage may be increasing in extent or severity or both. In such a case, provide the economist with an estimate of the present damage rate, the rate at which the damage is increasing, and the eventual limits of the damage.

Decreasing Damages

Damaged areas may be recovering under present conditions; the damage can decrease in extent or in severity. If so, provide the economist with an estimate of the present damage rate, the rate at which the damage is decreasing, and the acreage that will be subject to damage after the limits of such decrease are reached.

Channel Erosion Damages

One method of reducing the total observed channel erosion to an average annual value is to compare the observed amount recorded on the field sheets with the average annual value determined by surveys or by aerial photographs made on different dates.

Since earlier flood-plain cross sections from engineering surveys are seldom available, it is more convenient to use aerial photographs made on different dates. Locate the control points common to each set of photos and carefully measure the change in position of the eroding bank in relation to these fixed points. Many measurements are necessary. Reduce the average distance of channel bank movement between photograph dates to an average annual value by dividing the distance by the number of years between photographs.

This value is usually suitable for estimating the rate of land loss and land depreciation from streambank erosion. Adjustments must be made, however, for serious valley trenching where, during the economic evaluation period, the headcut will advance into topographically or geologically different materials or the drainage above the advancing headcut will become significantly reduced. Make these adjustments according to established procedures.

To determine damage from lateral movement of channels, measure the actual area eroded or voided and depreciate it. The future damage may have little relation to the past damage even though the physical rate may be the same. For example, a valley trench in the past has progressed through relatively low-value land, but the advancing headcut in the future may engulf more valuable property, such as farmsteads, bridges, and orchards in its path. Thus, the direction of channel erosion as well as the rate becomes important in evaluating damage from channel erosion.

In computing physical damage by channel erosion, determine the annual rate at which land acreage is actually eroded or voided and provide this information to the economist. Work closely with the economist to determine the acreage to be depreciated. Consider the effects of channel erosion on tillage operations, ground levels, and isolation of farm fields, as well as other damages that can be evaluated.

Swamping Damages

Provide the economist with data concerning two phases of swamping damage.

Treat the first phase, which is the progressive swamping of flood-plain land now unswamped, as an incremental or increasing damage. Establish a rate of swamping, in acres per year, by dividing the acreage now swamped (determined from the flood-plain survey) by the length of time (usually determined by local interview) required to create the damage. Benefits will accrue to now unswamped flood plain through the elimination of reduction of this rate by project measures. Therefore, it must be known that some of the flood plain is still subject to progressive swamping. In no instance may the product of the rate of swamping and the evaluation period (in years) exceed the remaining area subject to such damage.

The second phase concerns the flood plain already damaged by swamping. In many places this land has also received deposits that will influence both the rate and capability of its recovery. The recovery of the land already swamped, after proper consideration of the influence of the deposition, is termed a swamping damage reduction.

Furnish the following items to the economist for use in evaluating swamping damages and swamping-damage-reduction benefits:

1. Rate and intensity (in percent or degree) of progressive swamping.
2. Area of unswamped flood plain subject to progressive swamping.
3. Area of flood-plain land already swamped.
4. Damage to land already swamped (in percent).
5. Estimated recovery period (in years) for land already swamped.
6. Estimated damage (in percent) remaining after recovery of swamped land.

Summarize all information developed from the flood-plain survey in tabular form as shown in table 7–7.

Table 7-7.—Summary of flood-plain damage, Reach A

Type of damage	Average length of range damaged	Area	Damage	Recovery period	Damage remaining after recovery
	Feet	*Acres*	*Percent*	*Years*	*Percent*
Infertile deposits	222	134	31	10	0
Swamping	46.4	26.9	37	15	10
Streambank erosion	25	15	77	0	—
Scour	7.2	4.4	60	0	—
Valley trenching	—	—	—	—	—

References

Eakin, H.M. 1939. Silting of reservoirs, revised by C.B. Brown. U.S. Dep. Agric. Tech. Bull. 524, 168 p.

Gottschalk, L.C. 1952. Measurement of sedimentation in small reservoirs. Trans. Am. Soc. Civ. Eng. 117:59–71.

Heinemann, H.G. 1963. Using the gamma probe to determine the volume-weight of reservoir sediment. Internat. Assoc. Sci. Hydrol., Symp. on Land Erosion, Bari, Italy, p. 410–423.

Heinemann, H.G., and V.I. Dvorak. 1965. Improved volumetric survey and computation procedures for small reservoirs. Fed. Inter-Agency Sediment. Conf. 1963 Proc. U.S. Dept. Agric. Misc. Publ. 970, p. 845–856.

Soil Conservation Service, U.S. Department of Agriculture. 1966. Procedure for determining rates of land damage, land depreciation, and volume of sediment produced by gully erosion. Engineering Division Tech. Release No. 32, Geology.

Soil Conservation Service, U.S. Department of Agriculture. 1979. Engineering layout, notes, staking, and calculations. Engineering Division Tech. Release No. 62.

U.S. Geological Survey, U.S. Department of the Interior. 1979. Index to water-data acquisition. Office of Water Data Coordination, Reston, Va.

U.S. Weather Bureau, U.S. Department of Commerce. 1961. Rainfall frequency atlas of the United States. Tech. Pap. No. 40.