United States
Department of
Agriculture

**Soil
Conservation
Service**

National
Engineering
Handbook

Use bookmarks and buttons to navigate the document

Section 15

Irrigation

Chapter 7

Trickle Irrigation

Contents

	Page
Preface	vi
Description	7-1
Types of systems	7-1
Drip	7-1
Subsurface	7-2
Bubbler	7-2
Spray	7-2
Advantages	7-2
Water and farm operation cost savings	7-2
Use of saline water	7-3
Use of rocky soils and steep slopes	7-3
Disadvantages	7-4
Cost	7-4
Clogging	7-4
Lack of uniformity	7-4
Salt accumulation	7-4
Other hazards	7-4
Benefits obtained and safeguards required with fertilizer and chemical injections	7-5
Fertilizer	7-5
Nitrogen	7-5
Phosphorus	7-6
Potassium	7-6
Trace elements	7-6
Chemicals to control precipitates and organic deposits	7-6
Calcium and iron	7-6
Algae and slime	7-6
Iron bacteria	7-7
Treatment for precipitates, algae, and slime	7-7
System components	7-8
Control head	7-8
Pumping station	7-8
Water-measuring devices	7-8
Fertilizer and chemical injection equipment	7-8
Valves	7-9
Sediment removal	7-9
Main and submain lines	7-13
Manifolds	7-13
Laterals	7-13
Emitters	7-15
Flow controls and pressure regulators	7-15
Hand-operated pressure controls and on-off valves	7-18
Sequential operation	7-18
Partial automation	7-18
Full automation	7-18
Operation and maintenance	7-19
Soil-plant-water considerations	7-20
Area wetted	7-20
Percent area wetted	7-22
Meeting irrigation water requirements	7-23
Maximum net depth of application	7-23
Consumptive use rate	7-24

Page
Seasonal transpiration . . . 7-24
Net depth of application . . . 7-24
Gross water application . . . 7-24
Seasonal irrigation efficiency . . . 7-25
Gross seasonal depth of application . . . 7-25
Gross seasonal volume . . . 7-26
Plant response . . . 7-26
Optimum moisture levels . . . 7-26
Salinity control . . . 7-27
Crop tolerance and yield . . . 7-27
Leaching requirement . . . 7-27
Design procedures . . . 7-29
Design criteria . . . 7-29
Emitter selection criteria . . . 7-30
General suitability . . . 7-31
Sensitivity to clogging . . . 7-31
Manufacturing variation . . . 7-32
System coefficient of manufacturing variation . . . 7-32
Relation of pressure to discharge . . . 7-33
Relation of temperature to discharge . . . 7-34
Connection losses . . . 7-34
Performance . . . 7-34
Discharge exponent . . . 7-35
Types of emitters . . . 7-36
Long-path emitters . . . 7-36
Tortuous- and short-path emitters . . . 7-37
Orifice emitters . . . 7-37
Twin-chamber tubing . . . 7-37
Vortex emitters and sprayers . . . 7-37
Compensating emitters . . . 7-37
Flushing emitters . . . 7-38
Emitter operating characteristics . . . 7-38
Discharge . . . 7-38
Average pressure . . . 7-39
Emission uniformity . . . 7-39
Allowable pressure-head variation . . . 7-40
Total system capacity . . . 7-42
Pump operating time per season . . . 7-42
Net water-application rate . . . 7-43
Computing injection of fertilizer and chemicals . . . 7-43
Pipeline hydraulics . . . 7-44
Friction loss in pipelines . . . 7-44
Head losses through fittings . . . 7-46
Multiple-outlet pipeline losses . . . 7-47
Dimensionless pipe-friction curve . . . 7-47
Economic pipe-size selection . . . 7-48
Life-expectancy costs . . . 7-49
Economic pipe-selection charts . . . 7-52
Lateral line design . . . 7-54
Characteristics . . . 7-54
Spacing of manifolds . . . 7-56

Page

Location of manifolds . . . 7-56
Pressure difference . . . 7-57
Manifold design . . . 7-58
Characteristics . . . 7-58
Economic-chart design method . . . 7-60
General graphical-design method . . . 7-64
Alternative graphical-design method . . . 7-69
Estimating pressure loss from pipe friction . . . 7-70
Locating the H_m line and estimating $\triangle H'_m$ . . . 7-70
Sample designs for trickle irrigation systems . . . 7-71
Drip system . . . 7-71
Design factors . . . 7-71
Lateral line design and system layout . . . 7-76
Manifold design . . . 7-79
Main-line design . . . 7-81
Total dynamic head . . . 7-83
System design summary . . . 7-83
Spray system . . . 7-84
Design factors . . . 7-84
Lateral line design and system layout . . . 7-88
Manifold design . . . 7-89
Main-line design . . . 7-93
Total dynamic head . . . 7-94
System design summary . . . 7-94
Line-source system . . . 7-94
Design factors . . . 7-96
Lateral line design and system layout . . . 7-98
Manifold design . . . 7-98
Main-line design . . . 7-100
Total dynamic head . . . 7-100
System design summary . . . 7-100
Field evaluation . . . 7-101
Equipment needed . . . 7-101
Field procedure . . . 7-101
Using field data . . . 7-102
Average depth of application . . . 7-102
Volume per day . . . 7-106
Emission uniformity . . . 7-106
Gross application required . . . 7-107
Application efficiencies . . . 7-107
Appendix A—Nomenclature . . . 7-109
Appendix B—Pipe friction-loss tables . . . 7-113
Appendix C—List of equations . . . 7-126

Figures

		Page
7–1	In-line drip emitter	7-1
7–2	Drip system for grapes, leaving much of soil surface dry	7-2
7–3	Drip system on slope of avocado ranch	7-3
7–4	Typical soil moisture pattern under trickle irrigation, showing salt accumulation	7-4
7–5	Basic components of a trickle irrigation system	7-8
7–6	Pressure-differential injection system	7-9
7–7	Valves at the head of a trickle irrigation system	7-9
7–8	Effect of flow rate on the maximum particle size passing through a typical free-flow sand filter with media of various sizes	7-12
7–9	Manifold layout showing inlet connection uphill from center and showing pressure-regulated manifolds	7-13
7–10	Various lateral layouts for a widely spaced permanent crop	7-14
7–11	Single-exit long-path emitter	7-16
7–12	Multiexit long-path emitter	7-16
7–13	Single-exit orifice-type emitter	7-16
7–14	Orifice-vortex-type emitter	7-16
7–15	Twin-wall emitter lateral	7-16
7–16	Flushing-type emitter	7-17
7–17	Typical means for connecting emitters to laterals	7-17
7–18	Wetting pattern profiles for equal volumes (12 gal) of water applied at three rates to a dry sandy soil	7-21
7–19	Relationship between vertical and horizontal water movement in a dry sandy soil for various amounts of water and various application rates	7-21
7–20	Idealized wetting patterns in a homogeneous fine sandy soil under a drip and a spray emitter	7-22
7–21	Hypothetical relation of potential production to percent area wetted	7-23
7–22	Discharge variations resulting from pressure changes for emitters with various discharge exponents (x)	7-33
7–23	Emitter-connection loss (f_e) values for various sizes of barbs and inside diameters of laterals	7-34
7–24	Graphical method for determining the discharge exponent (x) in a sample calculation	7-36
7–25	Cross section of a long-path emitter that can be opened for easy cleaning	7-36
7–26	Cross section of a continuous-flushing emitter	7-38
7–27	Typical two-station split-flow layout for trickle irrigation system with Blocks I and III, or II and IV, operating simultaneously	7-39
7–28	Distribution of a pressure head in a subunit	7-41
7–29	Combined effect of pressure-head and manufacturing variations on discharges of individual emitters	7-41
7–30	Darcy-Wisbach f-values for 1/2-in. (0.58-in. inside diameter) trickle irrigation hose	7-45
7–31	General friction curve for a multioutlet pipeline that has uniform diameter, uniform spacing between outlets, and uniform flow per outlet	7-48
7–32	Influence of pipe size on fixed, power, and total costs	7-49
7–33	Economic pipe-size selection chart for polyvinyl chloride thermoplastic IPS (iron pipe size) pipe having minimum acceptable standard SDR (standard dimension ratio) ratings	7-50
7–34	Dimensionless sketch showing terms used in numerical solution of optimum position for manifold	7-57
7–35	Graph for selecting location of inlet to a pair of tapered manifolds on a slope	7-59
7–36	Standard manifold friction curves for 2-gpm outlet every 20 ft.	7-62
7–37	Standard manifold friction curves for 6-gpm outlet every 60 ft.	7-63
7–38	Graph for determining manifold pipe-friction adjustment factors for trapezoidal subunits	7-65
7–39	Dimensionless manifold friction curves scaled to represent manifold flow rate (q_m) = 178 gpm through each size of pipe	7-66
7–40	Overlay for design of manifolds (1), (2), and (3) using the general graphical-design method	7-67

Page

7–41 Friction curve overlay to demonstrate graphical method using a standard manifold curve for designing a tapered manifold for a steep slope 7-68
7–42 Friction curve overlay demonstrating the graphical solution for using standard manifold curves to design tapered manifolds with a given allowable manifold pressure variation $(\triangle H_m)_a$ 7-70
7–43 Drip-system data for a deciduous orchard in the Central Valley of California 7-72
7–44 Orchard layout with sample design for a drip irrigation system 7-73
7–45 Drip-system design factors for a deciduous orchard in the Central Valley of California 7-74
7–46 Friction curve overlay to demonstrate graphical solution of manifold positioning and $\triangle h$ (difference in pressure head along the lateral) 7-77
7–47 Friction curve overlay to demonstrate graphical solution for determining manifold friction loss (H_f) for a drip system 7-81
7–48 Spray-system data for a citrus grove in Florida 7-85
7–49 Citrus grove with spray irrigation system 7-86
7–50 Spray-system design factors for a citrus grove in Florida 7-87
7–51 Plot of spray diameter vs. emitter pressure developed from manufacturer's data for 0.04-in.-diameter orifice 7-88
7–52 Friction curve overlay to demonstrate graphical solution for determining manifold friction loss (H_f) for a spray system 7-90
7–53 Line-source-system data for Texas tomato field 7-95
7–54 Tomato field with line-source drip irrigation 7-96
7–55 Line-source-system design factors for Texas tomato field 7-97
7–56 Form for evaluation data 7-103
7–57 Field measurement of discharge from an emitter 7-106

Tables

7–1 Cycling method characteristics of a trickle irrigation system 7-17
7–2 Estimates of area wetted (A_w) in various soils 7-20
7–3 Seasonal transpiration ratios for arid and humid regions with various soil textures and rooting depths 7-26
7–4 Minimum (min) and maximum (max) values of EC_e for various crops 7-28
7–5 Test characteristics of emission devices 7-35
7–6 Reduction coefficient (F) for multiple-outlet pipeline friction-loss computations in which the first outlet is a full spacing from the pipe inlet 7-47
7–7 Dimensionless data for plotting friction curves for multiple-outlet pipelines 7-49
7–8 Present-worth and annual economic factors for an assumed 9-percent annual rise in energy costs with various interest rates and life expectancies 7-51
7–9 Scaled values of $\triangle H_m/(L/100)$ for constructing a set of dimensionless manifold friction-loss curves for manifold flow rate (q_m) = 178 gpm and reduction coefficient to compensate for discharge (F) = 0.38 7-65
7–10 Scalar ratios (JF') for constructing dimensionless curves of x/L vs. $\triangle H_m/(L/100)$ for various field-shape factors (S_f) 7-66

Preface

Experimental efforts in trickle irrigation date back to the 1860's, but it was not until the mid-1960's, after the development and wide availability of low-cost plastic pipe and fittings, that commercial trickle irrigation became feasible. Today trickle-irrigated croplands and orchards amount to more than 800 thousand acres worldwide, including more than 100 thousand acres in the United States.

This chapter of the National Engineering Handbook describes design procedures for trickle irrigation systems. It covers logical design procedures for the major types of trickle irrigation systems in current use and contains detailed, complete sample designs. The chapter is written for engineers and experienced technicians; however, it should also be of value to others interested in the design and application of trickle irrigation systems.

Chapter 7
Trickle Irrigation

Description

Trickle irrigation is the slow application of water on or beneath the soil surface by drip, subsurface, bubbler, and spray systems. Water is applied as discrete or continuous drops, tiny streams, or miniature spray through emitters or applicators placed along a water delivery line. Water is dissipated from a pipe distribution network under low pressure in a predetermined pattern. The outlet device that emits water to the soil is called an "emitter." The shape of the emitter reduces the operating pressure in the supply line, and a small volume of water is discharged at the emission point. Water flows from the emission points through the soil by capillarity and gravity.

Types of Systems

Drip

In drip irrigation, water is applied slowly to the soil surface as discrete or continuous drops or tiny streams through small openings (fig. 7–1). Discharge rates are less than 3 gallons per hour (gph) for widely spaced individual applicators and less than 1 gph/ft for closely spaced outlets along a tube (or porous tubing).

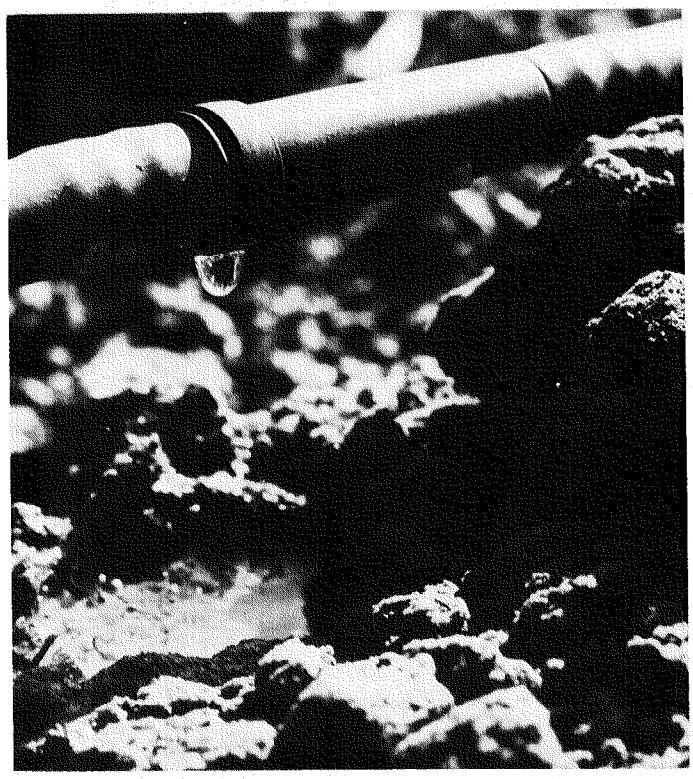

Figure 7–1.—In-line drip emitter.

Subsurface

In subsurface irrigation, water is applied slowly below the soil surface through emitters with discharge rates in the same range as those for drip irrigation. This method of application is not to be confused with subirrigation, in which the root zone is irrigated through or by water table control.

Bubbler

In bubbler irrigation, water is applied to the soil surface in a small stream or fountain from an opening with a point discharge rate greater than that for drip or subsurface irrigation but less than 1 gallon per minute (gpm). The emitter discharge rate normally exceeds the infiltration rate of the soil, and a small basin is required to control the distribution of water.

Spray

In spray irrigation, water is applied to the soil surface as a small spray or mist. The air is instrumental in distributing the water, whereas in drip, bubbler, and subsurface irrigation, the soil is primarily responsible for distributing the water. Discharge rates in spray irrigation are lower than 30 gph.

Advantages

Trickle irrigation is a convenient means of supplying each plant, such as a tree or vine, with a low-tension supply of soil moisture sufficient to meet evapotranspiration demands. A trickle irrigation system offers unique agronomic, agrotechnical, and economic advantages for efficient use of water and labor.

Water and Farm Operation Cost Savings

Trickle irrigation can reduce water loss and operating costs because only the amount of water required by the crop is applied. Labor costs for irrigating are reduced because trickle systems are equipped with automatic timing devices.

Much of the soil surface remains dry with trickle irrigation (fig. 7–2); this has two benefits. First,

Figure 7–2.—Drip system for grapes, leaving much of soil surface dry.

weed growth is reduced, so labor and chemical costs for weed control are reduced. Second, uninterrupted orchard operations are possible, and with row crops on beds, the furrows remain relatively dry and provide firm footing for farm workers.

Fertilizers and pesticides can be injected into the irrigation water to avoid the labor needed for their ground application. Several highly soluble materials are available, and new products that widen the choice are being introduced. Greater control over fertilizer placement and timing through trickle irrigation may improve fertilization efficiency.

Use of Saline Water

Frequent irrigation maintains a stable soil moisture condition that keeps salts in soil water more dilute. Thus it is possible to irrigate with water of higher salinity.

Use of Rocky Soils and Steep Slopes

Trickle irrigation systems can be designed to operate efficiently on almost any topography. Systems are operating on avocado ranches that are almost too steep to harvest (fig. 7–3). Because the water is applied close to each tree, rocky areas can be trickle irrigated effectively even when tree spacing is irregular and tree size varies.

Figure 7–3.—Drip system on slope of avocado ranch.

Disadvantages

The main disadvantages inherent in trickle irrigation systems are their comparatively high cost, proneness to clogging, tendency to build up local salinity, and, when they are improperly designed, spotty distribution pattern.

Cost

Trickle irrigation systems are expensive because of their requirements for large quantities of piping and filtration equipment to clean the water. System costs can vary considerably depending on the crop, terrain, and quantity of water available. Steep terrain may require several pressure regulators in the system. Because of spacing, some crops require less pipe than others. The degree of automation affects the cost. In general, the cost is far greater for a trickle system than for a sprinkler or flood system.

Clogging

Because the emitter outlets are very small, they can become clogged easily by mineral or organic matter particles. Clogging can reduce emission rates or upset uniformity of water distribution, and cause plant damage. In some instances, particles are not adequately removed from the irrigation water before it enters the pipe network. In others, particles may form in water as it stands in the lines or evaporates from emitter openings between irrigations. Iron oxide, calcium carbonate, algae, and microbial slimes form in irrigation systems in certain locations. Chemical treatment and proper filtration of water usually can prevent or correct emitter clogging.

Lack of Uniformity

Most trickle irrigation emitters operate at low pressures, 3 to 20 pounds per square inch (psi). If a field slopes steeply, the emitter discharge during irrigation may differ as much as 50 percent from the volume intended, and water in the lines may drain through lower emitters after the water is shut off. Some plants receive too much water; others receive too little.

Salt Accumulation

Salts tend to concentrate at the soil surface and constitute a potential hazard because light rains can move them into the root zone (fig. 7–4). When a rain of less than 2 in. falls after a period of salt accumulation, irrigation should continue on schedule to ensure that salts leach below the root zone.

During trickle irrigation, salts also concentrate below the surface at the perimeter of the soil volume wetted by each emitter (fig. 7–4). If this soil dries between irrigations, reverse movement of soil water may carry salt from the perimeter back toward the emitter. Water movement must always be away from the emitter to avoid salt damage.

Other Hazards

If uncontrolled events interrupt irrigation, crops can be damaged quickly because roots can extract nutrients and water only from the relatively small volume of soil wetted.

Rodents are known to chew polyethylene laterals. Rodent damage can be prevented by rodent control or use of polyvinyl chloride (PVC) laterals.

A main supply line can be broken, or the filtration system can malfunction and allow contaminants into the system. One filtration malfunction can result in the plugging of many emitters that then must be cleaned or replaced.

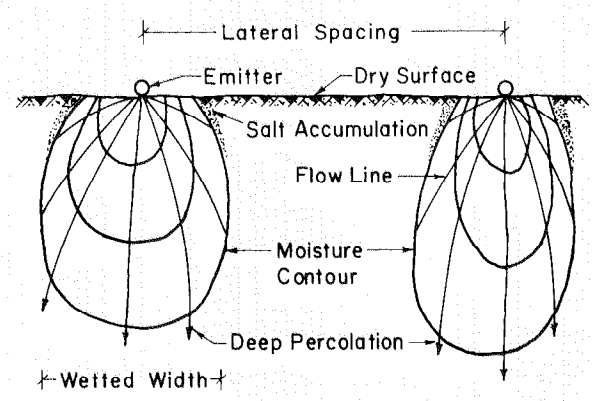

Figure 7–4.—Typical soil moisture pattern under trickle irrigation, showing salt accumulation.

Benefits Obtained and Safeguards Required with Fertilizer and Chemical Injections

Fertilizer

Very little of the fertilizer spread or broadcast over the soil surface moves into the root zone with trickle irrigation. Therefore, much of the required fertilizer, especially nitrogen, must be added directly in the water. Unfortunately, clogging problems are associated with the injection of various fertilizers into the irrigation water.

Fertilizer should always be injected over a period of 2 hr or more to maintain a reasonably uniform distribution, and it should be injected early enough in the irrigation cycle to permit flushing the system afterward.

Applying fertilizer in the irrigation water requires less labor and equipment than the conventional spreading methods. Also, conventional application of nutrients is difficult under trickle irrigation because of the small wetted volume. Slow-release fertilizer must be applied directly in the wetted area.

Many commercial fertilizers can be added during the growing season without damaging the system; thus, fertilizer levels can be maintained at an ideal level (even in sandy soils) throughout the growing season. Wetting a large percentage of the soil volume with root development throughout makes fertility management easier and takes advantage of the natural fertility of the soil.

The fertilizer program to be followed must be considered in designing a trickle system. Some types of fertilizers are not suitable for injection because of volatilization of gaseous ammonia, low water solubility, separation of the components in the mixture, leaching losses from application with excessive water, and problems with the quality of irrigation water. Therefore, the injection equipment must be designed with an understanding of the chemical composition of the fertilizer to be used. Also, the soil and water must be analyzed to determine whether the fertilizer compounds are suitable.

Following are some of the fertilizers commonly injected:

Nitrogen

Nitrogen is relatively problem free. Anhydrous ammonia (82–0–0) and aqua-ammonia (24–0–0) can be injected into irrigation water, but fertilizer efficiency is likely to be lost because of volatilization.

Another problem with ammonia injection has to do with the rise of hydroxide ion concentration in water. Ammonia increases the pH, which causes soluble calcium and magnesium to precipitate in the water and coat the inside of pipes and plug emitters. This kind of problem can be overcome by injecting a water softener ahead of the ammonia gas. The water softener complexes the calcium and magnesium and eliminates the problem, but it adds considerably to the cost of fertilization.

Most of the nitrogen salts and urea dissolve readily in water. But the nitrogen-containing fertilizers mentioned under phosphorus fertilization should not be considered highly soluble because of the interactions involving phosphorus in water and soil.

Ammonium sulfate (21–0–0) and ammonium nitrate (34–0–0) are very common fertilizer materials. In the former all the nitrogen is in the ammonium form, and in the latter about 26 percent by weight of the fertilizer is ammonium nitrogen and 8 percent is nitrate nitrogen. Urea (44–0–0) is a soluble nitrogen fertilizer. It is a neutral molecule that does not react with water to form ions. Urea and ammonium nitrate are mixed in water to give a fairly concentrated liquid mixture marketed as 30–0–0. When this mixture is injected into irrigation water, its individual components behave exactly like the dry materials dissolved and injected separately.

All of these nitrogen materials may be injected with no side effects in the water or irrigation system.

Both urea and nitrate nitrogen stay in solution in the soil and move with the soil water; therefore, these materials are highly susceptible to leaching if excessive water is applied. Ammonium nitrogen behaves quite differently. Because it is a positively charged ion, it enters into cation exchange reactions in the soil. A small change in either soluble constituent alters the relative amount of the ions in exchangeable form. In the exchangeable form, ammonium is immobile. Because cation exchange reactions are very rapid, ammonium applied in irrigation water is immobilized almost instantly on contact with soil and remains on or near the soil surface.

Ammonium applied in water readily converts to exchangeable ammonium and simultaneously generates an equivalent amount of cations in solution. In semiarid and arid regions, soils are naturally neutral to alkaline (pH 7 to 8.2), depending on how much free lime or calcium carbonate is present. In these kinds of soils, any exchangeable ammonium

that exits at the soil surface will likely volatilize. Ammonium is very sensitive to temperature and moisture. Water vaporizes very rapidly from soil after irrigation, and ammonium is especially susceptible to gaseous loss during this time.

Phosphorus

Phosphorus is difficult to apply by injection. Treble-superphosphate (TSP, 0–45–0), commonly used, is classified as water soluble but is only moderately so. Actual dissolution of TSP in water is limited because the monocalcium phosphate of TSP changes to dicalcium phosphate, which is insoluble in water. Therefore, treble-superphosphate is not suitable for injection.

Several kinds of ammonium phosphate are soluble in water. Ammonium phosphate sulfate (16–20–0), monoammonium phosphate (11–48–0), and diammonium phosphate (16–46–0) are suitable for injection when nitrogen and phosphorus are needed. Phosphoric acid is another form of soluble phosphorus.

The quality of the irrigation water must be considered before injecting phosphorus into a trickle irrigation system. If the irrigation water has a pH above 7.5 and a high calcium content, the injected phosphorus will precipitate as dicalcium phosphate, which can plug emitters and restrict flow in the pipeline network. In this situation, phosphoric acid must be used to meet phosphate needs. Flushing the system with a solution of either sulfuric or hydrochloric acid immediately after applying the phosphoric acid prevents clogging.

Organic phosphate compounds such as glycerophosphoric acid can be injected through trickle irrigation systems without fear of precipitation in the system. The organic compounds are comparable to urea in terms of their behavior in soils, but they are relatively expensive compared with the soluble forms of inorganic phosphorus, which are themselves relatively expensive compared with TSP. Phosphorus is immobile in soil because it becomes insoluble almost as soon as it contacts calcium in the soil. Therefore, phosphate applied by spray irrigation collects at the soil surface and is unavailable to the crop. Subsequent crops will be benefited, however, because the next plowing will mix the fertilizer throughout the plowed layer. Phosphorus applied by drip irrigation is concentrated at the application points; however, phosphate moves in the soil enough to reach the root zone.

Potassium

Potassium is easy to inject through a trickle irrigation system. Potassium oxide (the most common source) is very soluble. The fertilizer moves freely into the soil and is not readily leached away.

Trace Elements

The trace elements—magnesium, zinc, boron, iron, copper, etc.—also can be applied through a trickle irrigation system. Application rates must be based on analysis of soil and water because trace elements applied in excessive quantities can react with salts in the water and be toxic to plants.

If complete details for injecting trace elements into a trickle system have not been field checked, it is better to use conventional application methods, including foliar sprays or mechanical application and incorporation into the soil.

Chemicals to Control Precipitates and Organic Deposits

Precipitates can form inside the pipes and emitters from dissolved minerals that come out of solution if the pH or temperature changes. They are not the same as the mineral deposits that are left by evaporation and build up on the outside of emitters. These latter deposits usually are not a problem except possibly at the ends of exit tubes and valve faces. Clogging of emitters by precipitates and organic deposits cannot be prevented by filtration; chemicals must be injected into the system to control them.

Calcium and Iron

Calcium and iron precipitates are a potential problem with most well water. An analysis of well water will indicate whether the bicarbonate or iron concentration is high enough to be a problem. From general observations, a bicarbonate level higher than 2.0 milliequivalents per liter (meq/L) coupled with a pH above 7.5 indicates a potential problem.

Algae and Slime

Algae are microscopic plants that produce their own food through the conversion of light energy and nutrients. Algae are common in most surface water supplies. Because most algae need light to grow, growth inside the system by small algal particles

that pass through the filter can be deterred by use of black emitters and black pipe above ground. In the dark, bacteria break down the algal particles, which are then expelled through the emitters along with suspended silt and clay.

Slime is a generic term for the growth of long-filament microorganisms, primarily bacteria. These microorganisms do not produce their own food and do not require sunlight for growth. The more common are airborne; therefore, open systems are most susceptible.

Iron Bacteria

Iron is present in water in the soluble (ferrous) form. In the presence of oxygen, it is oxidized to the insoluble ferric form, a reddish-brown precipitate. Iron bacteria can produce enough slime to plug emitters if the water supply has an iron concentration of 0.3 parts per million (ppm) or greater and the pH is between 4.0 and 8.5.

Treatment for Precipitates, Algae, and Slime

Various types of chemicals can be injected into trickle irrigation systems to control calcium and iron precipitates and organic deposits.

Acid is the best treatment for bicarbonates resulting from calcium precipitation. The least expensive acid should be chosen and used at a concentration that will offset the excess bicarbonates. The amount of acid required and the optimum pH are functions of the irrigation water, equipment, composition of the precipitate, temperature, and type and concentration of the acid. An acid concentration that maintains a pH of 5.5 to 7.0 will control precipitates. The periodic injection of an acid treatment should reduce the cost of controlling bicarbonates. Another way to reduce this cost is to aerate the irrigation water and keep it in a reservoir until equilibrium is reached and the precipitates have settled out.

Sodium hypochlorite should be used to treat hard ground-water supplies. Treatment with calcium hypochlorite causes calcium to precipitate.

Iron precipitation at the emitter can be prevented by deliberately precipitating the iron and filtering it out before it enters the pipe network. A chemical feeder can be set to provide a measured amount of chlorine solution to oxidize the iron and other organic compounds present and to allow a chlorine residue, for example 1 ppm.

Chelating the iron with a phosphate chelating agent at two to five times the concentration of the iron molecules should eliminate the problem. If concentrations are as high as 10 ppm, however, aeration by a mechanical aerator and settling in a reservoir may be more practical. Mechanical injection of air into the water supply followed by filtration is another method of removing iron.

Oxidation and reduction reactions are the usual means of cleaning iron bacteria from trickle systems. Normally, the system is superchlorinated (i.e., rate of at least 10 ppm) to oxidize the organic material and clear the irrigation system. Continuous injection of chlorine, however, is believed to be the best method of combating iron bacteria.

Both algae and slime can be controlled by chlorination, which is inexpensive, efficient, and effective. Typical recommended chlorine dosages are as follows:

1. For algae use 0.5 to 1.0 ppm continuously or 20 ppm for 20 min in each irrigation cycle.
2. For iron bacteria use 1 ppm more than the parts per million of iron present. (This can vary depending on the amount of bacteria to control.)
3. For iron precipitation use 0.64 × the ferrous ion content.
4. For manganese precipitation use 1.3 × the manganese content.
5. For slime maintain 1 ppm free residual chlorine at ends of laterals.

The efficiency of chlorine treatment is related to the pH of the water to be treated: the higher the pH, the more chlorine required. In treating severe cases of algae and slime, an algae detention/destruction chamber is used; it usually consists of a large pond or concrete chamber to retain the chlorine-treated irrigation water long enough to destroy the algae and slime.

System Components

A trickle irrigation system consists of the control head, main and submain lines, manifold, laterals, emitters, flow controls, and flow/pressure regulators (fig. 7–5).

Control Head

The control head includes the pumping station, water-measuring devices, fertilizer and chemical injection equipment, valves, and filtering equipment.

Pumping Station

The pumping station consists of the power unit (internal combustion engine or electric motor) and a centrifugal, deep-well, or submersible pump and appurtenances. In the design and selection of pumping equipment for a trickle irrigation system, high efficiency is the principal requirement.

Water-Measuring Devices

A key requirement of operating a trickle system is knowing how much water is being supplied. In-line flowmeters may register total flow in standard volumetric units: gallons, cubic feet, acre-feet, miner's inch-days, or others. Some flowmeters turn off automatically when a certain amount of water has been applied.

Fertilizer and Chemical Injection Equipment

Injectors may be used to apply fertilizer or other chemicals directly into the trickle irrigation system. Methods of injection are:

Suction.—Suction of chemicals through the intake side of a pump is a simple injection method; however, corrosive materials may cause excessive wear on pump parts. Furthermore, it is difficult to monitor accurately the rate of input as the chemical level in the supply tank lowers.

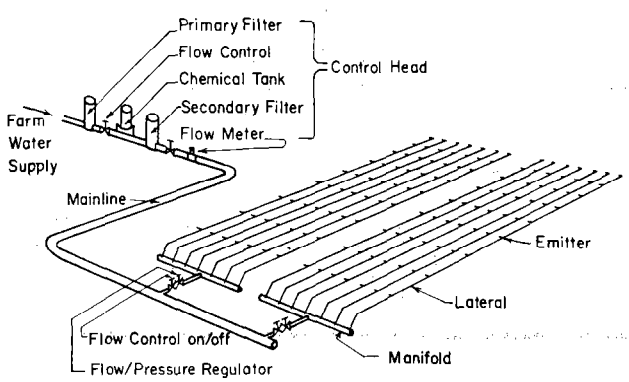

Figure 7–5.—Basic components of a trickle irrigation system.

Pumping.—Pumping is the most versatile method for injecting chemicals into trickle irrigation systems. Positive-displacement piston pumps can be designed and calibrated to give an accurate low or high injection rate, but they must be properly maintained. The pump draws the fertilizer solution from an open tank and injects it by positive displacement into the irrigation line. Water-driven fertilizer pumps use the pressurized water from the irrigation line to drive the pump by means of diaphragms or pistons that have a larger surface area than the injection piston. Thus, the pump injects chemicals at a higher pressure than the pressure of the water that drives it. The small amount of water that drives the pump (two to three times the volume of fertilizer injected) is expelled.

On engine-driven pumping plants, the fertilizer injector pump can be driven by a belt-and-pulley arrangement. On electric installations, the fertilizer pump can be driven with a fractional-horsepower electric motor. Both engine- and electric-driven pumps are usually less expensive and have fewer moving parts to be maintained than water-driven pumps. Automatic volumetric shutoff valves are available for water-driven pumps and automatic time controllers are available for electric-driven pumps. Injection can be stopped by letting the chemical tank run dry, but this practice may damage the injector pump unless it is shut off.

Differential pressure.—Differential pressure also can be used to inject chemicals into the irrigation water. In a differential pressure system, the chemical tank is under the same pressure as the main line. Venturi pipe sections can be used to create a significant pressure loss. The Venturi effect is obtained by narrowing the inlet pipe diameter and then gradually expanding it back to the inlet diameter size. The Venturi throat pressure is lower than the pipeline pressure because of the higher velocity through the throat. Most of the pressure is regained in the expansion section, however, which makes the Venturi tube a very efficient differential pressure device. Figure 7–6 shows the components of a Venturi-tube-type pressure-differential injection system.

Pressure-differential injection systems have no moving parts, require no external power source, and are less expensive than pump injectors. Their main

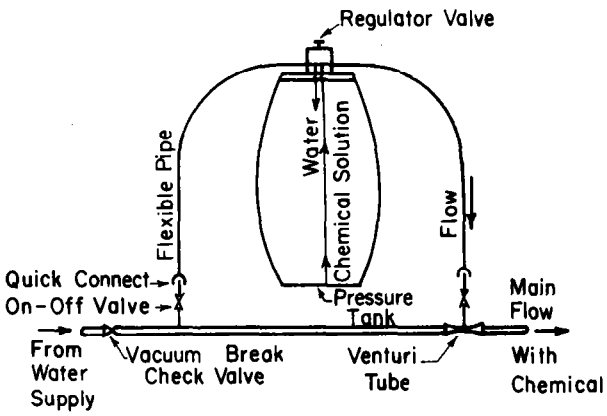

Figure 7-6.—Pressure-differential injection system.

disadvantage is that the chemical solution to be injected must be contained in a tank at the same pressure as that in the main line (instead of in a lightweight tank open to the atmosphere). Because large, noncorrosive, high-pressure tanks are expensive, small tanks are usually used, even though more labor is required for more frequent servicing.

Valves

Valving needed at the head depends upon the method of operating the trickle irrigation system. Figure 7-7 shows valving for a system with fertilizer and chemical injection, control valves, and safety controls.

The components shown are:

(1) Start valve
(2) Automatic valve (operating according to the volume of discharge)
(3) Nonreturn valve
(4) Air valve
(5) Connections to and from the fertilizer tank
(6) Valve for regulating the nutrient solution flow
(7) Filter
(8) Pressure gage
(9) Connection for measuring pressure behind the filter
(10) Fertilizer tank

Sediment Removal

Filtering to remove from the water debris that might clog or otherwise foul the emitters or sprayers is essential on most systems. Central filtration enables more convenient and efficient control of water cleanliness than does filtration at small segments of the system.

The type of filter needed depends on the contaminant. Contaminants can be classified into two general groups, physical and chemical. The physical contaminants are suspended solids including organic and inorganic components. Algae, bacteria, diatoms, larvae, fish, snails, and seeds and other plant parts are the major organic contaminants. The inorganic

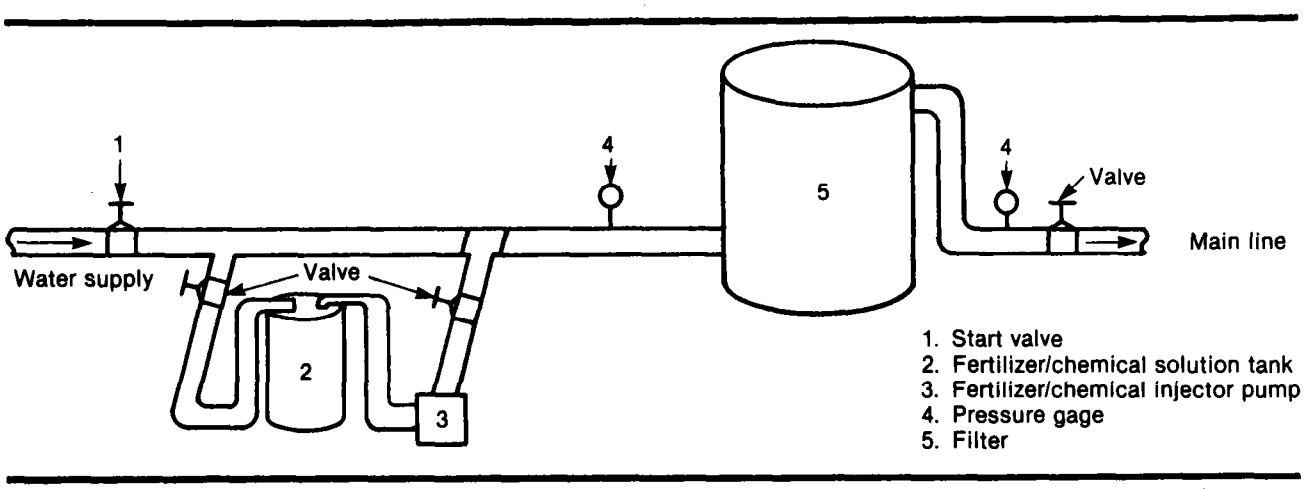

Figure 7-7.—Valves at the head of a trickle irrigation system.

contaminants are mainly in the basic range of soil particles. The chemical contaminants are solutes that precipitate and become potential blocking agents. They are also sources of food for slime bacteria that can cause pipe and emitter clogging.

Evaporation may leave the dissolved solids on the outside of emitters to cause plugging if the opening is not protected by the equipment design or installation method. Furthermore, precipitates and slimes can restrict flow and eventually block the distribution pipe, tubing, and emitters. Removing unwanted chemicals requires processes such as reverse osmosis or ion exchange, which is generally not economically feasible. But injecting certain chemicals into the irrigation water to neutralize the adverse effects of unwanted chemicals has proved economical.

Consistency of the water quality must be considered, and filtration and treatment must be planned for the average worst condition. Open water such as lakes, ponds, rivers, streams, and canals can vary widely in quality and often contains large amounts of organic matter and silt. Warm weather, light, and slow-moving or still water favor rapid algal growth. Open waters often require use of a prefilter, such as a settling basin or vortex separator, followed by a sand filter and then a screen filter. In some instances chemical coagulants are required to control silt and chlorine is needed to control algae.

Municipal or domestic water comes from various sources, such as reservoirs and wells, and undergoes various levels of treatment. Wells usually have good-quality water, but they can deliver small to large quantities of sand. The water may also be chemically unstable and produce chemical precipitates in the pipes and emitters.

Adequate filtration requires processing all the water entering the system. The particle size of the contaminants that can be tolerated depends on the emitter construction and should be indicated by the manufacturer or known from local experience. Removal of particles 10 or more times smaller than the emitter opening is recommended because several particles may group together and bridge the emitter openings. This behavior is typical for organic particles having about the same density as water. Also, inorganic particles heavier than water, such as fine and very fine sands, tend to settle out and deposit in the slow-flow section of pipe near the ends of laterals and when the system is turned off. Fine sand particles also tend to settle along the inside of laminar-flow emitters in which the flow rate is zero along the walls even during operation. The resulting clogging may not be rapid, but it is inevitable.

Filtering equipment.—Screen filters, if adaptable, are the simplest, least expensive, and most efficient means for filtering water. Gravel and graded sand filters consist of fine gravel and sand of selected sizes placed inside a cylindrical tank to filter out heavy loads of very fine sand and organic matter. Vortex sand separators depend on centrifugal force to remove and eject high-density particles from the water. Although vortex devices do not remove organic materials, they are efficient for ejecting large quantities of very fine sand or larger inorganic solids before their further infiltration through screens.

Settling pools.—Settling basins, ponds, or reservoirs can be used to remove large volumes of sand and silt. However, sedimentation alone will not provide the desired water quality. In fact, algal growth and windblown contaminants in the pool may cause more filtration problems than sediment. Therefore, open water areas should be avoided if possible, particularly if the water supply is from a well. After the water is drawn from the pool, it must be chemically treated and filtered through various combinations of filters and screens.

For settling pools to be effective, the intake to the trickle system should be located so that water from the upper level of the pool enters the system. The pool should be sized to limit turbulence and permit a minimum of 15 min for water to travel from the pool inlet to the system intake. A minimum of 15 min is required for most inorganic particles larger than 80 microns (about #200 sieve) to settle. Where possible, the pool should be long and narrow. If construction area is limited, baffles or U-shape construction will be needed. Example: To provide settle time for a 2-ft^3/s flow, a pool should be 45 ft long, 10 ft wide, and 4 ft deep. Control of vegetation and algal growth in the pool may require lining the sides and bottom of the pool to control vegetation and frequent chemical treatment to control algae.

Screen filters.—In screen filters, the hole size and the total amount of open area determine the efficiency and operational limits.

The basic parts of a screen filter are the filter screen and basket. The screen is stainless steel, nylon, or polyester mesh. Moderate amounts of algae tend to block the screen quickly unless the screen filter is specifically designed to accommodate an organic contaminant.

A blow-down filter uses either stainless steel mesh, which offers relative strength, or nylon mesh arranged so that water can be flushed over the surface without disassembling the filter. Nylon mesh has the advantage of fluttering during a flushing cycle, so that the collected material is broken up and expelled. A back-flushing filter allows the flow of water through the screen to be reversed; the collected particles are taken with the water. Gravity-flow filters function by running the water onto a large mesh screen, letting gravity pull it through, and then picking it up with a pump and delivering it to the distribution points. Some gravity-flow filters have sweeping spray devices under the screen to lift the contaminants and move them to one side and away.

A screen filter should be cleaned when the pressure head loss is about 3 to 5 psi or at a fixed time determined in advance. The most common methods of cleaning are (1) manual cleaning, i.e., pulling out the filter basket and cleaning it by washing; (2) cleaning by repeated washing, i.e., washing the filter basket by backflushing or otherwise washing (blowing off) the basket without dismantling the filter; and (3) automatic cleaning, which takes place during the filter operation continuously, on a time schedule, or whenever the pressure loss across the filter reaches a certain level.

Regardless of the cleaning method, extreme caution should be taken to prevent dirt from bypassing the filter during cleaning. Backflushing with precleaned water is recommended. Downstream filters, such as a small filter or hose washer screen at each lateral connection, provide an additional factor of safety. Extreme caution in keeping large dirt particles out of the system is necessary and is especially important during accidents such as main-line breaks. A small amount of sand or organic particles large enough to clog the tricklers could ruin them.

The head loss in a clean filter normally ranges between 2 and 5 psi, depending on the valving, filter size, percentage of open area in the screen (sum of the holes), and discharge. In designing the system, the anticipated head loss between the inlet and outlet of the filter just before cleaning should be taken into consideration. This total head loss ranges between 5 and 10 psi.

A screen filter can handle a wide range of discharges, but a filter with a high discharge in relation to its screen area requires frequent cleaning and may have a short life. When estimating the appropriate discharge for a given screen filter, consider the quality of water, filtration area and percentage of open area, desired volume of water between cleaning cycles, and allowable pressure drop in the filter surface.

Typical maximum recommended flow rates for fine screens are less than 200 gpm/ft^2 of screen open area. The wire or nylon mesh takes up much of the screen area. For example, a standard 200-mesh stainless steel screen has only 58 percent open area. An equivalent nylon mesh with the same size openings has only 24 percent open area. Therefore, ideal flow rates should range from 40 to 100 gpm/ft^2 of total screen area, depending on the percentage of open area.

Sand media filters.—Graded sand filters consist of fine gravel and sand of selected sizes inside a cylindrical tank. As the water passes through the tank, the gravel and sand filter out heavy loads of very fine sands and organic material. Gravel filters are often constructed so that they can be backwashed automatically as needed. A recommended practice is to use a screen filter downstream from the gravel filter unless the gravel filter has its own backup screen device to pick up any particles that might escape during backwashing.

Sand media filters are most effective for organic material, because they can collect large quantities of such contaminants before backwashing is necessary. Also, if the predominant contaminant is long and narrow, such as some algae or diatoms, the particle is more likely to be caught in the multilayered sand bed than on a single screen surface.

Factors that affect the characteristics and performance of sand filters are water quality, types and size of sand media, flow rate, and allowable pressure drop. Although they are more expensive than comparable screen filters, sand filters can handle larger loads with less frequent backflushing and a smaller pressure drop. Sand filters are recommended when a screen filter would require frequent cleaning or when particles to be removed are smaller than the 200-mesh opening.

The sand media used in most trickle-irrigation-system filters are designated by numbers. Numbers 8 and 11 are crushed granite, and numbers 16, 20, and 30 are silica sands. The mean granule size is about 1,900, 1,000, 825, 550, and 340 microns for numbers 8, 11, 16, 20, and 30, respectively.

At a flow velocity of 25 gpm/ft^2 through the sand bed, numbers 8 and 11 crushed granite remove

most particles larger than one-twelfth of the mean granule size or larger than about 160 and 80 microns, respectively. The sand numbers 16, 20, and 30 remove particles larger than about one-fifteenth the mean granule size or larger than about 60, 40, and 20 microns, respectively.

It is common practice to select the smallest medium possible for a given installation; however, a larger medium may sometimes be desirable. The larger medium generally causes less pressure drop and has a slower buildup of particles. In many gravity systems, the pressure drop is critical, and the larger medium not only has a lower pressure drop when clean, but also needs less frequent flushing for a given allowable increase in pressure drop.

Typically, the initial pressure drop across numbers 8, 10, and 16 media is between 2 and 3 psi, and for numbers 20 and 30 media it is about 5 psi. The rate of pressure drop increase tends to be linear with time. The relative rates of pressure drop increase, based on an arbitrary 1 unit of pressure drop per unit of time for number 11 medium are: 0.2 for number 8, 2 for number 16, 8 for number 20, and 15 for number 30. For example, if it takes 15 hr for the pressure drop to increase by 5 psi across a number 11 medium, the same water would be expected to cause a 5-psi increase in about 2 hr across a number 20 medium.

In practice, the maximum recommended pressure drop across a sand filter is generally about 10 psi. Backflushing must be frequent enough to hold the pressure drop within the prescribed design limits. If backflushing is required more than twice daily, automatic backflushing is recommended. Automatic backflushing can be activated by a timer or by a switch that senses the pressure differential across the medium.

Backflushing flow rates vary with the size of the medium and the construction of the filter. Typical required backflushing flow rates for free-flow filters range from 10 to 15 gpm/ft² of bed for numbers 30 and 20 media and between 20 and 25 gpm/ft² of bed for numbers 16 and 11 media.

The flow rate across the medium is an important consideration in filter selection. Present-day high-rate filter technology is based on a nominal value of 20 gpm/ft² of bed; this value has been established relative to a given bed composition and filter use. For trickle irrigation, however, the level of filtration required may be such that rates about 30 gpm/ft² may be allowed.

Figure 7–8 shows the effect of flow rate on the maximum particle size passing through a typical filter with media of various sizes. For a given quality of water and size of filter medium, the size of particles passing through increases with the flow rate.

Vortex sand separators.—Modern vortex (centrifugal) sand separators can remove up to 98 percent of the sand particles that would be removed by a 200-mesh screen. The vortex separators depend on centrifugal force to remove and eject high-density particles from the water. They cannot remove organic materials.

Although vortex separators do not remove all the required particles, they are efficient for ejecting large quantities of very fine sand, such as that from a well that is bringing up sand. The separator should always be backed by a screen filter downstream to catch contaminants that may pass through, especially during startup and shutdown.

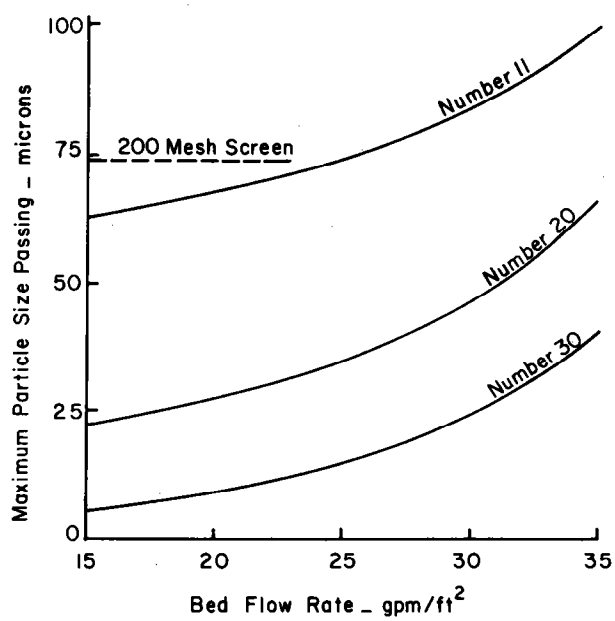

Figure 7–8.—Effect of flow rate on the maximum particle size passing through a typical free-flow sand filter with media of various sizes.

Main and Submain Lines

The main and submain lines carry water from the control head to the manifold or directly to the lateral lines. The basic system subunit includes the manifold with attached laterals. Pressure control or adjustment points are provided at the inlets to the manifold. Because of these pressure-control-point locations, pipe size selection for the main and submain lines is not affected by the pressure variation allowed for the subunit. Therefore, the pipe size should be selected based primarily on the economic tradeoff between power costs and pipe installation costs. Design and installation of the main and submain lines should be in accordance with the *National Handbook of Conservation Practices.*[1]

As with other irrigation pipelines, the flow velocity, check valves, air and vacuum relief valves, and pressure relief valves must be considered and incorporated as part of the system. A means of flushing and draining the pipelines also should be incorporated into the main line and submain system.

Manifolds

The manifold, or header, connects the main line to the laterals. It may be on the surface, but usually it is buried.

The limit for manifold pressure loss depends on the topography, pressure loss in laterals, and total pressure variation allowed for the emitter chosen. Once these limits have been established, standard calculations for hydraulic pipelines with multiple outlets may be used.

On flat terrain, the connection from submain or main line to manifold is in the center of the manifold. If there is any appreciable slope, the downhill elevation gain can be balanced by reducing the pipe size or by moving the connection point uphill to increase the number of laterals served downhill. Typically, a combination of both means is used to balance the downhill elevation gain. An uphill pressure loss can be balanced by reducing the number of uphill laterals served, increasing the size of the manifold piping, or both.

Frequently, the manifold connection to the main line is the point at which in-field pressure is regulated. It is also the point at which flow control can be automated; valves or other devices can turn the water to this subunit on and off. On steep fields, one pressure-regulating point cannot serve more than one lateral; in such cases, several pressure- or flow-regulating points may be needed. One regulating point may serve two to five laterals (fig. 7–9) or one may be required at each lateral.

Laterals

In trickle irrigation systems, the lateral lines are the pipes on which the emitters are attached. Water flows from the manifold into the laterals, which are usually made of plastic tubing ranging from 3/8 to 1 in. in diameter. Continuous-size tubing provides better flushing.

The layout of lateral lines should be such that it provides the required emission points for the crop to be irrigated. Sometimes two laterals per row of trees are needed. Other methods of obtaining more emission points per tree are zigzag and "snake" layouts and use of pigtail lines looped around or between the trees. The use of "spaghetti" tubing to provide multioutlet emission points is another way to distribute water. Figure 7–10 shows various lateral layouts for widely spaced permanent crops.

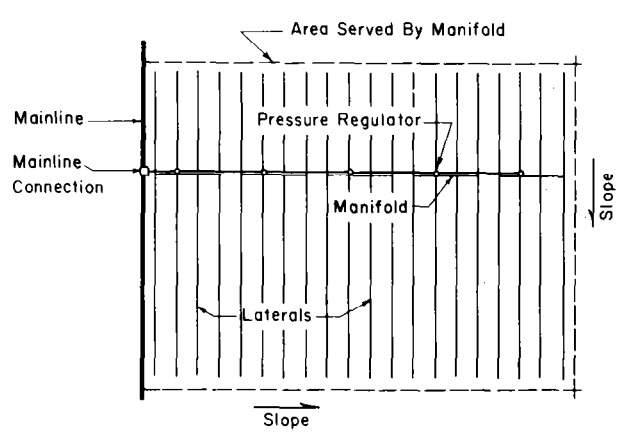

Figure 7–9.—Manifold layout showing inlet connection uphill from center and showing pressure-regulated manifolds.

[1]Soil Conservation Service. 1977–80. National Handbook of Conservation Practices. U.S. Dep. Agric. Unnumbered.

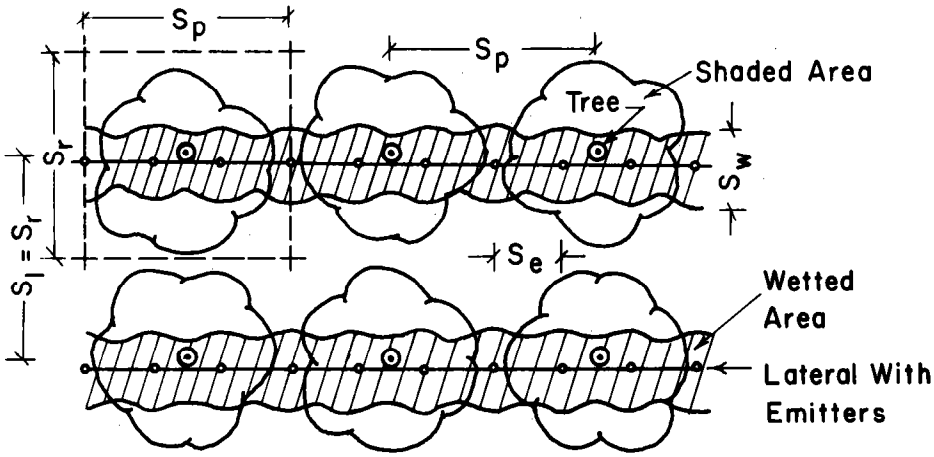

A. Single lateral for each tree row. S_p = plant spacing; S_r = row spacing; S_w = width of wetted strip; S_e = emitter spacing; S_l = lateral spacing.

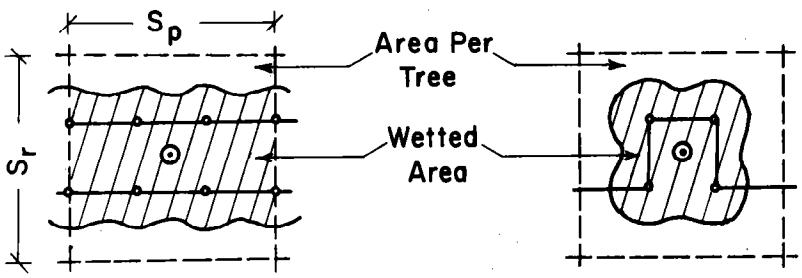

B. Double laterals for each tree row.

C. Zigzag lateral for each tree row.

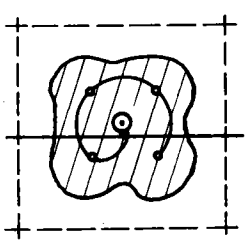

D. Pigtail with four emitters per tree.

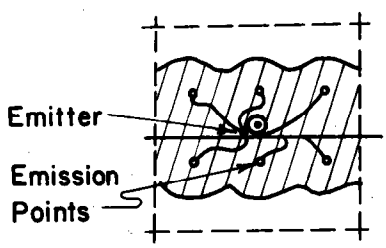

E. Multiexit six-outlet emitter with distribution tubing.

Figure 7-10.—Various lateral layouts for a widely spaced permanent crop.

Definitions of terms used in figure 7–10 are as follows:

P_s = percent area shaded—the average horizontal area shaded at midday by the crop canopy as a percentage of the total crop area.

P_w = percent area wetted—the average horizontal area wetted in the top part of the crop root zone as a percentage of the total crop area.

S_e = emitter spacing—the spacing between emitters or emission points along a lateral, feet.

S_l = lateral spacing, feet.

S_p = plant spacing in the row, feet.

S_r = row spacing, feet.

S_w = width of the wetted strip, feet.

Emitters

In drip, subsurface, or bubbler irrigation, emitters are used to dissipate pressure and discharge water. An emitter permits a small uniform flow or trickle of water at a constant discharge that does not vary significantly with minor differences in pressure head. Ideally, emitters should have either a relatively large flow cross section or some means of flushing to reduce clogging. Emitters should be both inexpensive and compact.

The point on or beneath the ground at which water is discharged from an emitter is called the emission point. Trickle irrigation with water discharged from emission points that are individually and widely spaced—usually more than 3 ft—is called point-source application.

Because of various conditions affecting trickle irrigation, an assortment of emitters has been developed. To dissipate pressure, long-path emitters use a long capillary-size tube or channel, orifice emitters use a series of openings, and vortex emitters use a vortex effect. Flushing emitters use a flushing flow of water to clear the discharge opening each time the system is operated. Continuous-flushing emitters continuously permit the passage of large solid particles while discharging a trickle or drip flow. This type of emitter can reduce filtering requirements. Compensating emitters discharge water at a constant rate over a wide range of lateral line pressures. Multioutlet emitters supply water to two or more points through small-diameter auxiliary tubing. Figures 7–11 through 7–16 show construction and characteristics of emitters.

Emitters are located at predetermined spacing on the lateral and are connected by various means (fig. 7–17).

Other types of water applicators used in trickle irrigation are line-source tubing and sprayers. Trickle irrigation with water discharged from closely spaced perforations or a porous wall along the lateral line is called line-source application.

Three types of line-source tubing are used in line-source application. Single-chamber tubing is a small-diameter hose with punched openings spaced 2 ft or less apart. Double-chamber tubing is a small-diameter hose with a main and an auxiliary bore separated by a single wall. The double-chamber tubing has widely spaced inner openings punched in the separator wall between the main and auxiliary bores. For each inner opening, three to six exit holes are punched at 0.5- to 2-ft intervals in the outer wall of the auxiliary bore. Porous-wall tubing is a small-diameter hose with a uniformly porous wall. The pores are of capillary size and ooze water when under pressure.

Aerosol emitters, foggers, spitters, misters, or miniature sprinklers are used in spray irrigation. These devices dissipate pressure and discharge a small uniform spray of water to cover an area of 10 to 100 ft^2. Sprayers should have a low water trajectory and a single large flow cross section, and should apply the water evenly.

Flow Controls and Pressure Regulators

Because trickle irrigation is used to obtain high irrigation efficiencies, flow- and pressure-control devices are an integral part of the system. Flow and pressure must be controlled during each phase of the irrigation—namely, setting and operation of the equipment, water application, and water distribution—by hand-operated pressure controls and on-off valves, sequential operation, or partial or full automation. Each of the methods requires a cycling process. Table 7–1 shows the characteristics of various cycling methods.

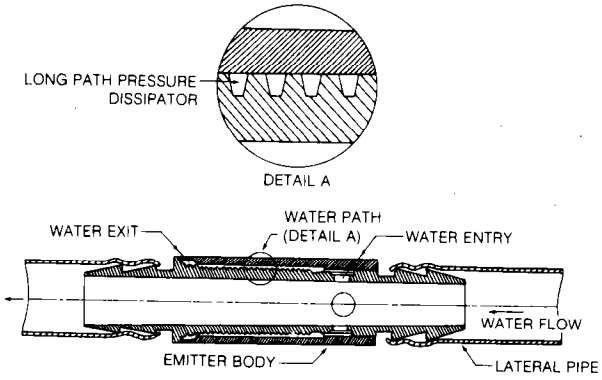

Figure 7–11.—Single-exit long-path emitter.

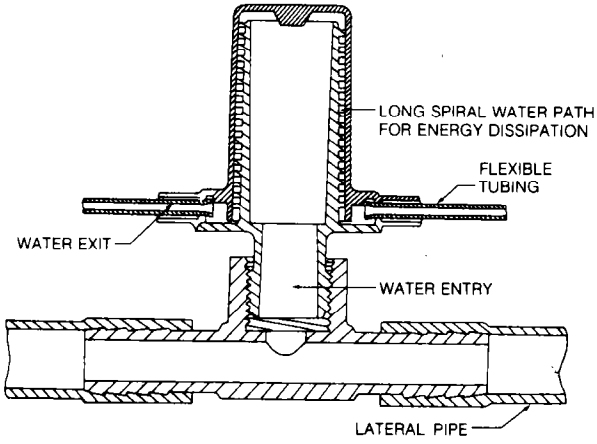

Figure 7–12.—Multiexit long-path emitter.

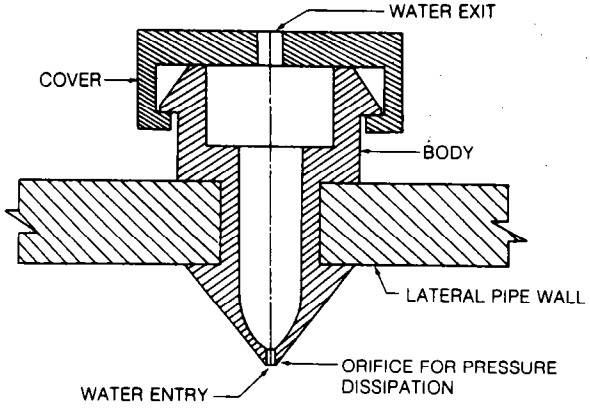

Figure 7–13.—Single-exit orifice-type emitter.

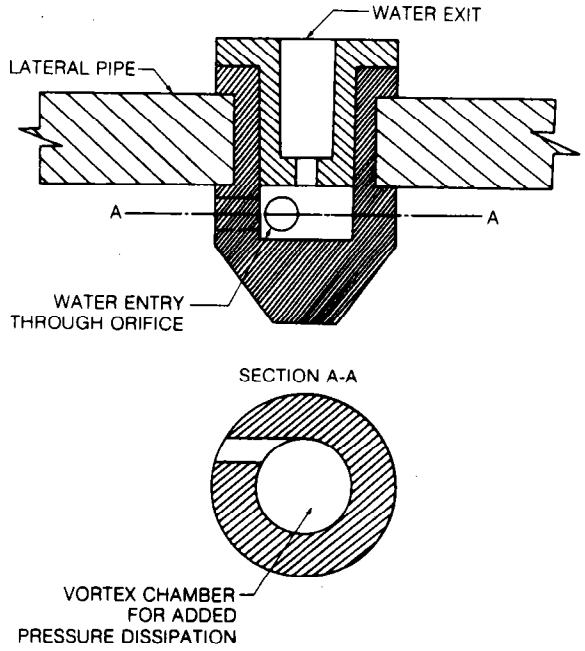

Figure 7–14.—Orifice-vortex-type emitter.

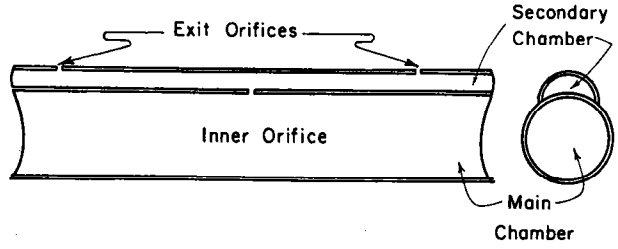

Figure 7–15.—Twin-wall emitter lateral.

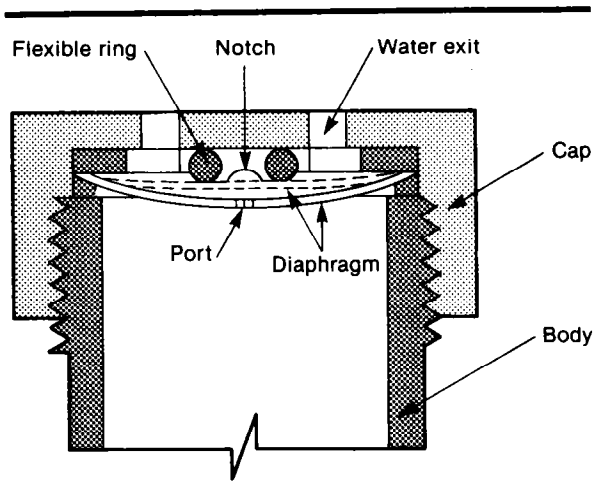

Note: diaphragm is shown in relaxed position—dotted line shows diaphragm in operating position

Figure 7-16.—Flushing-type emitter.

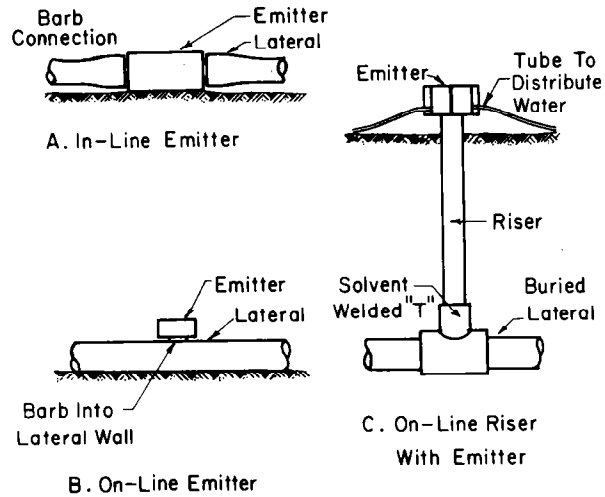

Figure 7-17.—Typical means for connecting emitters to laterals.

Table 7-1.—Cycling method characteristics of a trickle irrigation system

Cycling method	Beginning of irrigation cycle	Basis for closing valve	Manner of opening next valve	Order of valve operation	To change irrigation depth	To change the order of operation
Hand valve	Manual opening	Time	Manual	Without restrictions	Change on-time or pressure	Without limitations
Volumetric valve	Manual opening	Quantity of water	Manual	Without restrictions	Manually adjust valve	Without limitations
Sequential operation with volumetric valve	Manual opening	Quantity of water	Hydraulic control	Adjoining areas; from low to high areas	Manually adjust valve	Possible only by relocating the control lines
Full automation by time or volume	Automatic, planned in advance	Time or volume	Hydraulic or electric control lines	Without restrictions	Adjust time or volume	Resetting at the control board
Full automation by soil moisture	Automatic, according to soil moisture	Soil moisture level	Automatic; independent of other valves	Order in which soil dries	Adjust soil moisture sensors	Without any prescribed order

Hand-Operated Pressure Controls and On-Off Valves

The flow rate is controlled by adjusting the pressure with manual valves set to balance flow rates among the subunits of the system. It is important to check and adjust the valves to keep emitter discharges uniform.

Another method of flow control is the use of pressure or flow regulators at the inlet to each lateral or header feeding a small group of laterals. These valves are usually preset for a given pressure or flow rate and often cannot be adjusted or reset. These valves must be incorporated into the system design and not installed as an afterthought, because only a limited selection of pressures or flow rates is available with the small, low-cost valves.

Jumper tubes of various diameters and lengths can be used to connect each lateral to the manifold. The tubes can be cut to the length that provides the pressure loss required to produce uniform lateral inlet pressures along a manifold with nonuniform pressures. In effect, the jumper tubes serve as fixed precision fluid resistors, and the uniformity of pressure that can be achieved is limited only by practical design and installation considerations.

Sequential Operation

Parts of the system can be operated sequentially with volumetric control valves that are interconnected by hydraulic control lines. As each valve closes, the next valve opens. When the sequencing operation is completed, the valves must be readjusted, and the first valve must be activated manually to start the cycle again. It is also desirable (essential in steep areas) to plan the irrigation so that valve activation proceeds from lower to higher plots.

Partial Automation

Volume control is well suited to trickle irrigation. Volume can be controlled most simply with some automation by use of volumetric or mechanical timeclock valves. Semiautomatic volumetric control valves can be placed at the head of each subunit, or a single such valve can be used at the control head along with ordinary valves controlling each subunit. The volumetric valve requires manual opening and adjustment, but it closes automatically. The use of volumetric valves does not dictate a special operating sequence. Because the amount of water applied is measured, precise pressure control is not required at the inlets to volumetric valves. Pressure control is required if mechanical timeclock valves are used.

Full Automation

Operation can be fully automated either by using a central controller operated on a time or volume basis or by soil-moisture sensing.

Automation on a time or volume basis requires a control system operating either hydraulic or electric valves. The controller automates the irrigation for an unlimited number of cycles. The order in which the valves operate can be altered from one cycle to the next. Both the operating time of each valve and the quantity of water distributed can be changed easily at the control panel. Rather than using a fixed-cycle interval for the system, the cycle of each irrigation can be started by a sensor in a National Weather Service class "A" evaporation pan or its equivalent, or by weather instruments.

Soil moisture sensors in the plant root zone can be used to activate the controller to open and close the valves. It is customary to use a tensiometer as the moisture sensor. The tensiometer measures the soil moisture tension and signals the valve controlling each subunit, and the valve opens or closes. Because each valve operates automatically and is not connected to any other valve, the order of operation is not dictated in advance. Therefore, the circuitry must pass through some type of control panel to eliminate the simultaneous opening of more than the desired number of valves. Trickle systems automatically controlled by soil moisture are not in wide use because of the technical problems associated with the uneven distribution of microlevel moisture.

Operation and Maintenance

The manner of operating and maintaining all components determines the success or failure of any trickle irrigation system.

Operating a trickle system involves the following steps for the owner-operator:

1. Acquiring complete information and instructions from the designer and dealer.
2. Determining when and how long to irrigate.
3. Checking the water meter readings and recording the figures.
4. Accurately setting the hydraulic metering valve.
5. Operating the head valve to begin irrigation.
6. Checking the system along all components for proper operation, beginning with pressure readings at the header.
7. Checking the emitters, at least on a random basis.
8. Setting the chemical and fertilizer injection equipment.

Reliable performance of a trickle system depends on preventive maintenance that includes proper filtration, pipe flushing, and field checks of mechanical devices.

The various methods of cleaning filters are discussed earlier in this chapter. Normally the filter is designed with 20 to 30 percent extra capacity. Unless the filter has an automatic backflushing system, it must be hand cleaned daily during the irrigation.

After construction or repairs, the system should be flushed systematically, beginning with the main line and proceeding to the submains, manifolds, and laterals. The main lines and then the submains should be flushed one at a time with the manifold or riser valves turned off. Closing the valves on all lines except the one being flushed allows a large flow of water. The manifolds should be flushed with all the lateral riser valves turned off. Finally, the lateral hoses should be connected and flushed for about an hour on each operating station.

Fine sand, silt, and clay tend to settle in the low-velocity section of the system, at the ends of manifolds and laterals. Emitters receiving high concentrations of these fine contaminants are susceptible to clogging; therefore, periodic flushing is a recommended part of a good maintenance program. Annual flushing is enough for many systems, but some water and emitter combinations require almost daily flushing to control clogging. If frequent flushing is required, automatic and semiautomatic flushing valves are recommended at the ends of the laterals. A water velocity of about 1.0 ft/s is required to flush fine particles from lateral tubing. For ½-in.-diameter tubing this is about 1.0 gpm.

Systematic checking is required to spot malfunctioning emitters. Slow clogging causing partial blockage results from sediments, precipitates, organic deposits, or mixtures of these. Physical deterioration of parts is a concern with pressure-compensating emitters. The flow passage may slowly close as the compensating part wears out. Mechanical malfunction can also be a problem in flushing emitters.

Emitters should be cleaned, replaced, or repaired when emission uniformity (EU) drops 5 to 10 percent below the design uniformity or when the average emitter discharge (q_a) times EU/100 is insufficient to satisfy the plants' requirements for water. The cleaning required depends on the emitter and the problem. Some emitters can be disassembled and cleaned manually. Others can be manipulated and flushed to get rid of loose deposits. Carbonate deposits can be removed by injecting 0.5- to 1-percent acid solution at manifold or lateral inlets. With this treatment, a contact time of 5 to 15 min in the emitters will normally suffice. Sulfuric acid should be used for iron precipitates. Acid treatment may not be practical or 100 percent effective and obviously is ineffective for completely clogged emitters.

Air pressure of 5 to 10 atm applied at lateral inlets can remove jellylike deposits from long-tube emitters. The emitters and connections to the lateral hose, however, must be very strong to withstand the pressure, and the method is not effective for all types of clogging or on all emitters. The use of high water pressure to clean emitters is limited because getting enough pressure to the end emitters is virtually impossible.

Pipeline, valves, and pumps require little maintenance. Normal precautions should be taken for drainage at winter shutdown and for filling in spring. Before spring startup and during the irrigation season, components should be lubricated according to the manufacturer's recommendations.

Trickle irrigation systems are designed and managed to deliver light, frequent applications of water that wet only a section of the soil. The irrigation procedures given in Chapter 1, Soil-Plant-Water Relationships, National Engineering Handbook, Section 15, must be adjusted for trickle application. Under conventional flood and sprinkler water application, the irrigation needs for depth, frequency, and salinity controls are based on maximum moisture storage in the root zone. However, to meet the objective of trickle irrigation, water application is based on moisture replacement in a small area of the soil. This requires determining the wetted area, wetting pattern, and vertical and horizontal water movement in the soil. The values of water requirements, consumptive use, and frequency of irrigation are adjusted accordingly.

Area Wetted

The area wetted (A_w) used in trickle irrigation lies along a horizontal plane about a foot below the soil surface. Because of variation in texture, structure, slope, and horizontal layering of a soil, a mathematical relationship to determine A_w may not be precise.

Table 7–2 gives estimates of A_w at a depth of about 6 to 12 in. in various soils. The table values are based on a common emitter flow rate of 1.0 gph for daily or every-other-day irrigations; the rate of application slightly exceeds the rate of consumptive use. The estimated A_w is given as a rectangle with the wetted width (S_w) equal to the maximum expected diameter of the wetted circle and the optimum emitter spacing (S_e') equal to 80 percent of that diameter. This emitter spacing gives a reasonably uniform and continuous wetted strip. Multiplying S_w by S_e' gives about the same area as that of a circular wetted area.

The most reliable way to determine A_w is to conduct field tests in which test emitters are operated at a few representative sites in a field and the wetting pattern is checked. The flow rate and volume of water applied in a test should be similar to the design values expected for the system under consideration.

The following equipment is needed to make a field test:

1. A 20- to 30-gallon container.
2. A 4-foot stand for the container.
3. A 10-foot piece of ¼- or ⅜-in.-diameter tubing to attach to the bottom of the container.

Table 7–2.—Estimates of area wetted (A_w)[1] in various soils

Soil or root depth and soil texture[3]	Kind of soil layers[2]		
	Homogeneous	Varying layers, generally low density	Varying layers, generally medium density[4]
	$S_e' \times S_w = A_w$ (ft²)	$S_e' \times S_w = A_w$ (ft²)	$S_e' \times S_w = A_w$ (ft²)
Depth 2.5 ft			
Coarse	1.2 × 1.5 = 1.8	2.0 × 2.5 = 5.0	2.8 × 3.5 = 9.8
Medium	2.4 × 3.0 = 7.2	3.2 × 4.0 = 12.8	4.0 × 5.0 = 20.0
fine	2.8 × 3.5 = 9.8	4.0 × 5.0 = 20.0	4.8 × 6.0 = 28.8
Depth 5 ft			
Coarse	2.0 × 2.5 = 5	3.6 × 4.5 = 16.2	4.8 × 6.0 = 28.8
Medium	3.2 × 4.0 = 12.8	5.6 × 7.0 = 39.2	7.2 × 9.0 = 64.8
Fine	4.0 × 5.0 = 20.0	5.2 × 6.5 = 33.8	6.4 × 8.0 = 51.2

[1]Based on an emitter flow rate of 1.0 gph. The estimated A_w is given as a rectangle with the wetted width (S_w) equal to the maximum expected diameter of the wetted circle and the optimum emitter spacing (S_e') equal to 80 percent of that diameter.

[2]Most soils are layered. As used here, "varying layers of low density" refers to relatively uniform texture but with some particle orientation, some compaction layering, or both that gives higher horizontal than vertical permeability; "varying layers of medium density" refers to changes in texture with depth as well as particle orientation and moderate compaction.

[3]"Coarse" includes coarse to medium sands, "medium" includes loamy sands to loams, and "fine" includes sandy clay loam to clays (if clays are cracked, treat as coarse to medium soils).

[4]For soils with varying layers and high density, the A_w may be larger than the values shown.

4. A turbulent-flow emitter with a discharge rate about equal to the expected design flow rate.
5. A 100-ml graduated cylinder.
6. A watch with a second hand.
7. A shovel and soil auger.

The test is performed as follows:

1. Place the container on the stand, and calibrate the test emitter by measuring its discharge when the water level in the container ranges from 7 to 4½ ft.
2. Position the test emitter.
3. Fill the container with the amount of water required to provide the expected design daily flow for an emitter.
4. Release the daily flow requirement through the test emitter. If the soil is very dry, wait 2 or 3 days before checking the wetting pattern.
5. Dig a trench 12 to 18 in. deep through the test emitter location.
6. Measure the width and depth of wetting at 6-in. intervals from the test emitter.
7. Plot the cross section and compute the wetted area.

Figure 7–18 shows the wetting patterns for about 12 gal of water applied to dry sandy soil at rates of 1, 2, and 4 gph. The sandy, clay-textured desert soil was dry before the test. Note that the vertical and horizontal wetting patterns are similar for the three rates with equal volumes of water applied.

The 1-gph emitter produced a wider wetted area than the emitters with higher flow rates, which is unusual. The 4-gph emitter did not cause ponding and the 1-gph emitter provided more time for horizontal water movement. With repeated wettings, as in an irrigation program, the area wetted would probably be larger for the higher flow rates.

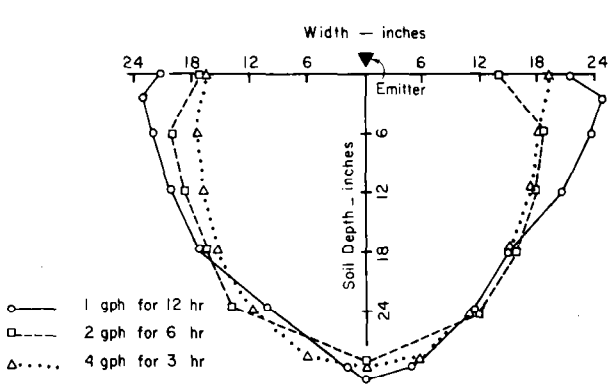

Figure 7–18.—Wetting pattern profiles for equal volumes (12 gal) of water applied at three rates to a dry sandy soil.

Figure 7–19 shows the relationship between the maximum horizontal and vertical movement in a uniform sandy soil for various water-application rates. The data points in the figure further demonstrate that, in uniform soils, the volume of soil wetted depends on the amount of water applied and is relatively independent of the application rate. Figure 7–19 shows that if too much water is applied, the water could easily move past the root zone depth. Light, daily applications minimize deep percolation losses but wet a smaller area.

Spray emitters wet a relatively large area of soil. They are often used instead of drip emitters on coarse-textured homogeneous soils on which many drip emitters would be required to wet a sufficient area.

Figure 7–20 shows the comparison between wetting patterns and areas wetted under drip and spray emitters. Water moves out laterally from the wetted surface area under a spray emitter.

Most soils have layers of various densities, textures, or both. However, assuming large values for A_w without making field tests as described earlier is risky. With many differences in the texture and high density of the soil layers, the A_w may be twice as large as the values given for a layered soil in table 7–2 but this can only be determined by actual field checks. Table 7–2 should be used only for estimation. Values of A_w greater than those given for uniform texture and low-density conditions should

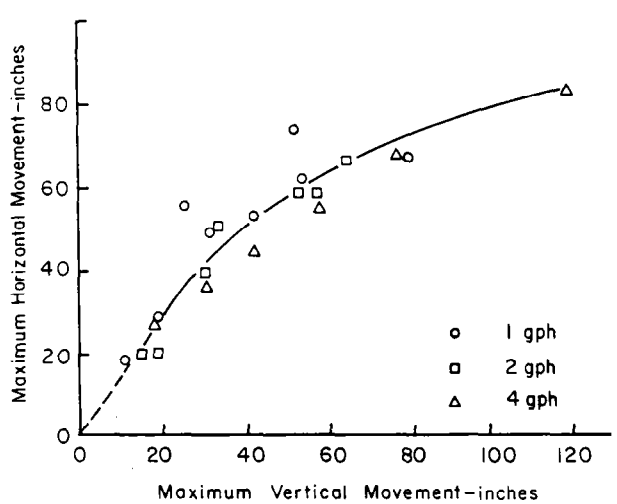

Figure 7–19.—Relationship between vertical and horizontal water movement in a dry sandy soil for various amounts of water and various application rates.

be used with caution until they are checked in the field.

On sloping fields the wetting pattern distorts in favor of the downslope direction. On steep fields this distortion can be extreme, with as much as 90 percent of the pattern on the downslope side. The actual area wetted will be similar to that on flat ground but the distortion should be considered in the placement of emission points.

Percent Area Wetted

The percent area wetted (P_w) is the average horizontal area wetted in the top 6 to 12 in. of the root zone as a percentage of the total crop area.

For a trickle system with straight laterals of single drip emitters and emitter spacing (S_e) equal to or less than optimum emitter spacing (S_e'), the P_w can be computed by equation 7–1.

$$P_w = \frac{eS_eS_w}{S_pS_r} \times 100 \qquad \textbf{(7–1)}$$

Where

- e = number of emission points per plant.
- S_e = spacing between emitters on a lateral, feet.
- S_w = width of the strip that would be wetted by emitters on a lateral at S_e' or closer, feet.
- S_p = plant spacing in the row, feet.
- S_r = plant row spacing, feet.

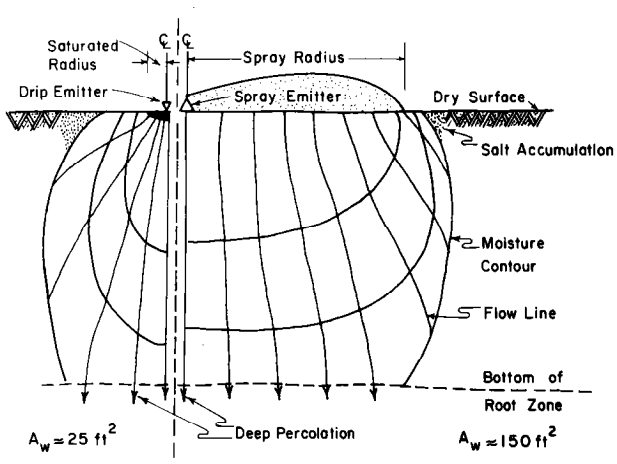

Figure 7–20.—Idealized wetting patterns in a homogeneous fine sandy soil under a drip and a spray emitter.

For trickle systems with straight laterals of single drip emitters where S_e is greater than the optimum emitter spacing (S_e') (80 percent of the wetted diameter, feet), S_e in equation 7–1 must be replaced by S_e'.

For trickle systems with double laterals or zigzag, pigtail, or multiexit layout, the P_w can be computed by equation 7–2.

$$P_w = \frac{eS_e'(S_e' + S_w)}{2(S_pS_r)} \times 100 \qquad \textbf{(7–2)}$$

For double laterals, the two laterals should be placed apart at a distance equal to S_e'. This spacing gives the greatest A_w and leaves no extensive dry areas between the double lateral lines. For the greatest A_w with zigzag, pigtail, and multiexit layouts, the emission points should be placed at a distance equal to S_e' in each direction.

If the layout is not designed for maximum wetting and $S_e < S_e'$, then S_e' in equation 7–2 should be replaced by S_e.

For a trickle system with spray emitters, P_w can be computed by equation 7–3.

$$P_w = \frac{e[A_s + (\tfrac{1}{2}S_e' \times PS)]}{(S_pS_r)} \times 100 \qquad \textbf{(7–3)}$$

Where

- A_s = estimate of the soil surface area wetted per sprayer from field tests with a few sprayers, square feet.
- PS = perimeter of the area directly wetted by the test sprayers, feet.
- $\tfrac{1}{2}S_e'$ = one-half the S_e' values for homogeneous soils (table 7–2), feet.

No single right or proper minimum value for the P_w of various soils has been determined. However, systems designed with high P_w values provide more stored water and are easier to schedule. For widely spaced crops such as vines, bushes, and trees, a reasonable design objective is to wet at least one-third and up to one-half of the horizontal cross-sectional area of the root system. In areas that receive supplemental rainfall, designs that wet less than one-third of the horizontal cross-sectional area of the root system may be adequate for medium- and heavy-textured soils. Wetting should be kept below 50 or 60 percent in widely spaced crops to keep the surface area between rows relatively dry for cultural

practices and reduce evaporation losses. Capital costs of a system increase with the size of the P_w, so the smaller P_w is favored for economic reasons. In crops with rows spaced less than 6 ft apart, the P_w usually approaches 100 percent.

Figure 7–21 shows the relationship that may exist between potential production and P_w for systems providing full plant water requirements. Currently data are too few to enable plotting specific curves for potential crop production vs. P_w. It is reasonable to assume in plotting figure 7–21 that the curves should start near zero for areas that have little or no rainfall and that production would increase rapidly with small increases in P_w. It is also reasonable to assume that production will peak before 100 percent of the area is wetted. Figure 7–21 should be used cautiously because crop-soil-climate systems may vary widely.

Meeting Irrigation Water Requirements

The concept of management-allowed deficit, the amount of plant canopies, the average peak daily transpiration rate, and the application efficiency of the low quarter of the area are considered in determining the depth or quantity of water to be applied at each irrigation and the frequency of irrigation.

The management-allowed deficit (M_{ad}) is the desired soil-moisture deficit (S_{md}) at the time of irrigation; the S_{md} is the difference between field capacity and the actual moisture available at any given time. The M_{ad} is expressed as a percentage of the available moisture-holding capacity of the soil or as the corresponding S_{md} related to the desired soil moisture stress for the crop-soil-water-weather system. Irrigation by sprinkler or flood systems is normally carried out when the S_{md} equals the M_{ad}. With trickle irrigation the S_{md} is allowed to become much more severe before irrigation. In arid areas, an irrigation usually replaces the S_{md}. In humid areas, however, an irrigation may replace less than 100 percent of the S_{md} to leave soil capacity for storing moisture from rainfall.

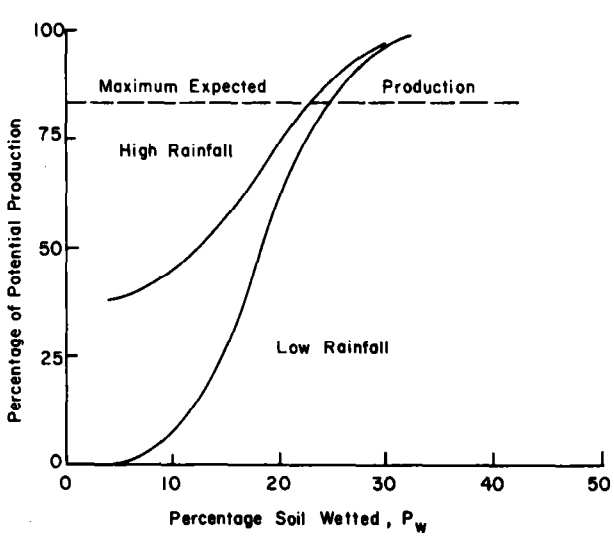

Figure 7–21.—Hypothetical relation of potential production to percent area wetted.

Plant canopy is the area of land surface shaded, in which the vegetation intercepts radiation rays.

Average peak daily transpiration rate is a function of the monthly consumptive use rates.

The application efficiency of the low quarter (E_{lq}) is the ratio of the average low-quarter depth of irrigation water infiltrated and stored in the root zone, or required for leaching, to the average depth of irrigation water applied. The average low-quarter depth infiltrated is the average of the lowest one-fourth of measured or estimated values each representing an equal area of the field. When the average low-quarter depth of irrigation water infiltrated is equal to or less than the S_{md} plus leaching requirements, and minor losses are negligible, the E_{lq} is equal to the field uniformity coefficient. The average seasonal E_{lq} is the seasonal irrigation efficiency.

Maximum Net Depth of Application

The maximum net depth of application (F_{mn}) is the depth of water needed to replace the soil moisture deficit (S_{md}) when it is equal to the management-allowed deficit (M_{ad}). The F_{mn} is computed as a depth over the whole crop area and not just the area wetted (A_w) as previously discussed.

The F_{mn} for trickle irrigation can be computed by equation 7–4.

$$F_{mn} = (M_{ad})(WHC)(RZD)(P_w) \qquad (7\text{–}4)$$

Where

M_{ad} = percentage of management-allowed deficit.
WHC = water-holding capacity of the soil, inches per foot.
RZD = depth of the soil occupied by plant roots, feet.
P_w = percent area wetted.

Consumptive Use Rate

Under trickle irrigation, nonbeneficial use of water is reduced to a minimum. Transpiration by the crop plants accounts for practically all the water consumed. The consumptive use estimates developed from procedures in *Irrigation Water Requirements*[2] require modification for trickle irrigation design. The modification is expressed in terms of average peak daily transpiration rate (T_d), inches per day, for the month of greatest water use. The relationship of T_d to modified consumptive use values from *Irrigation Water Requirements* for trickle irrigation is expressed in equation 7–5.

$$T_d = u_d[P_s + 0.15(1.0 - P_s)] \qquad \textbf{(7–5)}$$

Where

u_d = average daily consumptive-use rate for the month of greatest overall water use, inches per day.

P_s = percent area shaded.

The P_s can be estimated after determining the land area covered by the plant or tree canopy. Equation 7–5 has not been thoroughly verified by field research; however, it is based on a logical analysis coupled with field observations and some field testing.

Seasonal Transpiration

The seasonal transpiration rate (T_s), inches per year, can be computed by replacing u_d in equation 7–5 with the total crop consumptive use (U), inches.

Net Depth of Application

The net depth of application (F_n), inches, for trickle irrigation systems is the net amount of moisture to be replaced at each irrigation to meet the consumptive use requirements. Normally F_n is less than or equal to the maximum net depth of application (F_{mn}). If less than F_{mn} is applied per irrigation, then F_n can be computed by equation 7–6.

$$F_n = T_d I_f \qquad \textbf{(7–6)}$$

Where

T_d = average peak daily transpiration rate for the mature crop, inches per day.

I_f = maximum allowable irrigation interval, days.

Gross Water Application

The gross amount of water to be applied at each irrigation, (F_g), inches, includes sufficient water to compensate for the system nonuniformity and unavoidable losses, and to provide for leaching. Taken into consideration in F_g are the peak-use-period transpiration ratio (T_r), the emission uniformity, and the leaching requirement ratio. The T_r is the ratio of the average peak daily transpiration rate (T_d) to the total water applied. Values of T_r to compensate for unavoidable deep percolation losses are:

1. T_r is equal to 1 for crops with roots deeper than 5 ft in all soils except very porous gravelly soils; for crops with root zones between 2.5 and 5 ft deep in fine- and medium-textured soils; and for crops with root zones less than 2.5 ft deep in fine-textured soils.
2. T_r is equal to 1.05 for crops with deep root zones in gravelly soils; for crops with medium root zones in coarse-textured (sandy) soils; and for crops with shallow root zones in medium-textured soils.
3. T_r is equal to 1.10 for crops with medium root zones in gravelly soils and for crops with shallow root zones in coarse-textured soils.

The design emission uniformity (EU) is an estimate of the percentage of the average depth of application required by a system to irrigate adequately the least watered plants. The EU can be computed by equation 7–7.

$$EU = 100\left(1.01 - \frac{1.27}{\sqrt{e}}v\right)\frac{q_n}{q_a} \qquad \textbf{(7–7)}$$

Where

EU = design emission uniformity, percent.

e = number of emitters per plant (≥ 1).

v = manufacturer's coefficient of variation.

q_n = minimum emitter discharge computed with the minimum pressure using the nominal relationship between emitter discharge and pressure head, gallons per hour.

q_a = average emitter discharge (of all the

[2]Soil Conservation Service. 1967. Irrigation Water Requirements. U.S. Dep. Agric. Soil. Cons. Service., Technical Release 21.

emitters under consideration), gallons per hour.

The leaching requirement ratio (LR_t) will be discussed later.

The F_g can be computed by equation 7–8a and 7–8b. When $T_r \geq 1/(1.0-LR_t)$ or $LR_t \geq 0.1$, the F_g can be computed by equation 7–8a.

$$F_g = \frac{F_n T_r}{EU} \qquad \textbf{(7–8a)}$$

When $T_r < 1/(1.0 - LR_t)$ and $LR_t > 0.1$, the F_g can be computed by equation 7–8b.

$$F_g = \frac{F_n}{EU(1.0 - LR_t)} \qquad \textbf{(7–8b)}$$

Where

F_n = net depth of application, inches.

The gross volume of water required per plant per day [$F_{(gp/d)}$] is a value used in the design of emitter flow rate; $F_{(gp/d)}$, in gallons per day, can be computed by equation 7–9.

$$F_{(gp/d)} = 0.623 \frac{S_p S_r F_g}{I_f} \qquad \textbf{(7–9)}$$

Where

S_p = plant spacing, feet.
S_r = plant row spacing, feet.
I_f = maximum allowable irrigation interval, days.

The annual net depth of application [$F_{(an)}$], inches, to meet consumptive use requirements may be reduced by the effective rainfall during the growing season (R_e), inches, and residual stored soil moisture from off-season precipitation (W_s), inches. The values R_e and W_s are subtracted from seasonal consumptive use requirements.

The F_{an} for trickle irrigation can be computed by equation 7–10.

$$F_{(an)} = (U - R_e - W_s)[P_s + 0.15(1.0 - P_s)] \qquad \textbf{(7–10)}$$

Where

U = seasonal total crop consumptive use, inches.
P_s = percent area shaded.

In using $F_{(an)}$ to make an economic analysis of pumping costs, mean values for R_e and W_s should be used. In determining irrigation water storage, probability of less rainfall should be analyzed.

Seasonal Irrigation Efficiency

The seasonal transpiration (T_s) and seasonal irrigation efficiency (E_s), percent, values are needed to determine requirements for seasonal irrigation-water supplies and pumping.

The E_s is a function of application uniformity; losses from runoff, leaks, line flushing, and drainage; unavoidable deep percolation losses caused by wetting pattern and untimely rainfall; and losses resulting from poor irrigation scheduling.

When the seasonal transpiration ratio (T_R) $\leq 1/(1.0 - LR_t)$, E_s can be computed by equation 7–11.

$$E_s = EU \qquad \textbf{(7–11)}$$

When $T_R > 1/(1.0 - LR_t)$ to satisfy the leaching requirement, E_s can be computed by equation 7–12.

$$E_s = \frac{EU}{T_R(1.0 - LR_t)} \qquad \textbf{(7–12)}$$

Where

LR_t = leaching requirement ratio.
EU = emission uniformity, percent.

The T_R represents the minimum excess amount of water that must be applied to offset unavoidable deep percolation losses. Such losses are due to untimely rains, leakage from the soil, or both while enough water is moving horizontally. With good system design and scheduling, use the T_R values given in table 7–3. The higher T_R values given for humid areas account for untimely rainfall.

Gross Seasonal Depth of Application

The gross seasonal depth of application (F_{sg}), inches, can be computed by equation 7–13.

$$F_{sg} = \frac{F_{an}}{E_s(1.0 - LR_t)} \quad (7\text{–}13)$$

Where

F_{an} = annual net depth of application, inches.
E_s = seasonal irrigation efficiency, percent.
LR_t = leaching requirement ratio.

Gross Seasonal Volume

The gross seasonal volume (V_i), acre-feet, of irrigation water required for an acreage under a trickle system can be computed by equation 7–14.

$$V_i = \frac{F_{an}A}{12(1.0 - LR_t)E_s/100} \quad (7\text{–}14)$$

Where

F_{an} = annual net depth of application, inches.
A = area under the system, acres.
E_s = seasonal irrigation efficiency, percent.
LR_t = leaching requirement ratio.

Plant Response

Plant response is about the same to trickle irrigation as to other methods of irrigation. Even mature orchards that have been irrigated by sprinkle or surface irrigation methods can be converted to trickle irrigation. The root systems of most trees can adapt to the smaller wetted area in a few months. Thus, the conversion should be made just before or during the low use or dormant season; the tree's root system will then have time to adapt with little shock before the peak use period. Conversely, conversions made during the peak use period can severely stress a mature orchard. In very young orchards conversions can be made at any time.

If there is enough precipitation to wet the soil a few feet deep, plant roots will extend beyond the trickle-irrigated area. This root activity is important; it may account for a significant amount of the water and nutrient uptake. There is little evidence that root anchorage is a problem under trickle irrigation where $P_w \geq 33$ percent, but in high wind areas, any root extension that resulted from natural precipitation would be helpful.

Optimum Moisture Levels

Optimum moisture levels are easily maintained with a well-designed trickle irrigation system. Even without automation, daily irrigations are done almost as easily as weekly irrigations. Therefore, systems are often run daily, every other day, or twice weekly depending on crop needs and agronomic practices. Under frequent irrigation, the plant roots undergo little shock or stress from irrigation. The roots can seek and remain in a constant favorable environment.

It is important to wet a relatively large part of the potential root system to ensure some degree of safety (moisture reserve) in case of temporary system failure. It is also important to have a large enough volume of moist soil to promote root extension and water uptake.

Table 7–3.—Seasonal transpiration ratios for arid and humid regions with various soil textures and rooting depths

Climate zone and root depth	T_R[1] for indicated soil texture			
	Very coarse	Coarse	Medium	Fine
Arid				
<2.5 ft	1.15	1.10	1.05	1.05
2.5 to 5.0 ft	1.10	1.10	1.05	1.00
>5.0 ft	1.05	1.05	1.00	1.00
Humid				
<2.5 ft	1.35	1.25	1.15	1.10
2.5 to 5.0 ft	1.25	1.20	1.10	1.05
>5.0 ft	1.20	1.10	1.05	1.00

[1]Seasonal transpiration ratios (T_R) are for drip emitters. For spray emitters add 0.05 to T_R in humid climates and 0.10 in arid climates.

Salinity Control

All irrigation water contains some dissolved salts, which are usually pushed toward the fringes of the wetted soil mass during the irrigation season. By applying more water than the plants consume, most of the salts can be pushed or leached below the root zone, but it is impossible to avoid having some areas of salt accumulation.

The most critical zones of accumulation are along the fringes of the wetted surface (fig. 7–20). A light rain can leach these accumulated salts down into the zone of extensive root activity and thereby severely injure plants. This hazard can be minimized by operating the trickle system during any rainy period to wash the salts down and out of the root zone.

If rainfall is less than 6 to 10 in. per year, supplemental applications by sprinkler or surface irrigation may be necessary to prevent critical levels of salt buildup. Supplemental applications are especially important where irrigation water is saline or where annual crops may be planted in the salty fringe areas of previous years' wetted patterns.

Crop Tolerance and Yield

Trickle irrigation affords a convenient and efficient method of frequent irrigation that does not wet the plant leaves. Applying frequent light irrigations keeps the salt concentration in the soil water to a minimum. Daily applications and sufficient leaching keep the salt concentrations in the soil water at almost the same level as that in the irrigation water because there is little drying between irrigations, and therefore the salts remain diluted. When irrigations are infrequent, the salts become more concentrated as the soil dries.

With good-quality water, yields with trickle irrigation should be equal to or slightly better than those with other methods under comparable conditions. With poor-quality water, yields may be better with trickle irrigation because of the continuous high moisture content and daily replenishment of water lost by evapotranspiration. Frequent sprinkler irrigation might give similar results, but saline water causes leaf burn and defoliation of sensitive plants.

Salts that accumulate below the emitters can be flushed down continuously by irrigations properly applied daily or every other day. If the leaching requirement ratio (LR_t) is more than 0.1, the daily irrigations should include enough extra water to maintain a slight but nearly continuous downward movement of water to control the salts.

Knowledge of the electrical conductivity of the irrigation water (EC_w), mmhos per centimeter, and the electrical conductivity of the saturated soil extract (EC_e), mmhos per centimeter, is useful in determining crop tolerance to an irrigation water. The minimum (min) and maximum (max) EC_e are useful in estimating leaching requirements under trickle irrigation. The min EC_e is the maximum concentration of salinity at which yields are unimpaired. The max EC_e is the theoretical level of salinity that would reduce yield to zero; i.e., if the entire root zone were at this salinity, the plants would not extract water, and growth would stop. Table 7–4 gives values for min and max EC_e for various crops. These values were extrapolated from test data that gave 0-, 10-, 25-, and 50-percent reductions in yield.

The theoretical reduction in yield (Y), percent, for various crops that is caused by salinity in the trickle irrigation water when $EC_w >$ min EC_e can be estimated by equation 7–15.

$$Y = \frac{EC_w - \min EC_e}{\max EC_e - \min EC_e} \times 100 \qquad \textbf{(7–15)}$$

For high-frequency irrigation, if $EC_w \leq$ min EC_e, Y will be zero.

Leaching Requirement

Harmful soluble salts must be removed from the crop root zone in irrigated soils if high crop production is to be sustained.

In arid regions where salinity is a major problem, additional irrigation water must be applied for leaching. In determining the requirements for trickle irrigation to supply leaching water, the leaching requirement ratio (LR_t), the ratio of the equivalent depth of the drainage water to the depth of irrigation water, is used. Most of the natural precipitation available has been accounted for in average annual effective rainfall (R_e) for meeting average consumptive use. Therefore, in arid areas very little of the R_e helps satisfy the leaching requirement. Furthermore, because only a part of the soil area is wetted and needs leaching under trickle irrigation, the effects of R_e in determining LR_t can almost always be neglected, and LR_t can then be computed by equation 7–16.

Table 7–4.—Minimum (min) and maximum (max) values of EC_e for various crops[1]

Crop	EC_e (mmhos/cm) Min	Max	Crop	EC_e (mmhos/cm) Min	Max
Field crops					
Barley	8.0	28	Corn	1.7	10
Cotton	7.7	27	Flax	1.7	10
Sugarbeet	7.0	24	Broadbean	1.6	12
Wheat	6.0	20	Cowpea	1.3	8.5
Sorghum	4.0	18	Bean	1.0	6.5
Fruit and nut crops					
Date palm	4.0	32	Apricot	1.6	6
Fig, olive	2.7	14	Grape	1.5	12
Pomegranate	2.7	14	Almond	1.5	7
Grapefruit	1.8	8	Plum	1.5	7
Orange	1.7	8	Blackberry	1.5	6
Lemon	1.7	8	Boysenberry	1.5	6
Apple, pear	1.7	8	Avocado	1.3	6
Walnut	1.7	8	Raspberry	1.0	5.5
Peach	1.7	6.5	Strawberry	1.0	4
Vegetable crops					
Beets	4.0	15	Sweet corn	1.7	10
Broccoli	2.8	13.5	Sweet potato	1.5	10.5
Tomato	2.5	12.5	Pepper	1.5	8.5
Cucumber	2.5	10	Lettuce	1.3	9
Cantaloupe	2.2	16	Radish	1.2	9
Spinach	2.0	15	Onion	1.2	7.5
Cabbage	1.8	12	Carrot	1.0	8
Potato	1.7	10	Bean	1.0	6.5

[1]Taken from Ayers, R.S., and D.W. Westcot. 1976. Water Quality for Agriculture. U.N. Food and Agric. Org. Irrigation and Drainage Paper 29.

Note: Min EC_e does not reduce yield; max EC_e eliminates yield.

$$LR_t = \frac{L_n}{F_n} = \frac{L_N}{F_{an}} = \frac{EC_w}{EC_{dw}} \quad (7\text{–}16)$$

Where

L_n = net leaching requirement for net application per irrigation, inches.
F_n = net depth of application, inches.
L_N = annual leaching requirement for net seasonal application, inches.
F_{an} = annual net depth of application, inches.
EC_w = electrical conductivity of the irrigation water, mmhos per centimeter.
EC_{dw} = electrical conductivity of the drainage effluent, mmhos per centimeter.

Equation 7–16 is based on a steady salt balance or, in popular terminology, "what goes in must come out, and nothing comes from in between." It is important to understand the meaning of the value calculated for LR_t. It represents the minimum amount of water (in terms of a fraction of the applied water) that must pass through the root zone to prevent salt buildup. The actual LR_t, however, can be determined only by monitoring soil salinity.

The LR_t for high-frequency, daily, or alternate-day irrigation can be computed by equation 7–17.

$$LR_t = \frac{EC_w}{2(\max EC_e)} \quad (7\text{–}17)$$

Where

EC_e = electrical conductivity of the saturated soil extract, mmhos per centimeter.

Once F_n or F_{an} is determined, the total net water requirement may be computed by $F_n/(1.0 - LR_t)$ or $F_{an}/(1.0 - LR_t)$.

The calculated LR_t should be adequate to control salts unless they already exceed the crop's tolerance. If they do, an initial heavy leaching, preferably by sprinkle or surface irrigation, may be needed.

A step-by-step procedure is normally followed in designing a trickle irrigation system. In trickle irrigation, water is carried in a pipe network to the points where it infiltrates the soil. The primary objective of good trickle-irrigation-system design is to irrigate adequately the least-watered plant. Uniformity of application depends on the uniformity of emitter discharge. Nonuniform discharge is caused by pressure differences resulting from friction loss and elevation, by emitter variation within manufacturing tolerances, and by clogging.

Design Criteria

Emitters dissipate the pressure in the pipe distribution network as the water flows from the lateral hoses into the atmosphere. The pressure is dissipated by small-diameter orifices, a series of orifices, vortex chambers, short tubes, long tubes, or tortuous flow paths. A general knowledge of the emitter design theory for the various pressure-dissipation methods helps in selecting an emitter design.

Some important design criteria that affect efficiency and performance of trickle systems are:

1. Efficiency of filtration.
2. Permitted variations of pressure head.
3. Base operating pressure used.
4. Degree of flow or pressure control used.
5. Relationship between discharge and pressure at the pump or hydrant supplying the system.
6. Allowance for temperature correlation for long-path emitters.
7. Chemical treatment to dissolve mineral deposits.
8. Use of secondary safety screening.
9. Incorporation of flow monitoring.
10. Allowance for reserve system capacity or pressure to compensate for reduced flow from clogging.

A checklist of procedures in designing a trickle irrigation system follows. Some of the steps are discussed in other chapters of Section 15, Irrigation, National Engineering Handbook, or in earlier sections of this chapter.

1. Inventory available resources and operating conditions. Include information on soils, topography, water supply, power source, crops, and farm operation schedules following instructions in Chapter 3, Planning Farm Irrigation Systems.
2. Determine water requirement to be met with

a trickle system, as discussed in Soil-Plant-Water Considerations in this chapter.

3. Determine appropriate type of trickle system.
4. Select and design emitters.
5. Determine capacity requirements of the system.
6. Determine required sizes of main-line pipe, manifold, and lateral lines.
7. Check pipe sizes for power economy.
8. Determine maximum and minimum operating conditions.
9. Select pump and power unit for maximum operating efficiency within the range of operating conditions.
10. Determine appropriate filter system for site conditions.
11. Determine requirements for chemical fertilizer equipment.
12. Plan field evaluation.
13. Prepare drawings, specifications, cost estimates, schedules, and instructions for proper layout, operation, and maintenance.

Emitter Selection Criteria

Selecting emitters requires a combination of objective and subjective deduction.

Emitter design and selection procedures require an assessment of discharge, spacing, and the type of emitter to be used. This process is one of the most critical factors in the design of a trickle irrigation system. It is not simply a matter of following a checklist of instructions; it requires the designer to reason because the various decisions required are interrelated.

System efficiency depends on the emitter selection and the design criteria. Some emitter characteristics that affect efficiency are:

1. Discharge rate variations caused by emitter variation within manufacturing tolerances.
2. Closeness of discharge-pressure relationship to design specifications.
3. Emitter discharge exponent.
4. Possible range of suitable operating pressures.
5. Pressure loss on lateral lines caused by the connection of emitters to the lateral.
6. Susceptibility to clogging, siltation, or buildup of chemical deposit.
7. Stability of discharge-pressure relationship over a long period.

The choice of emitters depends not only on emitter physical characteristics, but also on emitter placement, type of operation, diameter of laterals, and user preference. Selection requires four steps: (1) evaluate and choose the general type of emitter that best meets the need in the area to be wetted; (2) choose the specific emitter needed to meet the required discharge, spacing, and other planning considerations; (3) determine the average emitter discharge (q_a) and pressure-head (h_a) requirements; and (4) determine the allowable subunit pressure-head variation ($\triangle H_s$) for the desired emission uniformity (EU).

The two most important items in emitter selection are the percent area wetted (P_w) and the emitter reliability (resistance to clogging and malfunctioning). The greater the P_w, the longer the system can be down or an emitter can be plugged before the plants become excessively stressed.

Initially, emitter selection depends on the soil, plant water requirement, emitter discharge, water quality, and terrain of a particular location. The choice of a particular emitter should follow a detailed evaluation that includes emitter cost and system risks. Generally, the emitters offering the more desirable features and lower system risks have a higher unit cost. Also to be evaluated is the effect a particular emitter will have on the cost of the main line and filtration system.

A reasonable design objective is to have enough emission points to wet at least one-third and up to one-half of the potential horizontal cross section of the potential root system. There is some interaction between the emitter discharge rate and area wetted per emission point; but the density of emission points required to obtain $P_w \geq 33$ percent can usually be based on a 1-gph emitter discharge rate by using the procedures described under Area Wetted.

The water required for plant growth increases until the plant reaches its peak-use growth stage. Lower initial installation costs and water savings can be achieved by installing the number of emitters required for each stage of growth. The initial pipe network, however, must be designed to meet the needs of the mature plant. Operating the system with less than the ultimate number of emitters usually affects the uniformity of application. The best choice is a balance between (1) higher installation costs and lower water-use efficiency and (2) lower installation costs, higher water-use effi-

ciency, and added installation costs at a later date.

Ideally, emitters should (1) be long lasting and inexpensive; (2) discharge at a relatively low rate that does not vary significantly between emitters because of variation within manufacturing tolerances, expected differences in pressure head resulting from friction loss and elevation, or expected changes in temperature; and (3) have relatively large passageways or be self-flushing to reduce clogging. These goals are not easily met in the design of an emitter because they are contradictory to a certain extent.

General Suitability

General emitter suitability means how well the emitter fits into the particular design and matches the size and water requirements of the crop. Emission devices are available that will emit water at individual point locations or along the length of a line. The point source devices come with single or multiple outlets. With more than one outlet, distribution tubing is generally used to deliver the water from the emitter to the desired discharge location.

Single-outlet emitters can be used to water small individual areas or can be arranged around larger plants to provide dual- or multiple-outlet emission points. Dual-outlet emitters are often used on vines, and multiple-outlet emitters are generally used in orchards, where each tree may require several emission points.

The cost of emitters is not proportional to the number of outlets. For instance, a dual-outlet emitter is probably more expensive than an otherwise comparable single-outlet emitter but less expensive than two single-outlet emitters. Thus, emitters with more outlets are generally less expensive per outlet.

For row crops such as strawberries or vegetables, line-source tubing fits well with the cropping pattern because it provides the linear wetted strip desired. Cost is especially important in row-crop trickle irrigation because the density of the crop requires a large amount of line-source tubing. Emitters also can provide linear wetted strips for row crops.

As well as fitting in with the intended cropping pattern, the emitting system chosen must be able to deliver the right flow rate at the right pressure. Because there are so many emission points within a field, even a small difference between the actual and desired discharge rates can add up to a significant difference in pump and pipe-sizing requirements.

Sensitivity to Clogging

For the low discharge rates required in trickle irrigation, an emitter's flow channel must be about 0.01 to 0.10 in. These small passageways make all emitters susceptible to clogging and require careful filtration of all the irrigation water. Filtering to remove particles 10 or more times smaller than the emitter passageway is a typical recommendation. Some flushing-type emitters require less filtration. Long-path emitters, which have the largest passageways for a given flow rate, may still require filtering of even the smaller particles to prevent clogging.

Two characteristics that are a guide to clogging sensitivity are flow-passage size and water velocity in the passageway of the emitter. Emitter sensitivity to clogging may be classified by minimum passageway dimension as:

1. Very sensitive, for a minimum passageway dimension of less than 0.023 in.
2. Sensitive, for a minimum passageway dimension of 0.028 to 0.060 in.
3. Relatively insensitive, for a minimum passageway dimension greater than 0.060 in.

Velocities of about 14 to 20 ft/s through the emitter passageway also reduce clogging.

Emitter discharges usually are rated at a temperature of 68 °F and a pressure of 15 to 30 psi. Line-source tubing is usually rated at less than 15 psi. An orifice emitter has a flow cross section of about 0.008 to 0.024 in. and a flow capacity of 0.5 to 2.5 gph, and tends to clog easily. A long-path emitter has a flow cross section of about 0.02 to 0.055 in. and a flow capacity of 0.05 to 2.0 gph. The long-path emitters do not clog as much if velocities are high.

Some emitters have a flushing feature to reduce clogging sensitivity. Capabilities range from allowing flushing at startup and shutdown to allowing flushing continually. If the flushing control mechanism depends on gravity, it must be kept upright in the field. The continually flushing emitters have a series of orifices in a resilient material to dissipate the pressure. When the emitter clogs, line pressure builds up behind the particle and forces the orifice to expand and let the particle pass through.

Recent experience with line-source tubing has shown that clogging can be significantly reduced by regularly flushing the lateral, using either automatic flushing valves or valves connected to a separate pressure source so that all lateral ends can

be flushed by turning one valve. Even where good-quality water is used, flushing provides an added safety factor for continual operation of a system. This practice should be considered for all emitter laterals, especially if nonflushing emitters are selected.

Clearly an easy way to ascertain an emitter's sensitivity to clogging is to consider the manufacturer's recommendations for filtration. The greater the sensitivity, the finer the filtration should be. Of course local user experience based on the sensitivity to clogging of the various emitters in use locally is also a good gage of filtration requirements.

Manufacturing Variation

It is impossible to manufacture any two emitters exactly alike. The small differences between what appear to be identical emitters cause significant discharge variations.

The variations in passage size, shape, and surface finish that do occur are small in absolute magnitude but represent a relatively large percent variation. Also, some emitters use an elastomeric material to achieve a pressure-compensating or flushing ability, and such materials are inherently difficult to prepare with consistent dimensions and characteristics. The amount of difference to be expected varies with the emitter's design, materials used in its construction, and care with which it is manufactured.

The emitter coefficient of manufacturing variation (v) is used as a measure of the anticipated variations in discharge in a sample of new emitters. The value of v should be available from the manufacturer, or it can be estimated from the measured discharges of a sample set of at least 50 emitters operated at a reference pressure head. The value of v can be computed by equation 7–18.

$$v = \frac{S}{\bar{q}} \qquad \textbf{(7–18)}$$

$$= \frac{\sqrt{q_1^2 + q_2^2 \ldots + q_n^2 - n(\bar{q})^2}/\sqrt{n-1}}{\bar{q}}$$

Where

v	=	emitter coefficient of manufacturing variation.
$q_1, q_2 \ldots q_n$	=	individual emitter discharge-rate values, gallons per hour.
n	=	number of emitters in sample.
$\bar{q}$	=	average discharge rate of the emitters sampled, gallons per hour.
S	=	unbiased standard deviation of the discharge rates of the sample.

The v is a very useful characteristic with rather consistent physical significance, because the discharge rates for emitters at a given pressure are essentially normally distributed. The physical significance of v is derived from the classic bell-shaped normal distribution curves, in which:

1. Essentially all the observed discharge rates fall within $(1 \pm 3v)\bar{q}$.
2. About 95 percent of the discharge rates fall within $(1 \pm 2v)\bar{q}$.
3. The average of the low 25 percent of the discharge rates is about equal to $(1 - 1.27v)\bar{q}$.
4. About 68 percent of the discharge rates fall within $(1 \pm v)\bar{q}$.

Thus, for an emitter having $v = 0.06$ (which is average) and $\bar{q} = 1.0$ gph, 95 percent of the discharges can be expected to fall within the range of 0.88 to 1.12 gph, and the average discharge of the low 25 percent will be about 0.92 gph.

As a general guide, manufacturing variation can be classified as:

Drip and spray emitters	
$v \leq 0.05$	excellent
$0.05 < v \leq 0.07$	average
$0.07 < v \leq 0.11$	marginal
$0.11 < v \leq 0.15$	poor
$0.15 < v$	unacceptable

Line-source tubing	
$v \leq 0.10$	good
$0.10 < v \leq 0.20$	average
$0.20 < v$	poor to unacceptable

A lower standard is used for line-source tubing because it is difficult to keep both the variation and the price low; the outlets are normally closely spaced; and row crop production is relatively insensitive to moderate variations in closely spaced water application.

System Coefficient of Manufacturing Variation

The system coefficient of manufacturing variation (v_s) is a useful concept because more than one emitter or emission point may be used per plant. In such

an instance, the variations in flow rate for each emitter around the plant partly compensate for one another. One emitter might have a high flow rate and another would probably have a low flow rate; on the average, the variation in the total volume of water delivered to each plant is less than might be expected from considering v alone. The v_s can be computed by equation 7–19.

$$v_s = \frac{v}{\sqrt{e'}} \qquad (7\text{–}19)$$

Where

v = emitter coefficient of manufacturing variation.

e′ = minimum number of emitters per plant, or 1 if one emitter is shared by more than one plant.

Line-source systems may have only one outlet per plant; however, because of the close spacing of outlets, each plant may receive its water from two outlets. If multioutlet emitters with small-diameter distribution tubing are used (fig. 7–10), the proper value of e′ depends on the design of the individual emitter. If one common loss element serves several outlets, e′ is equal to 1. If there is a separate pressure-loss passageway for each outlet, then the emitter is really multiple emitters in a single housing, and e′ is the number of outlets. It should be emphasized that v is a property of the emitter alone, and v_s is a property of the trickle irrigation system as a whole.

Sprayers must apply a relatively uniform depth of water to the directly wetted soil surface. Some variation between emitters in the areal depth applied is acceptable, but differences in distribution of soil moisture are likely to be unacceptably great when the depth of application varies by more than 2:1 between points 3 ft or farther apart.

Relation of Pressure to Discharge

The relation between changes in pressure head and discharge is a most important characteristic of emitters. Figure 7–22 shows this relationship for various types of emitters. The emitter discharge exponent (x) measures the flatness of the discharge-pressure curve, and the desirability of an emitter that has a discharge-pressure curve with a low x is clear. Compensating emitters have a low x; however, since they all have some physical part that responds to pressure, their long-range performance requires careful consideration. The compensating emitters usually have a high coefficient of manufacturing variation (v), and their performance may be affected by temperature, material fatigue, or both.

On undulating terrain the design of a highly uniform system is usually constrained by the pressure sensitivity of the average emitter. Compensating emitters provide an immediate solution. Emitters of various sizes may be placed along the lateral to meet pressure variations resulting from changes in elevation. The practicality of using emitters of more than one size in the field should to be assessed.

The lateral length, even on smooth fields, must be kept reasonably short to avoid excessive differences in pressure. Factors affecting the maximum length of run are the flow rate per plant, the emission uniformity, the emitter selected, the lateral pattern, and the terrain. In some installations, field dimensions and cultural practices affect the maximum length of run.

In laminar-flow emitters, which include the long-path, low-discharge devices, the relation between the discharge and the operating pressure is linear, i.e., doubling the pressure doubles the discharge. Therefore, the variations in operating pressure head within the system are often kept to within ±5 percent of the desired average.

In turbulent-flow emitters, the change in discharge varies with the square root of the pressure

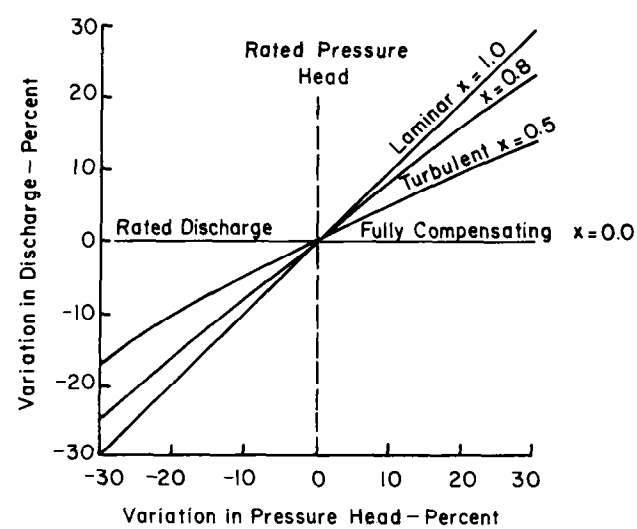

Figure 7–22.—Discharge variations resulting from pressure changes for emitters with various discharge exponents (x).

head, i.e., x = 0.5, and the pressure must be increased four times to double the flow. Therefore, the pressure head in systems with turbulent-flow emitters is often allowed to vary by ±10 percent of the desired average.

Flow-compensating emitters regulate flow to various degrees, and x may be less than 0.5. If flow regulation is absolute, x = 0.0. Absolute flow regulation might be undesirable, however, if it ever became necessary to compensate for underdesign or for decreased emitter discharges resulting from slow clogging or emitter deterioration, because increases in pressure would not increase flow. When x ranges between 0.3 and 0.4, flow is substantially regulated (i.e., a 50-percent head differential would cause only a 13- to 18-percent variation in discharge, and some compensating ability would also be maintained). Compensating emitters are valuable chiefly for use on hilly sites where designing for uniform pressure along the laterals and manifolds is impractical.

Relation of Temperature to Discharge

An emitter may be sensitive to water temperature for any of three reasons. Some emitters are designed so that their flow rate depends on the viscosity of the water, which changes with temperature. Most emitters are somewhat sensitive to water temperature because of dimensional changes in the flow passage. Emitters with parts made of resilient material (e.g., pressure-compensating emitters) may be subject to variation in flow from a change in material characteristics caused by changing temperature.

There is a temperature difference between the air and water in the pipe, especially if the lateral pipe lies in the sun. As the water moves through the system and changes temperature (usually warming), the uniformity of the discharge may also change. A small decrease in viscosity resulting from water warming as it flows toward the ends of laterals may partially compensate for the usual decrease in pressure.

Connection Losses

The three main types of lateral connections are in-line, on-line, and on-line-riser. Figure 7–17 shows that the in-line connection has the simplest configuration. On-line-risers are used in subsurface applications. But the subsurface method is cost effective only when the emitter spacing is wide, or where it provides agronomic advantages.

Stress cracking caused by emitter barbs' stretching the lateral wall can be a problem. Excess stress causes premature aging at the joint, resulting in cracks and leakage, and in extreme cases the emitters may blow out. This potential hazard can be prevented by connecting on-line emitters to the lateral with barbs in properly sized, smooth-edged, punched-out holes. In-line emitters should be provided with compression barbs or compression ring fittings.

The emitter-connection friction loss as an equivalent length of lateral (f_e) is a useful term in estimating loss from friction in laterals. The f_e depends on the size and type of barb and on the inside diameter (ID) of the lateral. Figure 7–23 gives estimated f_e values for in-line emitters and for on-line barbs of three different sizes as a function of the ID of the lateral.

Performance

Test data for a number of emitters are presented in table 7–5. All tests were made with clean water at a standard temperature of 68 °F on new emission devices obtained from retail outlets. A summary of the test results follows:

1. The emitter discharge exponents (x) for the devices tested ranged from 0.11 to 1.0. Emitters having x values less than 0.5 may be termed "pressure compensating." Pressure compensation is not a

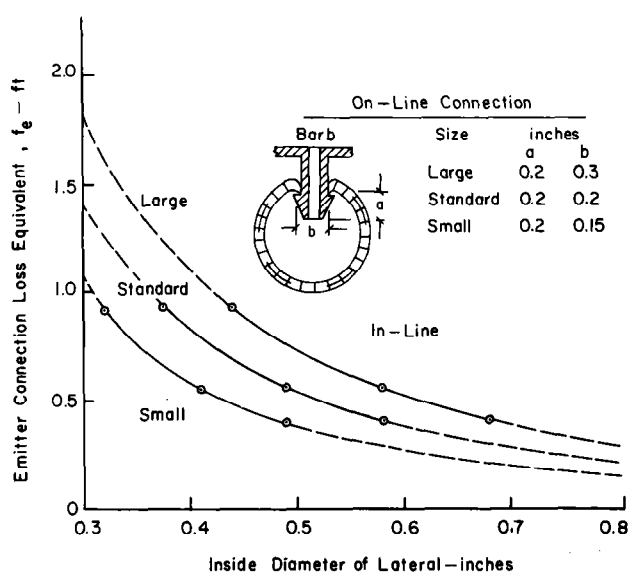

Figure 7–23.—Emitter-connection loss (f_e) values for various sizes of barbs and inside diameters of laterals

yes-or-no feature of emission devices; available devices had various degrees of compensation.

2. Measured emitter coefficients of manufacturing variability (v) ranged from 0.02 to 0.40. Most devices seemed to be manufactured with a consistency of $v \cong 0.06$.

3. The temperature-discharge ratio (TDR) revealed a wide range of discharge sensitivity to water temperature. At an elevated temperature, some devices discharged as much as 21 percent less than normal, but one discharged nearly four times normal flow. Several devices, however, were relatively insensitive to water temperature.

Generalizing from these data requires care. Emitters of the same design may have quite different performance characteristics, depending on the materials used in their construction and the care and precision with which they were manufactured. Table 7–5 provides a useful guide for the probable characteristics and important features of the various types of emitters.

Discharge Exponent

The emitter discharge exponent (x) characterizes the flow regime and discharge-versus-pressure relationship of the emitter. The emitter discharge (q), gallons per hour, for most emitters or sprayers can be computed by equation 7–20.

Table 7–5.—Test characteristics of emission devices[1]

Emission device[2]	x[3]	v[4]	TDR[5] 113 °F	TDR[5] 149 °F	MFPD[6]	Flushing ability
					Inches	
Orifice						
Vortex/orifice	0.42	0.07	0.92	0.88	0.024	None
Multiple flexible	0.7	0.05	1.04	1.07	—	Continuous
orifices	0.7	0.07	1.04	1.07	—	Continuous
Ball & slotted	0.50	0.27	1.15	1.21	(0.012)	Automatic
seat	0.49	(0.25)	0.83	0.79	(0.012)	Automatic
Compensating ball	0.15	0.35	0.85	0.81	0.012	Automatic
& slotted seat	0.25	0.09	0.90	0.89	(0.012)	Automatic
Capped orifice	0.56	(0.05)	(1.03)	(1.05)	0.04	None
sprayers	0.53	(0.05)	(1.03)	(1.05)	0.06	None
Long path						
Small tube	0.70	0.05	1.08	1.13	0.039	None
	0.80	0.05	1.16	1.22	0.039	None
Spiral path	0.75	0.06	1.19	1.18	0.031	Manual
	0.65	0.02	(1.10)	(1.15)	0.028	None
Compensating	0.40	0.05	1.19	1.33	(0.030)	None
	0.20	0.06	1.11	1.24	(0.030)	Automatic
Tortuous	0.50	(0.08)	1.40	1.70	0.031	None
	0.65	0.02	1.08	1.14	(0.039)	None
Short path						
Groove & flap	0.33	0.02	1.00	1.00	0.012	Automatic
Slot & disc	0.11	0.10	1.06	1.08	0.012	Automatic
Line source						
Porous pipe	1.0	0.40	2.70	3.80	—	None
Twin chamber	0.61	0.17	(1.05)	(1.10)	(0.016)	None
	0.47	(0.10)	(1.04)	(1.08)	(0.016)	None

[1]Test data at a standard operating temperature of 68 °F. Numbers in parentheses are estimates.
[2]Double entries indicate different devices of the same general type.
[3]Emitter discharge exponent (eq. 7–20).
[4]Emitter coefficient of manufacturing variation (eq. 7–18).
[5]Temperature-discharge ratio, the ratio of the emitter discharge at a temperature higher than 68 °F to that at 68 °F.
[6]Minimum flow-path dimension—not meaningful with continuous flushing.

$$q = k_d h^x \quad (7\text{–}20)$$

Where

k_d = constant of proportionality (discharge coefficient) that characterizes each emitter.
h = working pressure head at the emitter or sprayer, pounds per square inch.

The x for the discharges at two operating pressure heads can be determined by equation 7–21.

$$x = \frac{\log (q_1/q_2)}{\log (h_1/h_2)} \quad (7\text{–}21)$$

Where

q_1, q_2 = emitter discharges, gallons per hour.
h_1, h_2 = pressure heads corresponding to q_1, q_2, respectively, pounds per square inch.

The x for the discharges at two operating pressure heads may also be obtained graphically by measuring the slope of the line connecting the two discharge values and respective pressure-head values plotted on log-log graph paper.

Sample calculations.—Determine graphically the discharge exponent and discharge coefficient from discharge-versus-pressure head data for a vortex emitter, and find the head required to produce any given discharge.

Given: Emitter discharges (q), at pressure heads (h): 1.00 gph at 10.0 psi, 1.34 gph at 20.0 psi.

Find: Discharge exponent (x) and pressure head (h) at which q = 1.20 gph (fig. 7–24).

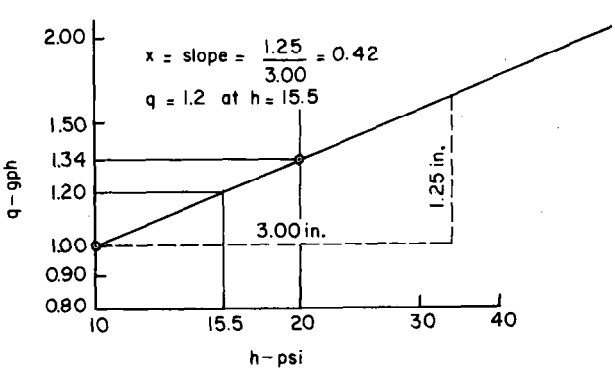

Figure 7–24.—Graphical method for determining the discharge exponent (x) in a sample calculation.

Types of Emitters

Long-Path Emitters

Most of the head loss in a smooth long-path emitter (fig. 7–25) occurs in the long-flow-path section. The flow in this section is laminar. Laminar-flow emitters are quite sensitive to pressure differences in the trickle system. The length of the path needed for a required loss of head and a known discharge for a laminar-flow range in a long-path emitter with a circular cross section can be computed by equation 7–22.

$$l_c = \frac{hgd^4\pi}{98.6q\nu} \quad (7\text{–}22)$$

Where

l_c = length of the flow path in the emitter, feet.
h = working pressure head of the emitter, feet.
g = acceleration of gravity (32.2 ft/s²).
d = flow cross-section diameter, inches.
q = emitter discharge, gallons per hour.
ν = kinematic viscosity of water, square feet per second.

The spiral effects of flow at entrance and other irregularities in the long-path emitters create considerable turbulence. If turbulence exists, emitter head-loss characteristics computed by equation 7–22 would not be correct and the emitter should be evaluated as a tortuous-path emitter.

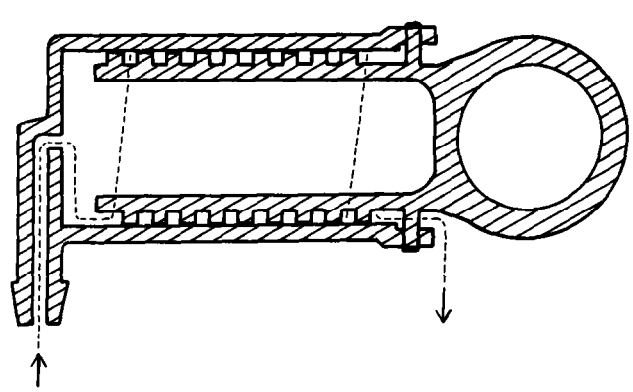

Figure 7–25.—Cross section of a long-path emitter that can be opened for easy cleaning.

Tortuous- and Short-Path Emitters

Tortuous-path emitters have relatively long flow paths. Pressure head loss is caused by a combination of wall friction, sharp bends, contractions, and expansions. Some tortuous-path emitters look similar to ordinary long-path emitters; however, their flow channel is typically shorter and the cross section is larger for the same discharge (q). Since the flow regime is almost fully turbulent, the q varies more nearly with the square root of the working pressure head (h) than with h itself.

Short-path emitters generally behave like orifice emitters because the entrance characteristics (losses) dominate the flow in the short tube section. However, many short-path emitters are pressure compensating; this is explained under Compensating Emitters.

Orifice Emitters

The flow in orifice emitters is fully turbulent. Many drip and spray emitters and single-chamber line-source tubing are classified as orifice emitters. In a nozzle or orifice emitter, water flows through a small-diameter opening or series of openings where most of the pressure head loss takes place. The discharge of the orifice emitter (q), gallons per hour, can be computed by equation 7–23.

$$q = 187ac_q\sqrt{2gh} \qquad \textbf{(7–23)}$$

Where

- a = flow cross section, square inches.
- c_q = coefficient that depends on the characteristics of the nozzle; c_q ranges from 0.6 to 1.0.
- g = acceleration of gravity (32.2 ft/s²).
- h = working pressure head of emitter, feet.

Twin-Chamber Tubing

Most of the pressure head loss in twin-chamber tubing (fig. 7–15) occurs in the inner orifice. The q of twin-chamber tubing can be computed by equation 7–24.

$$q = 187ac_q\sqrt{2g(h - h^1)} \qquad \textbf{(7–24)}$$

Where

- h = working pressure head of the inner main chamber, feet.
- h^1 = working pressure head of the secondary chamber, feet.

Normally, the main and secondary chambers of twin-chamber tubing are the same diameter, and there are three to six orifices in the secondary chamber for each orifice in the main chamber. The h^1 of the secondary chamber can be computed by equation 7–25.

$$h^1 = \frac{h}{1 + m^2} \qquad \textbf{(7–25)}$$

Where

- m = number of orifices in the secondary chamber per orifice in the main chamber.

Vortex Emitters and Sprayers

The vortex emitter or sprayer has an orifice containing a circular cell that causes vortical flow. The entrance of the water tangent to the inner wall causes the water to rotate rapidly, resulting in a vortex in the center of the cell. Consequently, both the resistance of the flow and the head loss are greater in the vortex emitter than in a simple orifice of the same diameter. Vortex emitters can be constructed to give an approximate discharge (q), gallons per hour, that can be computed by equation 7–26.

$$q = 187ac_q\sqrt{2g}\, h^{0.4} \qquad \textbf{(7–26)}$$

Where

- a = flow cross section, square inches.
- c_q = coefficient for characteristics of the orifice; about 0.4.
- g = acceleration of gravity (32.2 ft/s²).
- h = working pressure head of emitter, feet.

The c_q value of about 0.4 gives a discharge of about one-third of the flow of a simple orifice of the same diameter. Therefore, for the same discharge and pressure head, the entrance diameter of a vortex emitter can be about $\sqrt{3}$, or 1.73, times larger than that of a simple-orifice emitter.

Compensating Emitters

Compensating emitters (fig. 7–16) are constructed to yield a nearly constant discharge over a wide

range of pressures. Both long-path or short-path and orifice-type compensating emitters are available. Orifice and tube diameters at each given pressure should be computed as shown, but the diameters change with pressure. A peculiar problem of compensating emitters is that the resilient material may distort over a period of time and gradually squeeze off the flow, even though pressure remains constant. The emitter discharge (q), gallons per hour, can be computed by equation 7–27 for orifice and short-tube compensating emitters.

$$q = 187ac_q\sqrt{2g}\,h^x \qquad \textbf{(7–27)}$$

Where

- a = flow cross section, square inches.
- c_q = coefficient for characteristics of the emitter.
- g = acceleration of gravity (32.2 ft/s²).
- h = working pressure head of the emitter, feet.
- x = discharge exponent; varies from 0.5 to 0.0, depending on the characteristics of the flow section and the resilient material used.

Flushing Emitters

There are two types of self-flushing emitters, on-off flushing and continuous flushing. On-off-flushing emitters (fig. 7–16) flush for only a few moments each time the system starts operating, then shut off. This behavior is typical of the compensating type.

Continuous-flushing emitters are constructed so that they can eject relatively large particles during operation by using a series of relatively large-diameter flexible orifices to dissipate pressure. As shown in figure 7–26, particles larger than the orifice diameter are ejected by localized pressure buildup as they reach each flexible orifice.

In continuous-flushing emitters, the orifice is sensitive to pressure changes and the orifice material is sensitive to temperature. For emitters with flexible orifices that tend to expand under pressure, an approximate discharge (q), gallons per hour, can be computed by equation 7–28.

$$q = 187ac_q\sqrt{2g}\,(h/m')^{0.7} \qquad \textbf{(7–28)}$$

Where

- a = flow cross section area, square inches.
- c_q = coefficient that depends on the characteristics of the orifice; ranges from 0.6 to 1.0.
- g = acceleration of gravity (32.2 ft/s²).
- h = working pressure head of the emitter, feet.
- m′ = the number of orifices in series in the emitter.

For continuous-flushing emitters that have a series of rigid orifices, q can be computed by equation 7–29.

$$q = 187ac_q\sqrt{2gh/m'} \qquad \textbf{(7–29)}$$

Emitter Operating Characteristics

Discharge

The recommended operating range and the relationship between average emitter discharge (q_a) and pressure should be available from the emitter's manufacturer. Often emitter sizes are given in terms of a rated average discharge at some standard pressure head along with a discharge exponent.

The first step in determining the volume of the emitter discharge is to select an emitter that has a rated discharge (or the discharge at the midpoint of

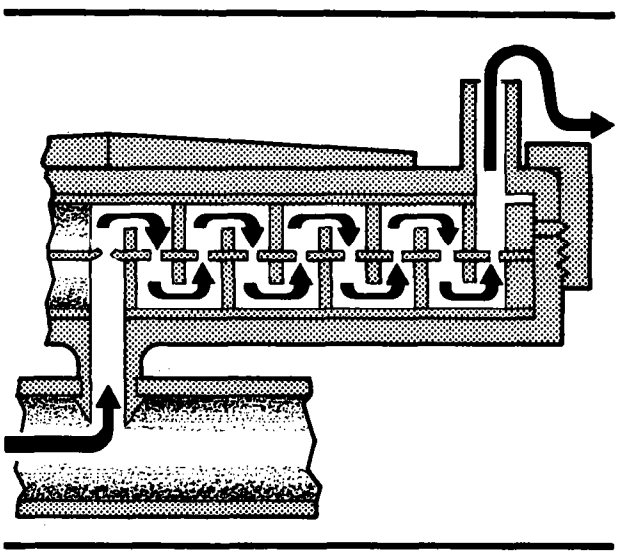

Figure 7–26.—Cross section of a continuous-flushing emitter.

the recommended range) that appears to be appropriate for the system. The q_a should be large enough to supply the crop needs during the period of peak use when operating about 20 hr per day, but small enough so that it does not cause runoff.

Let q_a be equal to the rated discharge of the selected trial emitter, gallons per hour. The time of application (T_a), hours per day, for the gross volume of water required per plant during the peak use period can be computed by equation 7–30.

$$T_a = \frac{F_{(gp/d)}}{eq_a} \qquad (7\text{–}30)$$

Where

$F_{(gp/d)}$ = gross volume of water required per plant per day during the peak use period, gallons per day.

e = number of emitters per plant.

The maximum number of hours of operation per day should not exceed 90 percent of the available time (i.e., 21.6 hr/day). The nonoperation time is a margin of safety for system failure or other unexpected down time. It may be necessary to analyze the system by number of stations (N) to apply water within 21.6 hr/day (fig. 7–27). To determine N, select a reasonable T_a, between 12 and 21.6 hr/day, and compute a new q_a.

When the preliminary value of T_a computed by equation 7–30 is greater than 21.6 hr/day (even for a single-station system), the emitter discharge would need to be increased above the rated discharge. If the increased discharge exceeds the recommended range or requires too much pressure, either larger emitters or more emitters per plant are required. Examples of decision strategies for other preliminary T_a values are:

1. If $T_a \cong 21.6$ hr/day, use a one-station system (N = 1), select $T_a \leq 21.6$ hr/day, and adjust q_a accordingly.
2. If $T_a \cong 10.8$ hr/day, use N = 2, select $T_a \leq 10.8$, and adjust q_a accordingly.
3. If $12 < T_a < 18$, it may be desirable to use another emitter or a different number of emitters per plant to enable operating closer to 90 percent of the time and thereby reduce investment costs.

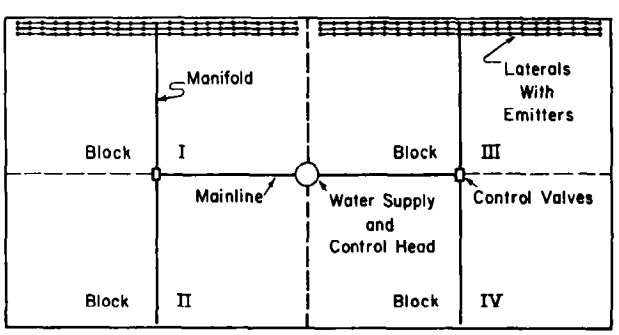

Figure 7–27.—Typical two-station split-flow layout for trickle irrigation system with Blocks I and III, or II and IV, operating simultaneously.

Average Pressure

Normally, published data for the emitter are a series of pressure heads vs. discharges. For determining the average emitter pressure head (h_a), feet, for a desired average discharge (q_a), gallons per hour, the basic emitter discharge equation needs to be modified. The h_a for a given discharge can be computed by equation 7–31.

$$h_a = \left(\frac{q_a}{k_d}\right)^{1/x} \qquad (7\text{–}31)$$

Where

k_d = constant of proportionality (discharge coefficient) that characterizes each emitter.

x = emitter discharge exponent.

Emission Uniformity

Emission uniformity (EU) from all the emission points within a trickle irrigation system is important because it is one of the major components of irrigation efficiency. From field test data EU, percent, can be computed by equation 7–32.

$$EU = 100\, q_n'/q_a' \qquad (7\text{–}32)$$

Where

q_n' = average discharge of the lowest 25 percent of the field-data discharge readings, gallons per hour.

q_a' = average of all the field-data emitter discharges, gallons per hour.

In the design phase, the variation expected in emission rates must be estimated by some analyti-

cal procedure. Unfortunately, it is not practical to consider in a formula for EU all the influencing factors, such as full or partial clogging, changes in water temperature, and aging of emitters. It is not possible to look at a design and compute or even satisfactorily estimate the unpredictable variations in emission rates these factors may cause. Other items, however, can be known. The manufacturer should provide information about the relation of pressure to rate of emission and also about manufacturing variation for the emitter. Topographic data from the intended site and a hydraulic analysis of the proposed pipe network can give the needed information about expected variation in pressure.

The basic concept and formulas for EU were initially published in studies by Keller and Karmeli.[3] The basis of their formula is the ratio of the lowest emission rate to the average emission rate. This process treats below-average emission rates as more important than those above average and treats the lowest emission rates as more important than those somewhat below average. This scheme seems reasonable for evaluating trickle irrigation, which applies reduced amounts of water to the plant and irrigates only a part of the plant's root zone. In trickle irrigation, underwatering is a greater hazard than overwatering.

For a proposed design, an estimate of EU can be computed by equation 7–33a or 7–33b:

$$EU = 100(1.0 - 1.27\frac{v}{\sqrt{e'}})\frac{q_n}{q_a} \qquad \textbf{(7–33a)}$$

$$EU = 100(1.0 - 1.27v_s)\frac{q_n}{q_a} \qquad \textbf{(7–33b)}$$

Where

- v = coefficient of manufacturing variation of the emitter, obtained from the manufacturer or by equation 7–18.
- v_s = system coefficient of manufacturing variation (eq. 7–19).
- e' = minimum number of emitters per plant.
- q_n = minimum emission rate computed from the minimum pressure in the system, based on the nominal flow rate-vs.-pressure curve, gallons per hour.
- q_a = average or design emission rate, gallons per hour.

The ratio of q_n to q_a expresses the relationship of minimum to average emission rate that results from pressure variation within the system. The 100 is needed to convert the ratio to a percentage. The factor in the middle adjusts for the additional nonuniformity caused by anticipated manufacturing variation between individual emitters.

Allowable Pressure-Head Variation

The allowable pressure-head variation ($\triangle H_s$) is the pressure-head variation between emitters in a subunit that will give the design emission uniformity (EU). The subunit may be the manifold and attached laterals, a group of laterals, or a single lateral, depending on where the pressure is regulated. Figure 7–28 is a schematic of the pressure-head distribution in a simple subunit. Figure 7–29 shows an example of the combined effect of pressure-head and manufacturing variations on individual emitter discharges. The particular example depicted is for a subunit on a level field with constant-diameter manifolds and laterals in which $\triangle H_s$ = 10 ft when the pressure head (h_a) that gives the average or design emitter discharge rate (q_a) is 40 ft. This gives a subunit head-loss ratio of 0.25. The emitter characteristics are q_a = 0.91 gph, emission discharge coefficient (x) = 0.72, and manufacturer's coefficient of variation (v) = 0.033.

In figure 7–29 the region of emitter discharges is bounded on the sides by the minimum and maximum pressures in the subunit. The bottom and top of the region are bounded by the minimum and maximum discharge expected from a test sample of emitters at each possible operating pressure. The $\triangle H_s$ in the subunit on a level field is caused by the friction loss. The h_a, which gives the q_a, is not midway between the extremes of pressure, because loss of pressure is greatest in the first part of constant-diameter manifolds and laterals.

The uniformity of amounts of water emitted throughout a subunit is determined by the EU, because all the emitters are operated for the same application time (T_a). Selecting the ideal design EU requires economic trade-offs. Four factors must be considered: (1) cost required to install systems with increased EU; (2) water and water-related costs; (3) sensitivity of crop yield and quality to non-

[3]Keller, J., and Karmeli, D. 1975. Trickle irrigation design. Rainbird Sprinkler Mfg. Corp., Glendora, Calif., 133 pp.

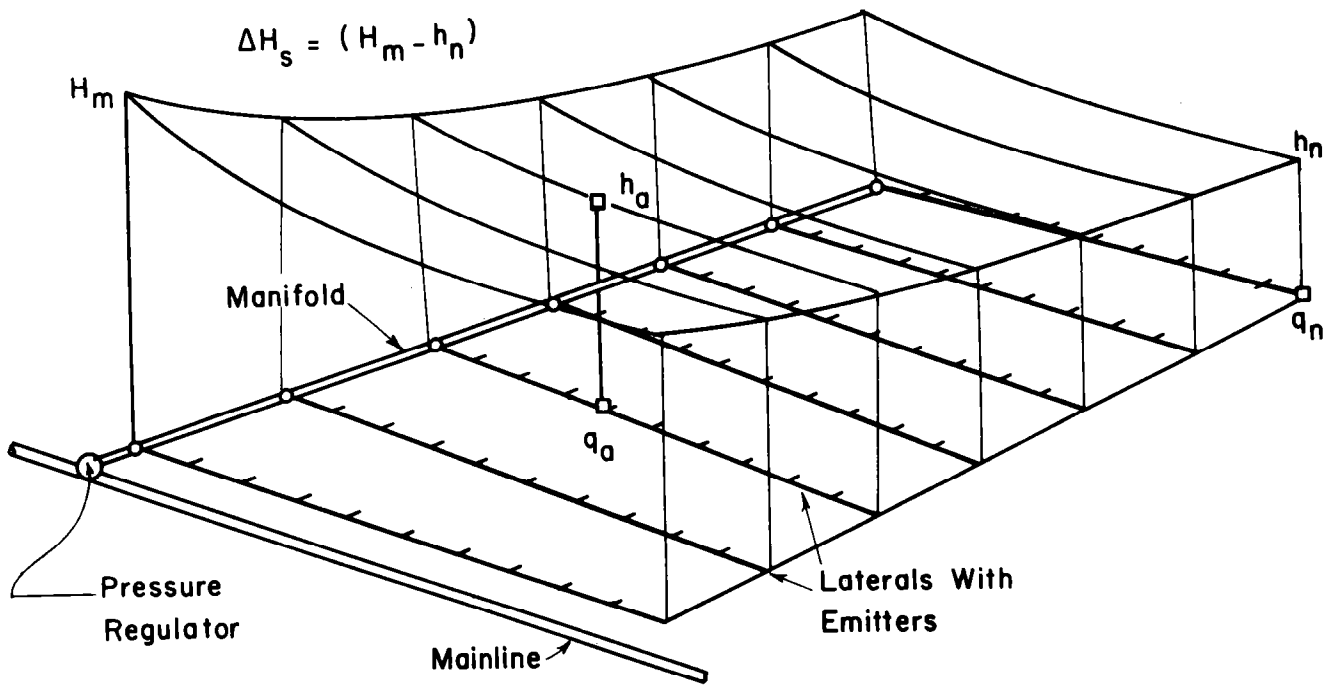

Figure 7-28.—Distribution of a pressure head in a subunit. ΔH_s = allowable pressure-head variation; H_m = manifold inlet pressure head; h_n = pressure head that gives the q_n required to satisfy the design emission uniformity; h_a = pressure head that gives the q_a; q_a = average or design emitter discharge rate; q_n = minimum emitter discharge.

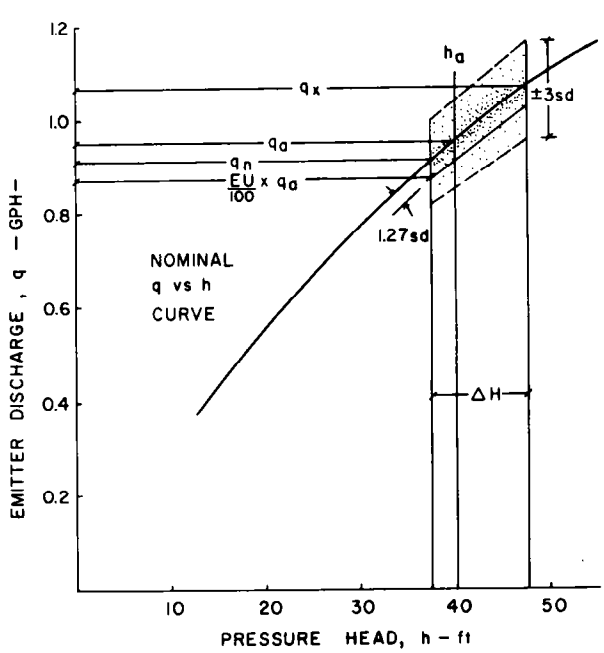

Figure 7-29.—Combined effect of pressure-head and manufacturing variations on discharges of individual emitters. h_a = pressure head that gives the average or design emitter discharge rate; sd = standard deviation; q_x = largest flow rate; q_a = average or design emitter discharge rate; q_n = minimum emitter discharge rate; EU = emission uniformity.

uniform irrigation; and (4) market values of the crop. An economic analysis of these factors can determine the optimal EU in any specific situation, but usually data are insufficient for such an analysis. For design purposes, the recommended ranges of EU values to use in conjunction with equation 7-33 are as follows:

1. For emitters in widely spaced permanent crops with:
   a. uniform topography, 90-94
   b. steep or undulating topography, 88-92
2. For emitters in closely spaced (<6 ft) permanent and semipermanent crops with:
   a. uniform topography, 86-90
   b. steep or undulating topography, 84-90
3. For line-source tubing on annual row crops with:
   a. uniform topography, 80-90
   b. steep or undulating topography, 70-85

The minimum emitter discharge that will satisfy the desired EU value (q_n) can be determined by solving equation 7-33 for q_n, i.e., using the q_a determined from equation 7-30 and the system coefficient of manufacturing variation (v_s) for the selected emitter and layout.

The pressure head that gives q_n for the selected emitter (h_n), feet, can be determined from equation 7–20. From h_a and h_n the $\triangle H_s$, feet, can be computed for design purposes by equation 7–34.

$$\triangle H_s = 2.5(h_a - h_n) \qquad \textbf{(7–34)}$$

Where

h_a = pressure head that will give the q_a required to satisfy equation 7–30, feet.
h_n = pressure head that will give the q_n required to satisfy equation 7–33 with the design EU, feet.

Maintaining the design EU requires keeping the pressure head between h_n and ($h_n + \triangle H_s$) while differentials in both pipe friction and elevation are included. If the calculated $\triangle H_s$ is too small for economic design purposes, the options are to (1) select another emitter that has a lower coefficient of manufacturing variation (v), discharge exponent (x), or both; (2) increase the number of emitters per plant (e); (3) use a different emitter or rearrange the system to get a higher h_a; or (4) relax the design EU requirement.

Total System Capacity

Knowledge of the total system capacity (Q_s), gallons per minute, is necessary to design an economical and efficient pumping plant and pipeline network. The system capacity for any emitter layout can be computed by equations 7–35a and 7–35b.

$$Q_s = 726 \frac{A}{N} \frac{eq_a}{S_p S_r} \qquad \textbf{(7–35a)}$$

Where

A = field area, acres.
e = number of emitters per plant.
N = number of operating stations.
q_a = average or design emission rate, gallons per hour.
S_p = plant spacing in the row, feet.
S_r = distance between plant rows, feet.

For uniformly spaced laterals that supply uniformly spaced emitters:

$$Q_s = 726 \frac{A}{N} \frac{q_a}{S_e S_l} \qquad \textbf{(7–35b)}$$

Where

S_e = spacing between emitters on a lateral, feet.
S_l = spacing between laterals, feet.

For computing total system capacity where line-source tubing is used and the discharge rate is per 100 ft of tubing, equation 7–36 can be used.

$$Q_s = 726 \frac{A}{N} \frac{e}{S_p} q_a \qquad \textbf{(7–36)}$$

Where

q_a = (q_a per 100 ft of tubing)/100.

Pump Operating Time per Season

The pump operating time per season (Q_t), hours, can be estimated by equation 7–37 with the gross seasonal volume (V_i), acre-feet, computed by equation 7–14 and the total system capacity (Q_s), gallons per minute.

$$Q_t = 5{,}430 \frac{V_i}{Q_s} \qquad \textbf{(7–37)}$$

Some systems require extra capacity because of anticipated slow changes in average emitter discharge (q_a) with time. Decreases in q_a can result from slow clogging from sedimentation in long-path emitters or compression of resilient parts in compensating emitters. Increases in q_a can result from mechanical or chemical fatigue of the flexible orifices in continuous- and periodic-flushing emitters or increases in minor leakage from fatigue in emitters and tubing.

Both decreases and increases in q_a necessitate periodic cleaning or replacement of emitters. A decrease in discharge rate can be compensated for by operating the system either at a higher pressure or for a longer time during each irrigation application. The need for frequent cleaning or replacement of emitters because of decreasing discharge rates can be prevented by designing the system with 10 to 20 percent extra capacity. By following the recommended design procedure, based on a maxi-

mum operation time of 21.6 hr/day during the peak use period, 10 percent extra capacity is already available. A possible alternative is to provide enough reserve operating pressure so that the pressure can be increased as required to hold q_a constant until the emitter discharge characteristics have degenerated by 10 to 20 percent.

Providing extra system capacity necessitates increasing the pump and pipe size, whereas providing reserve operating pressure requires only a slightly larger pump. Consequently, the cost of providing reserve pressure is less then the cost of providing extra capacity. Nonetheless, systems that have extra capacity can better make up for unavoidable interruptions before the emitter discharge has decreased. Furthermore, they can also handle situations when minor leakage increases q_a.

Net Water-Application Rate

The net water-application rate (F_n), inches per hour, is the water applied to the plants at the lowest discharge rate of the emission device. The application rate is important in irrigation scheduling because it is needed to calculate the number of hours that the system must operate to apply a specific volume of water.

The F_n is a function of the minimum expected rate of emitter discharge (q_n), gallons per hour, and thus cannot be computed until the hydraulic network has been designed. The q_n is a function of the minimum expected pressure head (h_n), feet, in the system and can be computed by equation 7–38.

$$q_n = q_a \left(\frac{h_n}{h_a}\right)^x \qquad \textbf{(7–38)}$$

Where

q_a = average emitter discharge, gallons per hour.
h_a = average pressure head of emitter, feet.
x = emitter discharge exponent.

If the friction head loss in a trickle irrigation system is greater than the head gain from elevation drops, h_n can be computed by equation 7–39.

$$h_n = (H_m - \triangle H_m - \triangle h) \qquad \textbf{(7–39)}$$

Where

H_m = manifold inlet pressure head, feet.
$\triangle H_m$ = difference in pressure head along the manifold, feet.
$\triangle h$ = difference in pressure head along the lateral, feet.

Steep downhill manifolds and laterals in which the friction loss is less than the head gain from elevation drops will have lower pressures at the inlet than further down the line. In such cases, h_n must be determined by inspection of the graphical solutions.

With an estimated q_n and the final design emission uniformity (EU), the F_n can be computed by equation 7–40.

$$F_n = 1.604 \frac{EU}{100} \frac{eq_a}{S_p S_r} \qquad \textbf{(7–40)}$$

Where

e = number of emitters per plant.
S_p = distance between plants in the row, feet.
S_r = distance between plant rows, feet.

The maximum daily net water application that the system can apply in an emergency is 24 hr $\times$ F_n.

Computing Injection of Fertilizer and Chemicals

The rate at which any concentration of chemical is to be injected into the irrigation water should be calculated carefully.

The rate of injecting fertilizer into the system (q_f), gallons per hour, depends on the concentration of the liquid fertilizer and the quantity of nutrients to be applied during the irrigation. The rate can be computed by equation 7–41.

$$q_f = \frac{F_r A}{H F_c H_r} \qquad \textbf{(7–41)}$$

Where

F_r = fertilizer rate (quantity of nutrients to be applied per irrigation cycle), pounds per acre.

H = time of irrigating per irrigation cycle, hours.
A = area irrigated per irrigation cycle, acres.
H_r = ratio between hours of fertilizing and hours of irrigating per irrigation cycle.
F_c = concentration of nutrients in the liquid fertilizer, pounds per gallon.

Capacity of the fertilizer tanks.—The capacity of the fertilizer tanks is an important consideration. Large, low-cost tanks are practical for use with injection pumps. A large tank is a good place to store fertilizer for periods when supply is short, and its use reduces the labor associated with frequent filling. If a large tank is being used, shutoff is a convenient way to control the amount of fertilizer injected.

For a pressure-differential injection system, a high-pressure fertilizer tank should hold enough for a complete application. Required tank capacity (C_t), gallons, can be computed by equation 7–42.

$$C_t = \frac{F_r A}{F_c} \qquad (7\text{–}42)$$

Where

F_r = fertilizer rate (quantity of nutrients to be applied per irrigation cycle), pounds per acre.
A = area irrigated per irrigation cycle, acres.
F_c = concentration of nutrients in the liquid fertilizer, pounds per gallon.

Rate of injecting chlorine or acid.—The rate of injecting chlorine or acid depends on the system's flow rate. Liquid chlorinators are usually preferred over gas chlorinators because:

1.. A gas chlorinator is used for chlorination only, whereas a positive displacement pump can inject not only liquid chlorine and fertilizers, but also micronutrients, fungicides, herbicides, acids, and other liquids as needed.

2. A gas chlorinator usually costs 4 to 10 times as much as a pump.

3. Because chlorine gas is extremely hazardous, it is expected that, for installing a gas chlorinator, the Occupational Safety and Health Administration (OSHA), will require the use of a separate building and special handling of the gas cylinders.

4. Most manufacturers of trickle irrigation hardware make filtration equipment and provide the chemical solution tanks and chemical injection systems as part of their systems for filtration, water treatment, and chemical feeding.

The rate of injecting a chemical such as chlorine or acid (q_c), gallons per hour, can be calculated by equation 7–43.

$$q_c = \frac{0.006CQ_s}{csg} \qquad (7\text{–}43)$$

Where

C = desired dosage, parts per million.
Q_s = irrigation system capacity, gallons per minute.
c = concentration of the desired component in liquid chemical concentrate, percent.
sg = specific gravity of the chemical concentrate.

Pipeline Hydraulics

This section contains data and information about the hydraulic aspects of pipe systems important in the design of trickle irrigation systems. For more general information on the subject, refer to Section 5, Hydraulics, of this National Engineering Handbook.

Friction Loss in Pipelines

Plastic is the predominant pipe material used for trickle irrigation laterals, manifolds, and main lines. The Hazen-Williams formula is the basis for many friction-loss calculations. Equation 7–44 can be used to calculate the head loss gradient (J), feet per 100 feet, by the Hazen-Williams formula.

$$J = \frac{h_f 100}{L} = 1{,}050 \frac{\left(\frac{Q}{C}\right)^{1.85}}{D^{4.87}} \qquad (7\text{–}44)$$

Where

h_f = head loss from pipe friction, feet.
L = pipe length, feet.
Q = flow rate in the pipe, gallons per minute.
C = friction coefficient for continuous sections of pipe.
D = ID of the pipe, inches.

Typically, C = 150 has been used to calculate friction losses in plastic pipe. The inner surface of plastic pipe is very smooth, and the C value of 150 is recommended for smooth pipes in Hazen-Williams tables.

The Hazen-Williams formula was developed from study of water distribution systems that used 3-in. or larger diameter pipes and discharges greater than 50 gpm. Under these flow conditions, the Reynolds number (N_R) is greater than 5×10^4, and the formula predicts friction loss satisfactorily.

However, for the smaller pipe, such as the typical ½-in. lateral hoses used in trickle irrigation systems, the Hazen-Williams formula with C = 150 underestimates the friction losses by about 30 percent. This phenomenon is demonstrated by figure 7–30, which shows laboratory test results for plain ½-in. trickle hose (0.58-in. ID) superimposed on the Moody diagram. The N_R for 70°F water flowing through a pipe can be computed by equation 7–45.

$$N_R = 3{,}214 \frac{Q}{D} \qquad \textbf{(7–45)}$$

The Darcy-Weisbach friction factor (f) in the Moody diagram is related to h_f by the Darcy-Weisbach formula, equation 7–46.

$$h_f = f \frac{L}{D} \frac{v^2}{2g} \qquad \textbf{(7–46)}$$

Where

v = velocity of flow in the pipe, feet per second.

g = acceleration of gravity (32.2 ft/s²).

The "smooth pipe" line on the Moody diagram is generally considered the ultimate in pipe smoothness. For comparison, the "equivalent" f values for Hazen-Williams C values of 130, 140, and 150 are plotted on figure 7–30. The position of the C-value lines clearly shows a discrepancy in the "smooth pipe" concept in this range of Reynolds numbers. The C = 150 line, which represents Hazen-Williams smooth pipes, is well below the friction factor of

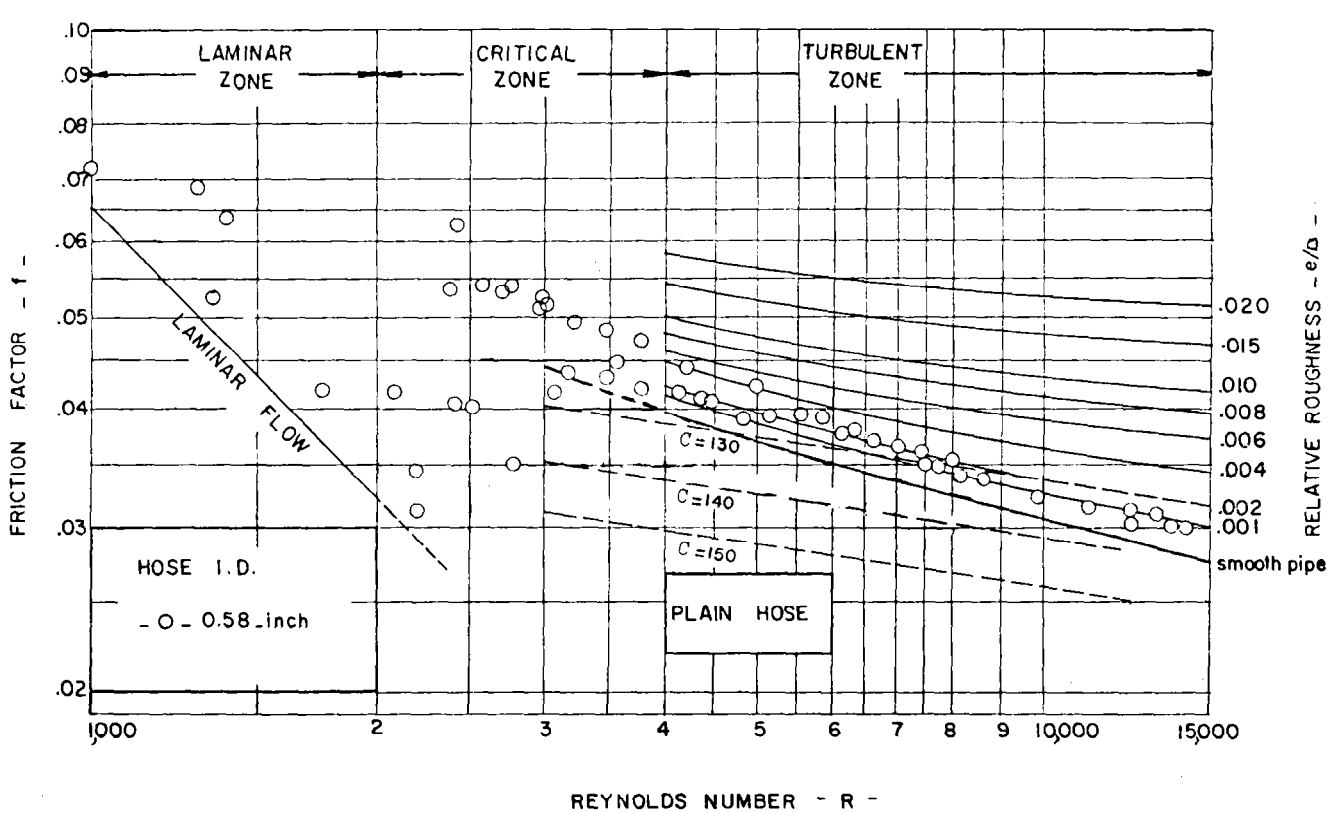

Figure 7–30.—Darcy-Weisbach f values for 1/2-in. (0.58-in. inside diameter) trickle irrigation hose.

Darcy-Weisbach smooth pipes. The range of Reynolds numbers shown represents hose discharge rates between 0.2 gpm and 3.0 gpm for ½-in. hose. The ½-in. hose exhibits characteristics somewhat above the Moody "smooth pipe" line and equivalent to an average C value of about 130. Note that the data points fall on lines generally parallel to the lines on the Moody diagram rather than on constant C-value lines. This observation strongly supports the conclusion that the Darcy-Weisbach formula represents the friction losses in hoses better than does the Hazen-Williams formula.

Pipe friction loss tables.—Tables of friction loss encountered in the common sizes of lateral hose and PVC thermoplastic pipe used for trickle irrigation systems are presented in Appendix B. These tables of pipe friction loss are based on the Darcy-Weisbach formulas and assume smooth pipe. The need for time-consuming interpolation is reduced by using small flow increments. The PVC pipes presented are for the lowest standard dimension ratio (SDR) (or pressure rating) iron pipe sizes (IPS) presented in the SCS standard for "Irrigation Water Conveyance Pipeline."[4] The friction tables were developed by computer, using equations 7–47a and 7–47b to compute f.

For $N_R < 2{,}000$:

$$f = \frac{64}{N_R} \qquad \textbf{(7–47a)}$$

and for $N_R \geq 2{,}000$:

$$\frac{1}{\sqrt{f}} = 0.80 + 2.0 \log (N_R\sqrt{f}) \qquad \textbf{(7–47b)}$$

Friction loss computations.—Equation 7–47b is quite tedious to use for desk computation of friction losses. The Blasius formula (equation 7–48), accounts for the low range in N_R in trickle irrigation systems. Equation 7–48 can be used for computing friction losses for N_R between 2,000 and 100,000.

$$f = 0.32\, N_R^{-0.25} \qquad \textbf{(7–48)}$$

The computation of J may be simplified by combining equation 7–45, 7–46, and 7–48 and adjusting the constant for average conditions. Equation 7–49a can be used to compute J for 5-in.-diameter or smaller plastic pipes and hoses. For D < 5 in.:

$$J = \frac{h_f 100}{L} = 0.133 \frac{Q^{1.75}}{D^{4.75}} \qquad \textbf{(7–49a)}$$

Equation 7–49b can be used to compute J for larger diameter plastic pipe. For D > 5 in.:

$$J = \frac{h_f 100}{L} = 0.100 \frac{Q^{1.83}}{D^{4.83}} \qquad \textbf{(7–49b)}$$

Equations 7–49a and 7–49b are as easy to use as the Hazen-Williams formula, and they more accurately predict friction loss for 70°F water flowing in smooth plastic pipe.

Head Losses Through Fittings

Equation 7–49 is developed for smooth plastic pipe without fittings. The three conventional methods for computing the additional pressure-head losses from special equipment, valves, and pipe and fittings are: (1) graphing friction loss vs. flow rate, (2) expressing the added pressure-head loss as the length of pipe (of the same diameter) that would give the same loss, and (3) expressing the loss in terms of a velocity head coefficient. Equation 7–50 can be used for computing friction head loss caused by a specific fitting (h_e), feet.

$$h_e = K_f \frac{V^2}{2g} \qquad \textbf{(7–50)}$$

Where

K_f = friction head-loss coefficient for a specific fitting.

$V^2/2g$ = velocity head, which is the energy head from the velocity of flow, feet.

Graphs, equivalent lengths, or K_f values should be supplied by manufacturers or taken from handbooks on hydraulics. Usually the losses attributed to standard pipe fittings are small and can be grouped in a miscellaneous friction-loss safety factor as shown under Samples of Trickle Irrigation System Designs, Drip System.

Emitter-connection loss equivalent lengths (f_e), feet, representing losses for different barb sizes and lateral diameters are shown in figure 7–23, which

[4]Soil Conservation Service, U.S. Dep. Agric. 1977–81. National Handbook of Conservation Practices.

should be used when the manufacturer does not provide emitter-connection loss data. For computing the friction head loss, the equivalent length of the lateral with emitters (l'), feet, can be computed by equation 7–51a and substituted for the actual length of the lateral with emitters (l), feet.

$$l' = l\left(\frac{S_e + f_e}{S_e}\right) \qquad \textbf{(7–51a)}$$

Where

S_e = spacing between emitters on the lateral, feet.

In graphic analysis of lateral head loss, increasing the equivalent head-loss gradient of the lateral with emitters (J') is a convenient way to account for the emitter connection roughness, and J', feet per 100 feet, can be computed by equation 7–51b.

$$J' = J\left(\frac{S_e + f_e}{S_e}\right) \qquad \textbf{(7–51b)}$$

Where

J = head loss gradient of the lateral with emitters, feet per 100 feet.

Multiple-Outlet Pipeline Losses

Head loss from pipe friction (h_f) in laterals and manifolds that have evenly spaced outlets and uniform discharge from each outlet can be estimated by equation 7–52.

$$h_f = J'FL/100 \qquad \textbf{(7–52)}$$

Where

J' = equivalent head-loss gradient of the lateral with emitters, feet per 100 feet.
F = reduction coefficient to compensate for the discharge along the pipe.
L = pipe length, feet.

Table 7–6 gives F values for various numbers of openings along the pipe. The F values are given for use with both the Hazen-Williams formula (flow rate exponent 1.85) and the Darcy-Weisbach tables or equation 7–49a (flow rate exponent 1.75). The F values were computed by dividing the actual computed loss in multiple-outlet pipelines (with equal discharge per outlet) by the head loss in pipelines of equal diameter and length but with only one outlet.

Dimensionless Pipe-Friction Curve

The head loss along any multiple outlet pipeline that has uniform outlet spacing and discharge can be represented by a single line as a dimensionless plot. Figure 7–31 shows such a plot when the horizontal scale is a dimensionless ratio of any position (x), feet, along the length divided by the total length of the multiple-outlet pipeline (L), feet. The vertical axis represents the head loss from pipe friction (h_f), feet, divided by L/100. This general friction curve can be adapted to a specific problem by setting the intercept of the friction curve (at x/L = 1.0) equal to J'F for a specific lateral or manifold pipe diameter, flow rate, number of outlets, and length.

Table 7–6.—Reduction coefficient (F) for multiple-outlet pipeline friction-loss computations in which the first outlet is a full spacing from the pipe inlet

Number of outlets	F		Number of outlets	F	
	1.85[1]	1.75[2]		1.85[1]	1.75[2]
1	1.00	1.00	9	0.41	0.42
2	0.64	0.65	10–11	0.40	0.41
3	0.54	0.55	12–15	0.39	0.40
4	0.49	0.50	16–20	0.38	0.39
5	0.46	0.47	21–30	0.37	0.38
6	0.44	0.45	31–70	0.36	0.37
7	0.43	0.44	>70	0.36	0.36
8	0.42	0.43			

[1]The flow rate exponent of 1.85 is for use with the Hazen-Williams formula.
[2]The flow rate exponent of 1.75 is for use with tables based on the Darcy-Weisbach equation and smooth-pipe curve on the Moody diagram or with equation 7–49a.

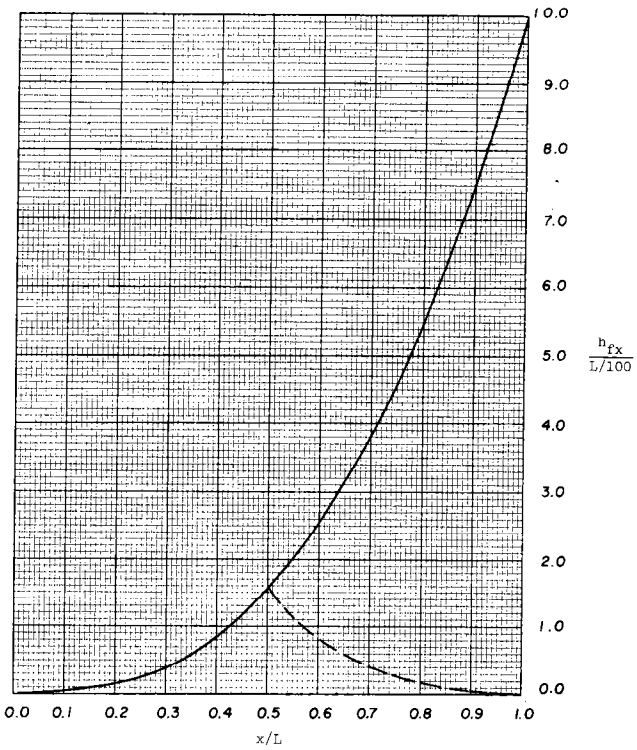

Figure 7–31.—General friction curve for a multioutlet pipeline that has uniform diameter, uniform spacing between outlets, and uniform flow per outlet. X = any position along the length, feet; L = total length, feet; h_{fx} = head loss from position x to the closed end, feet.

The shape of the general friction curve can be plotted from an outlet-by-outlet analysis of a typical multiple-outlet line. It can also be determined mathematically by equation 7–53.

$$\frac{h_{fx}}{L/100} = J'F\left(\frac{x}{L}\right)^{2.75} \qquad \textbf{(7–53)}$$

Where

h_{fx} = head loss from position x to the closed end, feet.
J' = equivalent head-loss gradient of the pipe with emitters, feet per 100 feet.
F = reduction coefficient to compensate for the discharge along the pipe.
x = distance from the closed end, feet.

Equation 7–53 can be derived mathematically by first combining equations 7–49a, 7–51b, and 7–52 to obtain:

$$h_f = \frac{L}{100} F \left(\frac{S_e + f_e}{S_e}\right) 0.133 \frac{Q^{1.75}}{D^{4.75}}$$

Where

h_f = head loss from pipe friction, feet.
S_e = spacing between emitters on a lateral, feet.
f_e = emitter-connection loss equivalent length, feet.
Q = flow rate in the pipe, gallons per minute.
D = ID of the pipe, inches.

Then L is replaced with x and Q with Qx/L to obtain the h_{fx} at any point x from the closed end, and both sides are divided by L to obtain the dimensionless expression:

$$\frac{100h_{fx}}{L} = \frac{x}{L} F \left(\frac{S_e + f_e}{S_e}\right) 0.133 \frac{[(x/L)Q]^{1.75}}{D^{4.75}}$$

Equation 7–53 can now be obtained by combining terms and noting that:

$$J' = \frac{S_e + f_e}{S_e} 0.133 \frac{Q^{1.75}}{D^{4.75}}$$

The mathematical derivation of equation 7–53 assumes that F is a constant between the end and any point in the multiple-outlet pipeline. This assumption is obviously not true, but on pipelines that have 12 or more outlets the error is less than 5 percent.

Equation 7–53 can also be derived graphically from a plot of x/L vs. $h_{fx}/(L/100)$ data obtained from an outlet-by-outlet analysis of a multiple-outlet pipeline. Table 7–7 gives a set of data developed from a hydraulic analysis of multiple-outlet pipeline. The dimensionless friction-loss values have been adjusted so that 100 H_{fx}/L = 10.00 at x/L = 1.0. These data are useful for plotting curves such as figure 7–31 with different scales.

Economic Pipe-Size Selection

The economics of trickle irrigation is very important to management in modern agriculture. The essence of economic selection of pipe size for a main line is to find the minimum sum of fixed costs plus operating costs on either a present-worth or an an-

Table 7-7.—Dimensionless data for plotting friction curves for multiple-outlet pipelines[1]

x/L	100 h_{fx}/L	x/L	100 h_{fx}/L
0.10	0.02	0.60	2.45
0.20	0.13	0.65	3.05
0.25	0.23	0.70	3.74
0.30	0.37	0.75	4.52
0.35	0.57	0.80	5.40
0.40	0.81	0.85	6.38
0.45	1.12	0.90	7.47
0.50	1.49	0.95	8.68
0.55	1.93	1.00	10.00

[1]x = distance from the closed end, feet; L = length of the multiple-outlet pipeline, feet; h_{fx} = head loss from position x to the closed end, feet.

nual basis as presented pictorially in figure 7-32. Usually it is sufficient to represent this sum by the cost of the pipe in place and the energy cost (in terms of the fuel required by the pumping plant) of pressure lost in pipe friction.

Although the selection of economical pipe sizes is an important engineering decision, it is often given insufficient attention, especially in designing relatively simple irrigation systems, because the methods of selection are considered too time consuming, limited, or complex. The economic pipe-size selection chart (fig. 7-33) was developed to simplify the pipe-sizing process for manifolds and main lines for PVC pipe with lowest SDR (or pressure rating) IPS pipe sizes.

Life-Expectancy Costs

To determine the most economical life-expectancy cost of a system, find the minimum fixed-plus-operating costs. Visualize the problem by thinking of selecting the diameter of a water supply line. If a very small pipe is used the initial cost will be low, but the operating (energy-for-power) cost for overcoming friction losses in the pipe will be large. As the pipe diameter increases, the fixed costs increase, but the power costs decrease. The optimum pipe size, where the sum of the fixed costs plus power costs is at a minimum, is illustrated in figure 7-32.

The concept of value engineering represented by figure 7-32 can be used for the life-expectancy costs of more complex systems by taking into account all of the potential fixed costs such as various types of basic hardware, land preparation, mechanical additions, and automation. These fixed costs can then be added to the full set of operating costs, including energy, labor, maintenance, and management.

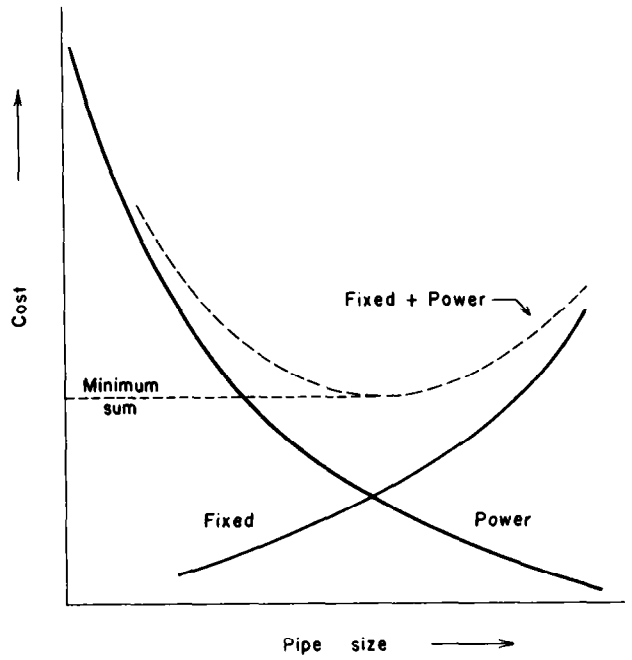

Figure 7-32.—Influence of pipe size on fixed, power, and total costs.

The life-expectancy cost can be analyzed on a capital value or on an annual value. In either analysis the interest rate (i), the expected life of the item (n), and the estimated annual rate of increase in energy costs (r) must be considered. Table 7-8 lists the necessary factors for either a present-worth or an annual life-expectancy cost analysis, assuming a 9-percent annual rise in energy costs, for 10- to 25-percent interest rates and 7- to 40-year life expectancies.

The present worth factor of the rising energy cost [PW(r)] and the equivalent annual factor of the rising energy cost [EAE(r)] were computed by equations 7-54 and 7-55 for $r \neq i$.

$$PW(r) = \left[\frac{(1+r)^n - (1+i)^n}{(1+r) - (1+i)}\right] \times \left[\frac{1}{(1+i)^n}\right] \quad \textbf{(7-54)}$$

and

$$EAE(r) = \left[\frac{(1+r)^n - (1+i)^n}{(1+r) - (1+i)}\right] \times \left[\frac{i}{(1+i)^n - 1}\right] \quad \textbf{(7-55)}$$

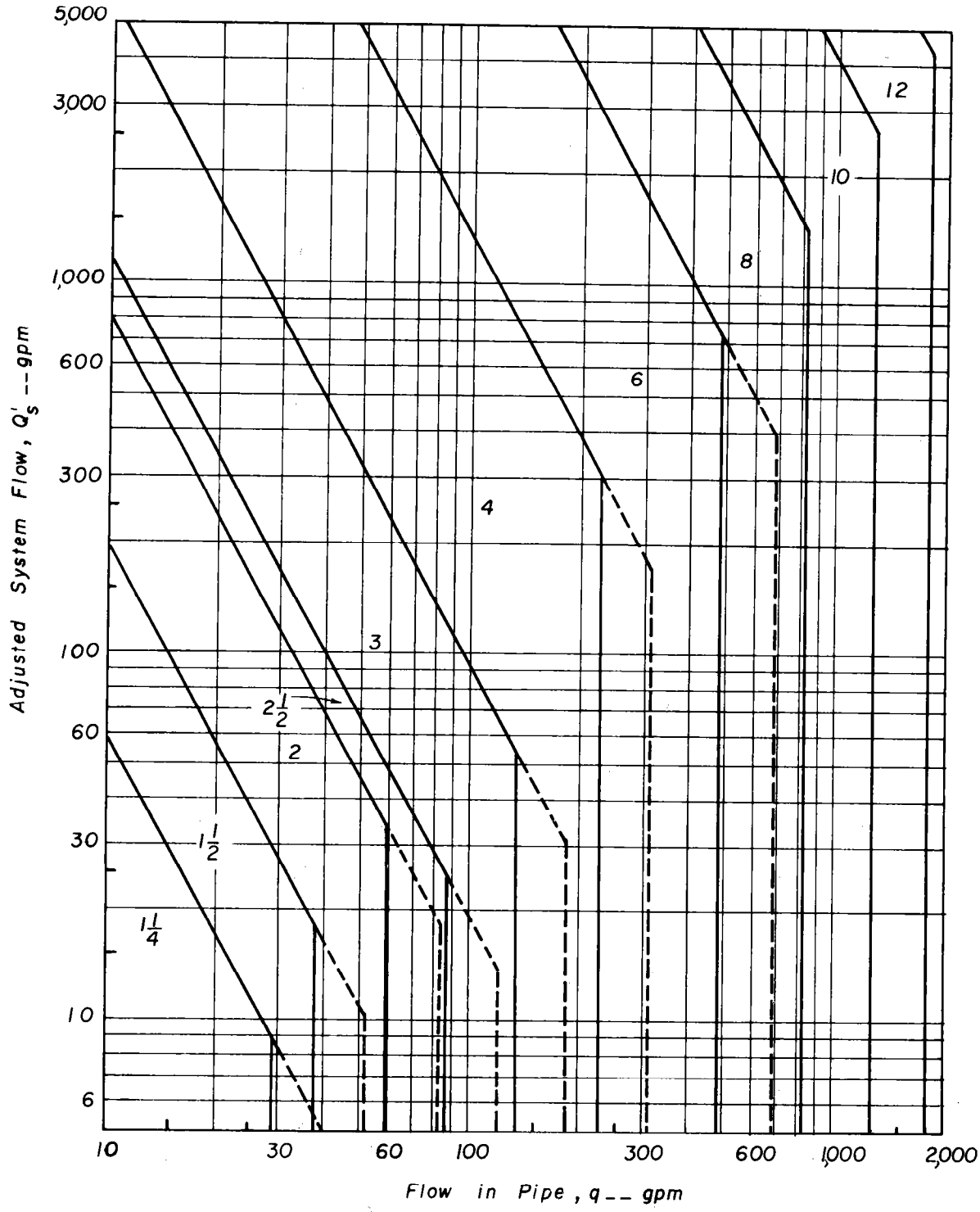

Figure 7–33.—Economic pipe-size selection chart for polyvinyl chloride thermoplastic IPS (iron pipe size) pipe having minimum acceptable SDR (standard dimension ratio) ratings. (Solid and dashed vertical lines, respectively, represent 5 to 7 ft/s velocity limitations.)

Table 7–8.—Present-worth and annual economic factors for an assumed 9-percent annual rise in energy costs with various interest rates and life expectancies

Interest (i), %[1]	Factor	Factor value with indicated life expectancy (n), years					
		7	10	15	20	30	40
10	PW(9%)[2]	6.193	8.728	12.802	16.694	23.964	30.601
	EAE(9%)[3]	1.272	1.420	1.683	1.961	2.542	3.129
	CRF[4]	0.205	0.163	0.132	0.118	0.106	0.102
	PW(0%)[5]	4.868	6.145	7.606	8.514	9.427	9.779
15	PW(9%)	5.213	6.914	9.206	10.960	13.327	14.712
	EAE(9%)	1.253	1.378	1.574	1.751	2.030	2.215
	CRF	0.240	0.199	0.171	0.160	0.152	0.151
	PW(0%)	4.160	5.019	5.848	6.259	6.566	6.642
20	PW(9%)	4.453	5.615	6.942	7.762	8.583	8.897
	EAE(9%)	1.235	1.339	1.485	1.594	1.724	1.781
	CRF	0.277	0.239	0.214	0.205	0.201	0.200
	PW(0%)	3.605	4.193	4.676	4.870	4.979	4.997
25	PW(9%)	3.854	4.661	5.449	5.846	6.147	6.224
	EAE(9%)	1.219	1.306	1.412	1.479	1.539	1.556
	CRF	0.316	0.280	0.259	0.253	0.250	0.250
	PW(0%)	3.161	3.571	3.859	3.954	3.995	4.000

[1]Interest is the time value of unsecured money to the developer.
[2]PW(9%) is the present-worth factor of the rising cost of energy, taking into account the time value of money over the life expectancy.
[3]EAE(9%) is the equivalent annual factor of the rising cost of energy, taking into account the time value of money over the life expectancy.
[4]CRF is the uniform-series annual payment (capital recovery factor), taking into account the time value of money and the depreciation of equipment over the life expectancy.
[5]PW(0%) is the present-worth factor of the constant cost of energy, taking into account the time value of money over the life expectancy.

The standard capital-recovery factor (CRF) was computed by equation 7–56.

$$CRF = \frac{i(1 + i)^n}{(1 + i)^n - 1} \qquad \textbf{(7–56)}$$

In the consideration of life-expectancy cost, the time value of unsecured money to the developer should be used as the appropriate i value in equations 7–54, 7–55, and 7–56. This rate is normally higher than bank interest rates because of the higher risks involved. For unsecured agricultural developments, the interest rates of high-grade, long-term securities should be doubled unless special tax benefits are involved.

The n of properly designed and installed PVC pipe should be 40 years. However, because of obsolescence, n values of 20 or less are frequently used. The number of brake horsepower (BHP) hours per unit of fuel that can be expected from efficient power units is as follows:

Diesel fuel	15.0 BHP hr/U.S. gal
Gasoline (water cooled)	10.5 BHP hr/U.S. gal
Tractor fuel	8.5 BHP hr/U.S. gal
Butane-propane	9.5 BHP hr/U.S. gal
Natural gas	8.5 BHP hr/100 ft^3
Electricity	1.2 BHP hr/kWh @ meter

From table 7–8 some interesting observations can be made concerning the long-term effects of rising energy costs:

1. Low i values deemphasize high first costs, as indicated by low CRF's.
2. Low i values emphasize rising energy costs, as indicated by high PW(9%)'s and EAE(9%)'s, but have less effect on constant energy costs, as indicated by PW(0%)'s.
3. High i values emphasize high first costs, but deemphasize energy costs.
4. Long useful life deemphasizes high first costs, but emphasizes energy costs.
5. Rising energy costs have a maximum effect when i is low and n is high.

6. The relative effect of rising vs. constant energy costs can be observed by comparing PW(9%) to PW(0%) or EAE(9%) to EAE(0%) = 1.0 for any n and i.

The factors presented in table 7–8 can be used with the present annual power costs (E) and the cost of the irrigation system (C) to estimate the following:

1. The present worth of the rising (9 percent per year) annual energy cost, E × PW(9%).
2. The equivalent annual cost (E′) of the rising (9 percent per year) energy cost, E × EAE(9%).
3. The annual fixed cost of the irrigation system, C × CRF.
4. The present worth of the constant energy cost, E × PW(0%).
5. The annual cost of the constant energy cost, E.
6. The present worth of the irrigation system, C.

Economic Pipe-Selection Charts

Development.—Figure 7–33 was developed for PVC thermoplastic pipe with the lowest SDR (or pressure rating) IPS pipe sizes presented in the SCS Standard "Irrigation Water Conveyance Pipeline." (These are the same pipe sizes for which friction loss tables are presented in Appendix B.) The chart can be adjusted for a given set of economic conditions and entered to directly select the most economical pipe sizes for nonlooping systems with a single pump station. The following example demonstrates how the chart is constructed, so that charts for PVC pipe of other sizes or wall thicknesses can be developed.

Step 1—Assume: cost recovery factor (CRF) = 0.100; cost per water horsepower per year (C_{whp}) = \$100.00; and PVC pipe cost = \$1.00/lb. Obtain the ID and weight per foot of pipe of each size being considered. This example shows construction of the line separating the 3- and 4-in. regions.

The ID and weight of 3-in. SDR 32.5 pipe are 3.284 in. and 74.2 lb/100 ft, respectively, and those of 4-in. SDR 41 pipe are 4.280 in. and 98.4 lb/100 ft, respectively.

Step 2—Determine the yearly fixed-cost differences between adjacent 3- and 4-in. pipes with CRF = 0.100:

$$0.100(\$98.4 - \$74.2) = \$2.42/100 \text{ ft}$$

Step 3—Determine the water horsepower savings needed to offset the annual fixed-cost difference between adjacent 3- and 4-in. pipes with C_{whp} = \$100.00:

$$\frac{\$2.42/100 \text{ ft}}{\$100.00} = 0.0242 \text{ whp/100 ft}$$

Step 4—Assume a convenient system flow rate (Q_s') and compute the difference in head loss between the adjacent pipe of different sizes ($h_{f(a,b)}$) needed to obtain the water horsepower savings computed in step 3. Assuming a Q_s' of 100 gpm for the 3- and 4-in. pipe sizes:

$$h_{f(3,4)} = \frac{0.0242 \text{ whp/100 ft} \times 3{,}960}{100 \text{ gpm}}$$

$$= 0.958 \text{ ft/100 ft}$$

Step 5—Determine the rate of pipe flow that will produce the required $h_{f(a,b)}$ between adjacent pipe of different sizes. These flow rates can be determined by trial and error with head loss gradient (J) values from calculation of pipe friction loss or from tables of friction losses. Using the friction loss tables in Appendix B for the 3- and 4-in. pipe at emitter discharge (q) = 95 gpm:

$$J_{(a,b)} = J_{(a)} - J_{(b)}$$

$$J_{(3,4)} = 1.34 - 0.38 = 0.96 \text{ ft/100 ft}$$

Step 6—Plot the points representing the Q_s' used in step 4 and q found in step 5 on log-log graph paper as in figure 7–33. For the 3- and 4-in. PVC pipes in this example, the point is Q_s' = 100 gpm and q = 95 gpm.

Step 7—Draw a line with a slope of −1.80 through each of the points plotted in step 6. These lines represent the set of q values that give the same fixed-plus-operating cost with adjacent sizes of pipe for various Q values. Each pair of lines defines the region in which the pipe size common to both lines is the most economical size to use.

Step 8—Draw a set of vertical lines that represent the q that would give a velocity of 5 ft/s for each pipe size. For the 3-in. pipe this is 132 gpm (see Appendix B), which is represented by the solid vertical line separating regions 3 and 4 of figure 7–33. Since velocity restrictions override eco-

nomic considerations, the vertical line defines the boundary between the 3- and 4-in. pipe regions at a flow rate of 132 gpm. (The dashed extensions are for velocities of 7 ft/s.)

The economic pipe-selection chart for PVC thermoplastic IPS pipe with minimum acceptable SDR rating (fig. 7–33) is based on pipe cost at \$1.00/lb, C_{whp} = \$100.00, and CRF = 0.100. The negative-sloping lines represent all the possible Q-vs.-q values for each of the adjacent pairs of pipe sizes that will give the same sum of fixed costs plus operational costs. The zone between adjacent lines defines the region of Q-vs.-q values when the pipe size that is common to both lines is the most economical selection. Figure 7–33 is universally applicable for the most economical selections of pipe size in any sized series system for the economic boundary conditions used. Uses of this chart for manifold and main-line design are presented for drip and spray systems under Sample Design for Trickle Irrigation Systems.

To use figure 7–33 for a system with various economic factors, the total system capacity (Q_s) must be adjusted to compensate for various C_{whp} and CRF values. To do this, first compute the C_{whp} by equation 7–57.

$$C_{whp} = \frac{(Q_t)(P_{uc})[EAE(r)]}{(E_p)(BHP/P_u)} \qquad (7\text{–}57)$$

Where

Q_t = average pump operating time per season, hours, equation 7–37.
EAE(r) = the equivalent annual cost factor of the rising energy cost, taking into account the time value of money and depreciation of equipment over the life expectancy, table 7–8 or equation 7–55.
P_{uc} = unit cost of power, dollars per kilowatt-hour.
E_p = pump efficiency.
BHP = brake horsepower.
P_u = unit of power.

Next, determine the system flow-rate adjustment factor (A_f) by equation 7–58.

$$A_f = \frac{0.001C_{whp}}{(CRF)(P_c)} \qquad (7\text{–}58)$$

Where

CRF = capital recovery factor, table 7–8 or equation 7–56.
P_c = pipe cost, dollars per pound.

The system flow rate for entering the economic chart (Q_s'), gallons per minute, is computed by equation 7–59.

$$Q_s' = A_f Q_s \qquad (7\text{–}59)$$

Where

Q_s = system flow rate under consideration, gallons per minute.

The constant 0.001 in equation 7–58 is the number that gives $A_f = 1$ with the economic factors used in developing figure 7–32. For economic pipe-size selection charts developed from other economic factors, the constant must be changed so that $A_f = 1$ for the C_{whp}, CRF, and pipe cost/unit used.

The procedure using the economic design chart and main-line design strategy as presented under Sample Designs for Trickle Irrigation Systems, Drip System, involves the following:

Step 1—Enter the vertical axis of figure 7–33 with Q_s' and select an "economic pipe size" for the q in each section of main-line pipe. (To hold velocities below 5 ft/s, stay within the solid vertical boundary lines.)

Step 2—Determine the head loss from pipe friction (h_f) in each section of pipe by equation 7–49a or 7–49b or from the pipe friction tables, Appendix B.

Step 3—Compute the pressure head required to overcome pipe friction plus elevation difference between the pump and each manifold inlet at m[$(H_{fe})_m$], feet, by equation 7–60.

$$(H_{fe})_m = \sum_{1}^{m} h_f \pm \triangle El \qquad (7\text{–}60)$$

Where

$\sum_{1}^{m} h_f$ = sum of the pipe friction losses between the pump and manifold inlet at m, feet.
$\triangle El$ = difference in elevation between the pump and manifold m (+ is uphill

to manfold and − is downhill), feet.

Step 4—Once the $(H_{fe})_m$ has been determined for the critical manifold, the size of other main-line branches can often be reduced. Other prospects for reduction are sections of main line that connect points that are downstream and have lower elevations than the critical manifold. The exact length of the smaller diameter pipe that will increase the head loss between two points by a specified amount (L_s), feet, can be computed by equation 7–61.

$$L_s = \frac{\triangle H}{J_s - J_l} \times 100 \qquad \textbf{(7–61)}$$

Where

$\triangle H$ = desired pressure-head increase between two points, feet.
J_s = head loss gradient of the smaller pipe, feet per 100 feet.
J_l = head loss gradient of the larger pipe, feet per 100 feet.

Lateral Line Design

This section presents the procedures for determining lateral characteristics such as: (1) flow rate and inlet pressure, (2) location and spacing of the manifolds that in effect set the lateral lengths, and (3) estimated differences in pressure within laterals.

On fields where the average slope along the laterals is less than 3 percent, it is usually most economical to supply laterals to both sides of each manifold. The manifold should be positioned so that, starting from a common manifold connection, the minimum pressures in the pair of laterals (one to either side of the manifold) are equal. Thus, on level ground the pair of laterals should have equal lengths (l) and the manifold spacing $(S_m) = 2l = L$.

If the ground slopes along the laterals (rows), the manifold should be shifted uphill from the center line. The effect is to shorten the upslope lateral and lengthen the downslope lateral so that the combination of pipe friction loss and elevation difference is in balance. The amount of the shift can be determined either graphically or numerically.

The spacing of manifolds is a compromise between field geometry and lateral hydraulics. As practical limits for preliminary design purposes, lateral pressure-head differences ($\triangle h$) can be limited to one-half of the allowable subunit pressure-head variations ($0.5\ \triangle H_s$) where the manifold plus attached laterals make up a subunit. The $\triangle h$ for a given S_m and set of lateral specifications is about the same for laterals on level fields as for laterals with slopes of as much as 2 percent. This observation helps in computing the S_m and in designing the layout of the pipeline network. For simplification, the design procedure is based on laterals that have an average emitter flow rate (q_a).

Characteristics

Several general characteristics of laterals are important to the designer.

Length.—When two laterals extend in opposite directions from a common inlet point on a manifold, they are referred to as a *pair of laterals.* For example, the laterals in figure 7–27 are paired. The length of a pair of laterals (L) is equal to the manifold spacing (S_m). The length of a *single lateral* that extends in only one direction from a manifold is designated by l.

Flow rate.—The flow rate of a lateral (q_l), gallons per minute, can be computed by equation 7–62.

$$q_l = \frac{l}{S_e}\frac{q_a}{60} = \frac{n_e q_a}{60} \qquad \textbf{(7–62)}$$

Where

S_e = spacing of emitters on the lateral, feet.
n_e = number of emitters along the lateral.
q_a = average emitter flow rate, gallons per hour.

Inlet pressure.—Sometimes it is useful to know the inlet pressure required by the average lateral in a system. The average emitter pressure head (h_a) is computed as the head that will give q_a. The general location of the average emitter that yields q_a at h_a is between $x/L = 0.60$ and $x/L = 0.62$ for constant-diameter laterals. Furthermore, about three-fourths of the head loss occurs between the average emitter and the inlet, where the flow is greatest. As flow in the lateral decreases because of water being discharged through the emitters, the head loss curve flattens (see fig. 7–31) so that only about one-fourth of the total loss takes place between the average emitters and the end.

Data in table 7–7 demonstrate the above as follows:

1. The average value of 100 h_{fx}/L is 2.67 when end effects and the values at x/L = 0.05 and 0.15 (which are not included in table 7–7) are accounted for.

2. The location of 100 $h_{fx}/L = 2.67$ can be determined by letting the friction gradient (JF) = 10.00 (which is the value used in generating table 7–7) and solving to obtain:

$$\frac{x}{L} = \left(\frac{2.67}{10.00}\right)^{1/2.75} = 0.62$$

3. The portion of the total friction loss between x/L = 0.62 and the closed end is 2.67/10.00 or about one-fourth.

The inlet pressure head that will give h_a (h_l), feet, for a pair of constant-diameter laterals with $L = S_m$ laid on a uniform slope can be computed by equations 7–63a and 7–63b.

$$h_l = h_a + 0.75h_{fp}[z^{3.75} + (1 - z)^{3.75}] - \frac{\triangle El}{2}(2z - 1) \qquad \textbf{(7–63a)}$$

Where

h_{fp} = friction loss in a lateral with length L, feet.

z = location of the inlet to the pair of laterals that gives equal minimum pressures in both uphill and downhill members (expressed as the ratio of the length of the downhill lateral to L.)

$\triangle El$ = absolute difference in elevation between the two ends of the pair of laterals, feet.

For level fields this reduces to:

$$h_l = h_a + 0.75h_{fp}(0.5)^{2.75} = h_a + 0.11h_{fp} \qquad \textbf{(7–63b)}$$

For a single constant-diameter lateral laid on uniform slopes, h_l can be computed by equation 7–63c,

$$h_l = h_a + \frac{3h_f}{4} + \frac{\triangle El}{2} \qquad \textbf{(7–63c)}$$

and the pressure head at the closed end of the lateral (h_c), feet, can be computed by equation 7–64a or 7–64b.

$$h_c = h_a - \left(\frac{h_f}{4} + \frac{\triangle El}{2}\right) \qquad \textbf{(7–64a)}$$

$$h_c = h_l - (h_f + \triangle El) \qquad \textbf{(7–64b)}$$

Where

h_f = head loss from pipe friction, feet.

$\triangle El$ = change in elevation (+ for laterals running uphill from the inlet and – for laterals running downhill, feet).

Tapered laterals.—Usually, constant-diameter laterals are used, because they are convenient to install and maintain, but tapered laterals may be less expensive. Tapered laterals are sometimes used on steep slopes where the increase in pressure from the slope would result in too much pressure at the end.

If a lateral were tapered so that the friction loss per unit length were uniform throughout, the average pressure would occur at the midpoint. In such a lateral, the term $3h_f/4$ in equation 7–63c would be changed to $h_f/2$. It is impractical to use more than two pipe sizes; therefore, when calculating h_l for a tapered lateral, replace $3h_f/4$ with $2h_f/3$ in equation 7–63c. When computing h_c by equation 7–64a, replace $h_f/4$ with $h_f/3$.

For tapered laterals, h_f must be computed in a three-step process:

Step 1—Compute h_f by equation 7–52 for the full length of the lateral that has the larger diameter pipe.

Step 2—Compute h_f values for both the large- and the small-diameter pipes for a lateral length equal to the length of small-diameter pipe and determine the difference between these values.

Step 3—The h_f for the tapered lateral will equal the h_f found in step 1 plus the difference in the two h_f values found in step 2.

In computing h_f for tapered laterals, all the computations involving equation 7–52 (and those using monographs or slide rule calculators) must include the closed end of the lateral or manifold. This must be done because use of the reduction coefficient (F) involves the assumption that (1) the discharges from all outlets are equal, and (2) no water flows beyond the last outlet of the pipe section being considered. For further details on design of multioutlet pipeline, refer to Manifold Design.

Spacing of Manifolds

The manifold spacing (S_m) in orchards should be such that adjacent manifolds are a whole number of tree spacings (S_p) apart. Furthermore, it is most convenient to have the same S_m throughout the field in all crops. A detailed example is presented under Drip System in Sample Designs for Trickle Irrigation Systems. The procedure is as follows:

Step 1—Inspect the field layout and select a reasonable S_m in accordance with the criteria listed above.

Step 2—Determine the lateral pipe friction loss (h_f) with laterals half as long as S_m (eq. 7–51 and 7–52).

Step 3—Assume that h_f = the pressure head difference along the lateral ($\triangle h$), i.e., the field is level, and compare the latter with 0.5 times the allowable subunit pressure-head variation ($\triangle H_s$) (eq. 7–34). If $\triangle h$ is much larger than 0.5 $\triangle H_s$, S_m should be decreased. If it is much smaller, S_m may be increased.

Once the friction loss for a given length of lateral has been computed, the friction loss for any other length of lateral can be computed by equation 7–65a, which is a rearrangement of equation 7–53.

$$(h_f)_b \cong (h_f)_a \left(\frac{l_b}{l_a}\right)^{2.75} \qquad \textbf{(7–65a)}$$

Where

l_a and l_b = original and new lateral pipe length, feet.

$(h_f)_a$ and $(h_f)_b$ = original and new lateral pipe friction losses, feet.

Conversely, the length of lateral (l_b) that will give any desired $(h_f)_b$ can be computed by equation 7–65b.

$$l_b \cong l_a \left(\frac{(h_f)_b}{(h_f)_a}\right)^{1/2.75} \qquad \textbf{(7–65b)}$$

Location of Manifolds

As discussed earlier, on level fields laterals should extend an equal length (l) to either side of the manifolds so that l = half the manifold spacing ($S_m/2$). On sloped fields the manifolds should be shifted uphill from the center line of the subunits, as shown in figure 7–9. The location of the manifold that will give the same minimum and maximum pressures in the uphill and downhill laterals can be determined either graphically or numerically.

Graphical solution.—The graphical solution is based on the general friction curve, figure 7–31. A detailed example of the graphical determination is presented under Drip System in Sample Designs for Trickle Irrigation Systems. The procedure is as follows:

Step 1—Determine the equivalent head-loss gradient (J′), feet, and reduction coefficient to compensate for the discharge (F) for a single lateral equal in length to the S_m. (Note: this lateral will have twice the flow rate used in step 2 of the manifold-spacing procedure.)

Step 2—Place an overlay on figure 7–31 and trace the friction curve and horizontal boundaries. For use of the 0-to-10 dimensionless horizontal scale, values for specific problems must be multipled by 10/J′F, found in step 1.

Step 3—On the overlay, draw a line representing the ground surface such that (a) the line is tangent to the friction curve and (b) the drop in elevation or slope is properly scaled.

Step 4—Locate the best manifold positions by moving the overlay down until the dashed friction curve coincides with the ground line at manifold position (x/L) = 1.0. The dashed curve represents the uphill lateral, and the intersection between the two curves is the optimum manifold location for the given S_m and topography. (Note that the solid and dashed curves intersect at x/L = 0.5 on figure 7–31. This is obviously the optimum manifold location for a level field. The dashed curve is a mirror image of the x/L = 0 to 0.5 position of the solid friction curve.)

Step 5—Adjust the manifold location uphill by as much as 3/4 of the tree spacing (S_p) or downhill by as much as 1/4 S_p, so that it falls midway between tree spacings.

Step 6—Determine the maximum head variation along the pair of laterals ($\triangle h$), feet, by first determining the maximum distance the friction curves are above the ground surface line (which is equivalent to the scaled value of $\triangle h$ divided by L/100) and then determining $\triangle h$ by equation 7–66.

$$\triangle h = \frac{J'F}{10} \frac{L}{100} \left(\frac{\triangle h}{L/100}\right)' \qquad \textbf{(7–66)}$$

Where

L = S_m, feet.
$(100\,\triangle h/L)'$ = maximum scalar distance between the friction curve and the ground surface line in the graphical solution.

Numerical solution.—The numerical solution, based on equation 7–53 and presented under Drip System in Sample Designs for Trickle Irrigation Systems, follows the same logic and procedural steps as the graphical solution. Figure 7–34 shows the dimensionless terms used in the computation that follows.

Step 1—Determine J′ and F for a single lateral equal in length to S_m.

Step 2—Find the tangent location (Y) by equation 7–67 when the average slope of the ground line (S), percent, ≤ J′; when S > J′, Y = 1. This is the x/L where the friction curve is tangent to the ground, figure 7–34.

$$Y = (S/J')^{1/1.75} \qquad \textbf{(7–67)}$$

Step 3—Solve for the unusable slope component (S′) by equation 7–68. This is the amount the friction curve needs to be raised so that it does not dip below the ground line.

$$S' = SY - J'F(Y)^{2.75} \qquad \textbf{(7–68)}$$

Step 4—Determine the optimum x/L that satisfies equation 7–69.

$$\frac{S - S'}{J'F} = (x/L)^{2.75} - (1 - x/L)^{2.75} \qquad \textbf{(7–69)}$$

To satisfy the equation, first determine the quantity on the left, and then by trial and error find the appropriate x/L value that will satisfy it.

Step 5—Adjust the manifold to fall midway between two tree rows as in step 5 of the graphical solution.

Step 6—For laterals on relatively mild slopes, the maximum △h along the pair of laterals can be determined from the x/L value that represents the actual manifold location selected by equation 7–70.

$$\triangle h = \frac{L}{100}[J'F(x/L)^{2.75} + S' - S(x/L)] \qquad \textbf{(7–70)}$$

For steep slopes the maximum △h may occur at the closed end of the downstream lateral. To check for this possibility, determine the difference ($\triangle h_c$) between the downstream-end and minimum pressure heads by equation 7–71a or directly by equation 7–71b.

$$\triangle h_c = S'(L/100) \qquad \textbf{(7–71a)}$$

$$\triangle h_c = S^{1.57}(J')^{-0.57}(1 - F)L/100 \qquad \textbf{(7–71b)}$$

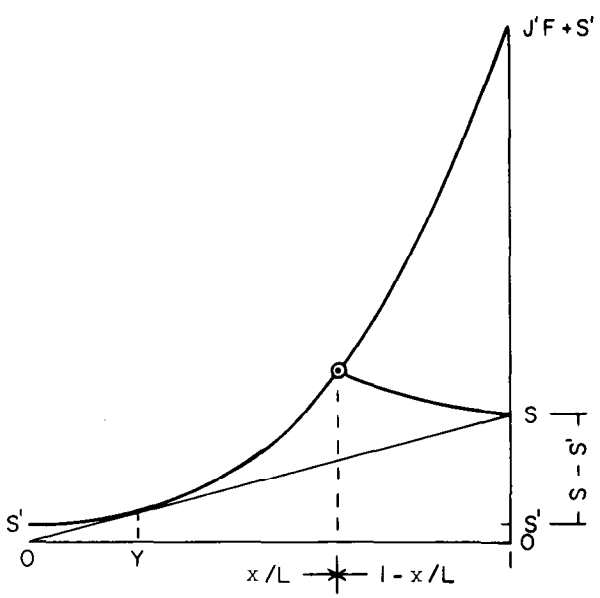

Figure 7–34.—Dimensionless sketch showing terms used in numerical solution of optimum position for manifold. J′F = friction gradient; S′ = average slope of the ground line; Y = tangent location; x/L = manifold position.

Pressure Difference

The pressure head difference (△h) along the laterals must be known for estimating the final emission uniformity (EU) of the system. As mentioned earlier, △h should be about 0.5 times the allowable subunit pressure-head variation ($\triangle H_s$) or less. Methods for computing △h are stated in step 6 of both the graphical and numerical solutions for manifold positioning (see above). However, for some designs the manifold placement is dictated by other considerations and △h must be determined by some other means.

For laterals on downhill slopes of less than 0.3

percent, level ground, or uphill slopes, $\triangle h$ can be assumed equal to the lateral inlet pressure head (h_l) minus the pressure head at the closed end (h_c) and equation 7–63 and 7–64 can be used to determine h_l and h_c. For steeper downhill laterals, equations 7–63 and 7–64 still are valid as long as the slope is fairly uniform. However, a different procedure must be used to estimate $\triangle h$ because the highest and lowest pressures will no longer be at h_l and h_c. This is apparent in figure 7–34 where the pressure is lowest at the manifold position (x/L) = the tangent location (Y).

Use the following steps to compute $\triangle h$ for laterals on slopes steeper than 3 percent.

Step 1 through 3—Follow steps 1 through 3 of the numerical solution above for determining the position for the manifold on sloping fields, except that the equivalent head loss gradient (J′) and the reduction coefficient to compensate for the discharge (F) should be determined for the length of lateral under study rather than for the manifold spacing (S_m).

Step 4—For relatively mild slopes the maximum difference in pressure head ($\triangle h$) along the lateral can be computed by equation 7–72.

$$\triangle h = \frac{L}{100}(J'F + S' - S) \qquad \textbf{(7–72)}$$

Where

J′F = friction gradient found in step 1.
S′ = unusable slope component.
S = average slope of the ground line, percent.

Equation 7–72 is the same as equation 7–71 with x/L = 1 because the manifold would be located at x/L = 1 in figure 7–34.

For steep slopes the maximum difference may occur at the closed end. To test for this possibility, determine the difference between the downstream and minimum pressure heads ($\triangle h_c$) by equation 7–71 or equation 7–71b.

Manifold Design

This section presents the procedures for determining the characteristics of a manifold, flow rate, pipe sizes to keep within the desired pressure-head differential, and inlet pressure needed to give the desired average emitter discharge (q_a).

On fields where the average slope along the manifolds is less than 3 percent, it is usually more economical to install manifolds both uphill and downhill from the main line. The inlet from the main line should be positioned so that starting from a common main line connection the minimum pressures along the pair of manifolds (one to either side of the manifold) are equal. Thus on level ground the pair of manifolds should have equal lengths.

Where the ground slopes along the manifolds (across the rows), the manifold inlet should be shifted uphill from the center. The effect is to shorten the uphill manifold and lengthen the downhill manifold so the combination of friction losses and elevation differences are in balance. This can be done with the aid of a selection graph for tapered manifolds and either graphically or numerically for single-pipe-size manifolds. The numerical procedure is similar to that described for positioning lateral inlets.

The main line layout is a compromise between field geometry and manifold hydraulics. The allowable manifold pressure-head variation may be computed by equation 7–73.

$$(\triangle H_m)_a = \triangle H_s - \triangle h' \qquad \textbf{(7–73)}$$

Where

$\triangle H_s$ = the allowable subunit pressure variation, feet.
$\triangle h'$ = the greater of $\triangle h$ or $\triangle h_c$, the lateral-line pressure variation, feet.

For simplification, the design procedure is based on laterals with the average emitter flow rate (q_a). Thus, for manifolds serving rectangular subunits, the lateral flow rate (q_l) is assumed to be constant.

Characteristics

Manifolds are usually tapered and designed to use pipe of two, three, or four sizes. For adequate flushing, the diameter of the smallest pipe should be no less than one-half that of the largest pipe. The velocity should be limited to about 7 ft/s in manifolds. (This is higher than the 5 ft/s used for main lines because the outlets along the manifold are always open, so water-hammer shock is dampened.)

Length.—When two manifolds extend in opposite directions from a common inlet point, they are referred to as a pair of manifolds. For example, the manifolds serving blocks I and II in figure 7–27 are a pair. If only one manifold is connected at an inlet point, as in figure 7–9, the design is termed a single-manifold configuration.

The length of a pair of manifolds (L_p) can be computed by equation 7–74.

$$L_p = [(n_r)_p - 1]S_r \qquad \textbf{(7–74)}$$

Where

$(n_r)_p$ = number of row (or lateral) spacings served from a common inlet point.
S_r = row spacing, feet.

The length of a single manifold (L_m), feet, is usually equal to that computed by equation 7–75.

$$L_m = (n_r - 1/2)S_r \qquad \textbf{(7–75)}$$

Where

n_r = number of row (or lateral) spacings served by the manifold.
S_r = row spacing, feet.

Inlet position.—For optimal hydraulic design, the inlet to pairs of manifolds should be located so that the minimum pressure in the uphill manifold equals that in the downhill manifold. However, field boundaries, roadways, topographic features such as drains, structures, or existing facilities often dictate the location of main lines and manifold inlets. Furthermore, sometimes the inlet must be positioned to balance system flow rates where manifolds making up pairs are operated individually.

Obviously, for single manifolds the inlet location is fixed. Where a pair of manifolds lies on a contour, the inlet should be in the center of the pair. For pairs of manifolds of a single pipe size serving rectangular subunits, the procedure for locating the inlet is essentially the same as that described for locating lateral-line inlets. To use either the graphical or numerical procedure outlined under Lateral Line Design, replace S_m with L_p and select a suitable pipe size so that the head loss for a manifold with $L_m = L_p/2$ is less than the allowable manifold pressure variation [$(\triangle H_m)_a$], feet.

The inlet location that will balance the minimum uphill and downhill pressures is not precise for tapered manifolds because it depends on the selection of pipe sizes and lengths. Figure 7–35 was developed as a guide to selecting the inlet location for tapered manifolds. The figure's use greatly simplifies the selection process. For example, if the manifold is on the contour, the average slope of the ground line (S), percent, = 0; therefore, the slope ratio is 0 and the distance from the downhill end (x) = 0.5 L_p, which is the center of the pair of manifolds.

Assuming that $(\triangle H_m)_a$ = 0.5 ft for a pair of manifolds with L_p = 1,000 ft and S = 1 percent, the manifold inlet location can be found as follows: slope ratio = 2; x ≅ 0.75 L_p from figure 7–35; therefore, L_m = 750 ft for the downhill manifold and L_m = 250 ft for the uphill manifold.

Proper location of the inlet to pairs of sloping manifolds can increase both uniformity and savings of pipe costs. The pipe cost savings result from replacing the larger diameter pipe at the inlet end of the long downhill manifold with the smaller diameter pipe used for the short uphill manifold.

Inlet pressure.—As a rule, the main pressure-control (adjustment) points are at the manifold inlets. Therefore, the manifold inlet pressure must be known to properly manage the system and determine the total dynamic head required. The manifold

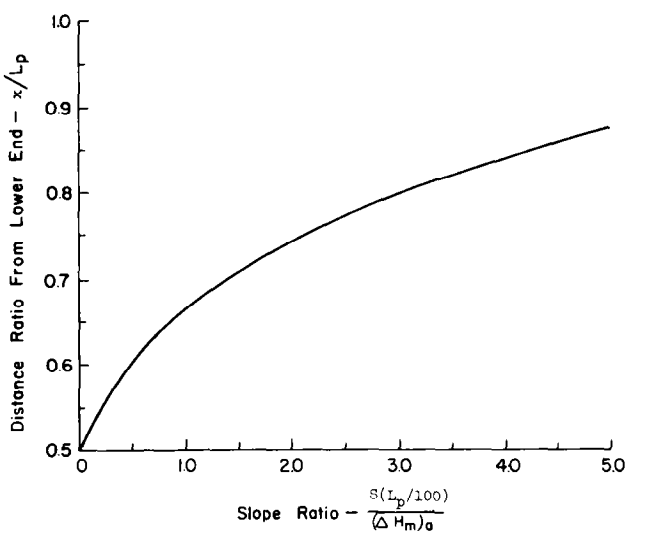

Figure 7–35.—Graph for selecting location of inlet to a pair of tapered manifolds on a slope. x = distance of inlet from closed end; L_p = length of the pair of manifolds; S = average slope of the ground line; $(\triangle H_m)_a$ = allowable manifold pressure variation.

inlet pressure head (H_m), feet, for subunits with single pipe-size laterals can be computed by equations 7–76a and 7–76b.

$$H_m = h_l + \triangle H'_m \qquad \textbf{(7–76a)}$$

Where

h_l = lateral inlet pressure that will give the average pressure head (h_a), feet. For laterals with one tubing diameter on uniform slopes, h_l can be determined either by equation 7–63 or graphically.

$\triangle H'_m$ = difference between the manifold *inlet* pressure and h_l, feet. It can be estimated by:

$$\triangle H'_m = MH_f + 0.5\ \triangle El$$

in which M = 0.75 for manifolds with one pipe size, M = 0.6 for manifolds with two pipe sizes, and M = 0.5 for manifolds with three or more pipe sizes. It can also be estimated graphically.

For tapered laterals:

$$H_m = h_a + \triangle h' + \triangle H'_m \qquad \textbf{(7–76b)}$$

Where

$\triangle h'$ = difference between the lateral inlet pressure and h_a, feet. For tapered laterals $\triangle h'$ should be estimated graphically.

Economic-Chart Design Method

An economic pipe-size selection chart such as figure 7–33 can be used to select pipe sizes and lengths for manifolds serving rectangular subunits. The chart used for a design should be specifically constructed for the pipe materials and wall thicknesses (or pressure ratings) that the design calls for. (Figure 7–33 is designed for PVC thermoplastic IPS pipe with the minimum SDR ratings.) The general procedure for using the economic chart is presented in Pipeline Hydraulics.

The procedure for the economic chart method for designing tapered manifolds is as follows:

Step 1—Compute the annual cost per water horsepower (C_{whp}) by equation 7–57.

Step 2—Determine the system flow-rate adjustment factor (A_f) by equation 7–58.

Step 3—Calculate the adjusted system flow (Q'_s) for entering the chart, gallons per minute, by equation 7–77.

$$Q'_s = A_f q_m \qquad \textbf{(7–77)}$$

Where

q_m = flow rate in the manifold, gallons per minute. (This is equal to the number of laterals served by the manifold times the flow rate per lateral. For a pair of manifolds use the flow rate in the downhill [larger] manifold.)

Step 4—Enter the vertical axis of figure 7–34 with Q'_s, draw a horizontal line across the graph, and record the flow rates (along the bottom axis) where this line intersects the upper limit of each pipe-size region. These are the flow rates at which each subsequently larger pipe diameter should be used. Select no more than four pipe sizes so that the smallest pipe is no less than half the diameter of the largest pipe.

Step 5—Calculate the lengths of each size pipe by equation 7–78.

$$L_d = \frac{q_d - q_{d-1}}{q_m} L_m \qquad \textbf{(7–78)}$$

Where

L_d = length of pipe with diameter d, feet.

q_d = upper-limit flow rate for the pipe with diameter d, gallons per minute.

q_{d-1} = upper-limit flow rate for the pipe with the next smaller diameter, gallons per minute.

L_m = length of the manifold used in computing q_m, feet.

Step 6a—Determine the pressure head loss from pipe friction (H_f) in the tapered manifold. The general theory for doing this is outlined in the Lateral Line Design section. A detailed example of the numerical process is presented under Drip System in Sample Designs for Trickle Irrigation Systems.

Step 6b—Figures 7–36 and 7–37 were prepared to provide a graphical solution that greatly simplifies the calculation of the head loss in a tapered manifold. The figures are plots of the head loss curves for manifolds made up of PVC thermoplastic IPS pipe with different nominal diameters with the minimum SDR ratings. Figure 7–36 is based on manifolds with 2-gpm outlets every 20 ft and figure 7–37 is based on manifolds with 6-gpm outlets every 60 ft. Use figure 7–36 for manifold outlet discharges below 3.4 gpm and figure 7–37 for discharges between 3.4 and 10.2 gpm. (Note that when a manifold feeds pairs of laterals, the outlet discharges are equal to the average discharge to each pair of laterals.)

The H_f values given in figures 7–36 and 7–37 are both based on 0.1 gpm/ft. The H_f values obtained from the figures must be multiplied by a scale factor (k) to reflect the actual manifold discharge per unit length. The dimensionless k can be computed by equations 7–79a and 7–79b.

$$k = (L_m/q_m)(0.1 \text{ gpm/ft}) \qquad \textbf{(7–79a)}$$

$$k = (S_l/q_l)(0.1 \text{ gpm/ft}) \qquad \textbf{(7–79b)}$$

Where

S_l = lateral spacing, feet.
q_l = lateral flow rate, gallons per minute.

To use the graphical method for determining the head loss from pipe friction:

Step 1—Lay a piece of tracing paper on figure 7–36 or 7–37 (depending on q_l) and draw lines through the origin along the abscissa and ordinate.

Step 2—Draw vertical lines at flow rates representing the divisions between successive pipe sizes obtained in step 4.

Step 3—Trace the curve representing the smallest diameter pipe between the origin and the flow rate at which the next largest diameter pipe should begin.

Step 4—Slide the overlay down so that the upper end of this curve (for the smaller pipe) coincides with the curve for the (next) larger pipe at the flow rate where pipe size should change and trace the curve to the next pipe-size change point.

Step 5—Repeat step 4 until the traced set of curve segments reaches q_m.

Step 6—The series of head loss segments represents the head loss in the tapered manifold; and the sum of the head losses in each segment is proportionate to H_f at q_m on the overlay. The actual H_f can be computed by equation 7–80.

$$H_f = k(H_{fg}) \qquad \textbf{(7–80)}$$

Where

H_f = actual pressure-head loss in the manifold from pipe friction, feet.
(H_f) = pressure-head loss in the manifold from pipe friction, taken from graph overlay in above steps, feet.

An example of the graphical solution is presented in figure 7–42 under Manifold Design, Drip System, in Sample Designs for Trickle Irrigation Systems.

Step 7—Estimate manifold pressure-head variation ($\triangle H_m$) for the tapered manifolds by equations 7–81a, 7–81b, and 7–81c. For level manifolds:

$$\triangle H_m = H_f \qquad \textbf{(7–81a)}$$

For uphill manifolds:

$$\triangle H_m = H_f + S(L_m/100) \qquad \textbf{(7–81b)}$$

For downhill manifolds $\triangle H_m$ can be determined graphically, or when $\triangle El < H_f$, it can be approximated by:

$$\triangle H_m = H_f - [S(0.1 - \frac{0.36}{c})\frac{L_m}{100}] \qquad \textbf{(7–81c)}$$

Where

S = slope of the manifold, percent.
c = number of pipe sizes used in the manifold.

Step 8—If $\triangle H_m \leq 1.1$ times the allowable manifold pressure variation $(\triangle H_m)_a$, feet, the design is satisfactory. If $\triangle H_m > 1.1(\triangle H_m)_a$, the manifold pipe sizes must be adjusted to reduce H_f. Small adjustments can usually be made by inspection. For large adjustments calculate a modified system flow rate (Q_s'') by equations 7–82a, 7–82b,

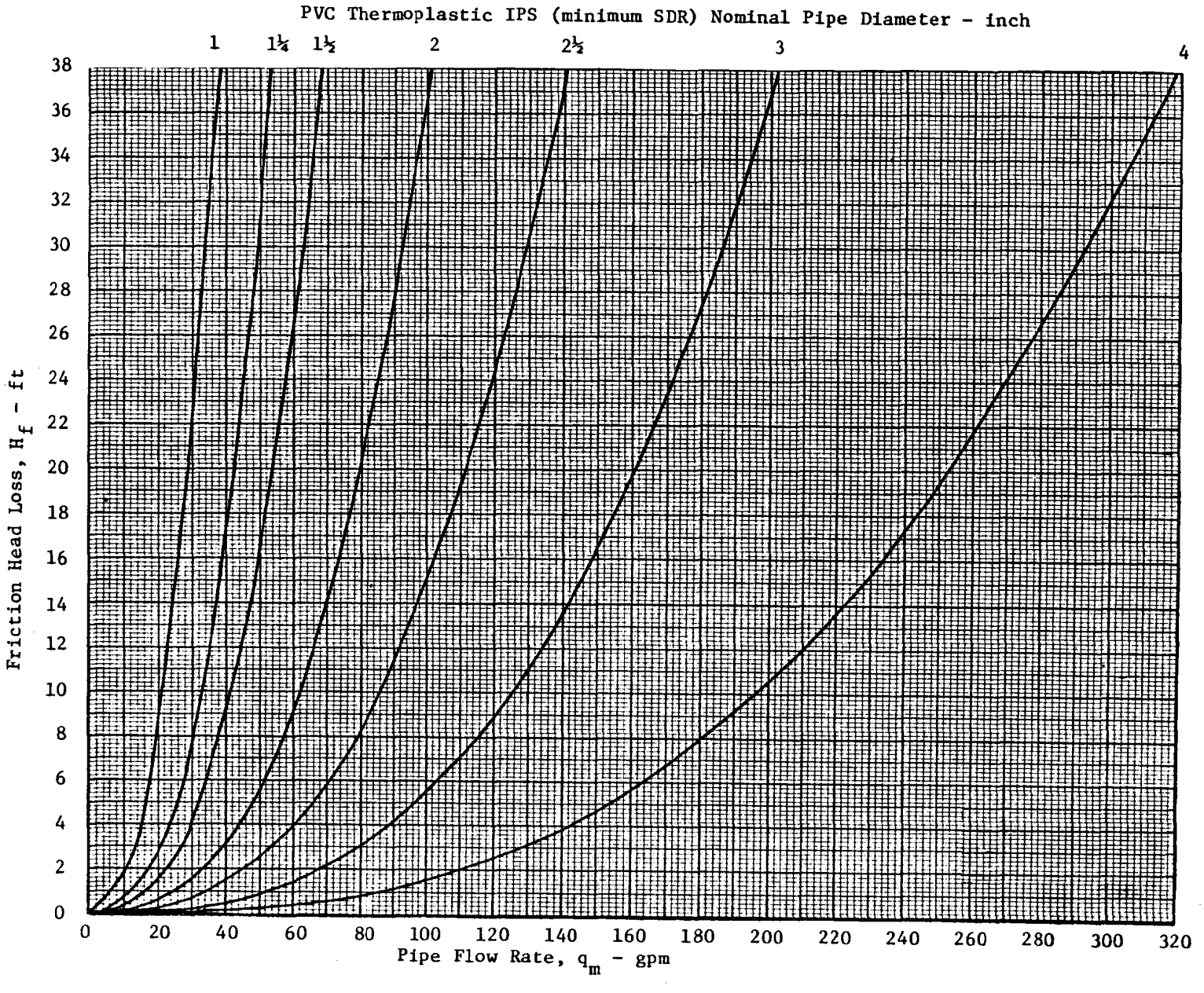

Figure 7-36.—Standard manifold friction curves for 2-gpm outlet every 20 ft.

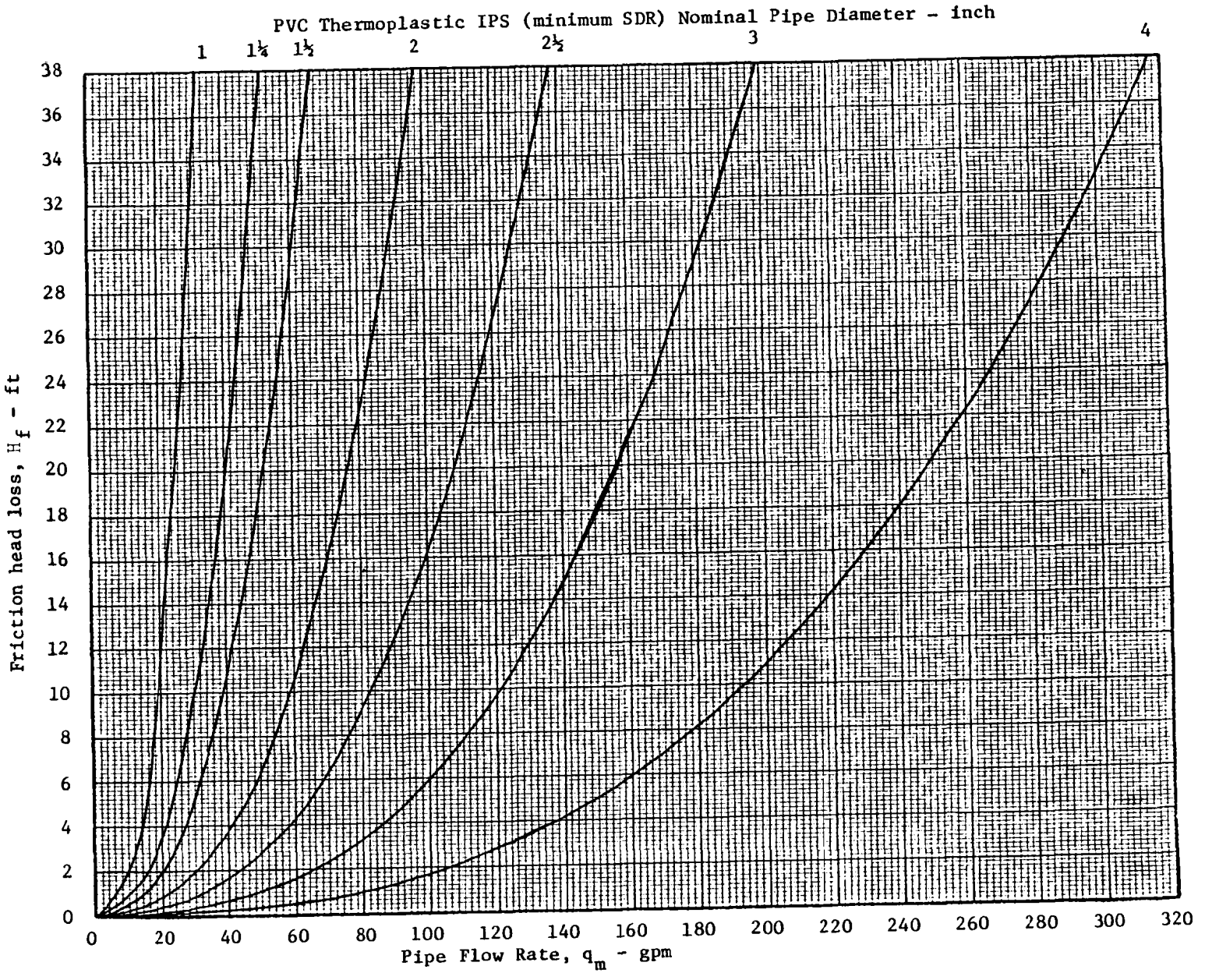

Figure 7-37.—Standard manifold friction curves for 6-gpm outlet every 60 ft.

and 7–82c for reentering the economic pipe-size selection chart. For level manifolds:

$$Q_s'' = \frac{H_f}{(\triangle H_m)_a} Q_s' \qquad \textbf{(7–82a)}$$

For uphill manifolds:

$$Q_s'' = \frac{H_f}{(\triangle H_m)_a - S(L_m/100)} \qquad \textbf{(7–82b)}$$

And for downhill manifolds:

$$Q_s'' = \frac{H_f}{(\triangle H_m)_a + [S(1.0 - \frac{0.36}{c})L_m/100]} \qquad \textbf{(7–82c)}$$

Step 9—Repeat steps 4 through 8, beginning with Q_s'', until $(\triangle H_m)_a$ is satisfactory, as specified in step 8.

Step 10—For pairs of manifolds that operate simultaneously from the same regulating value, compute H_m, using the weighted (by length) uphill and downhill values for the amount $(\triangle H_m')$ the manifold inlet pressure differs from lateral line inlet pressure, by equation 7–77a or 7–77b.

General Graphical-Design Method

The graphical-design procedure for manifolds of a single pipe size is the same as that given under Lateral Line Design. The general graphical-design method that follows can be used for tapered manifolds that serve either rectangular or nonrectangular trapezoidal subunits. It is more time consuming than the economic-chart method (which can be used only for rectangular subunits), but it is more precise. A simpler graphical method can, however, be used on rectangular subunits. The alternate graphical method is designed to use the standard manifold curves (figs. 7–36 and 7–37).

The general graphical-design procedure for tapered manifolds (or laterals) is the same for both rectangular and nonrectangular trapezoidal subunits. However, the reduction coefficient to compensate for the discharge (F) used to compute friction loss in multiple-outlet pipelines and the ratios for plotting the dimensionless pipe-friction loss curves must be adjusted for the subunit shape. The shape factor of the subunit (S_f) is defined by equation 7–83.

$$S_f = \frac{(q_l)_c}{(q_l)_a} = \frac{(n_p)_c}{(n_p)_a} \qquad \textbf{(7–83)}$$

Where

$(q_l)_c$ = flow rate into the lateral (pair) at the closed end of the manifold, gallons per minute.
$(q_l)_a$ = average lateral (pair) flow rate along the manifold, gallons per minute.
$(n_p)_c$ = number of plants in the row at the closed end of the manifold.
$(n_p)_a$ = number of plants in the average row in the subunit.

The pressure head loss from pipe friction in a manifold (H_f), feet, can be computed by equation 7–84.

$$H_f = JFF_s(L_m/100) = JF'(L_m/100) \qquad \textbf{(7–84)}$$

Where

J = head loss gradient of a pipe, feet per 100 feet.
F_s = manifold pipe-friction adjustment factor, figure 7–37.
JF′ = scalar ratio for field shape.
L_m = actual length of the manifold, feet.

The general graphical method for designing tapered manifolds is as follows:

Step 1—Determine the largest pipe size to be used in the manifold. This will be the smallest pipe that will give a manifold pressure-head variation ($\triangle H_m$) < the allowable manifold pressure variation [$(\triangle H_m)_a$] by equation 7–81 or possibly one pipe size larger.

To do this:

1. First compute S_f by equation 7–83.
2. Then find F_s for S_f in figure 7–38.
3. Find the value of J in Appendix B.
4. Find F in table 7–6.
5. Compute H_f by equation 7–84.
6. Use H_f in equation 7–81a, 7–81b, or 7–81c to find $\triangle H_m$.

Step 2—Determine four scalar ratios for field shape (JF′) values for manifold flow rate (q_m), gallons per minute, using the largest and three next smaller pipe sizes. (The diameter of the mani-

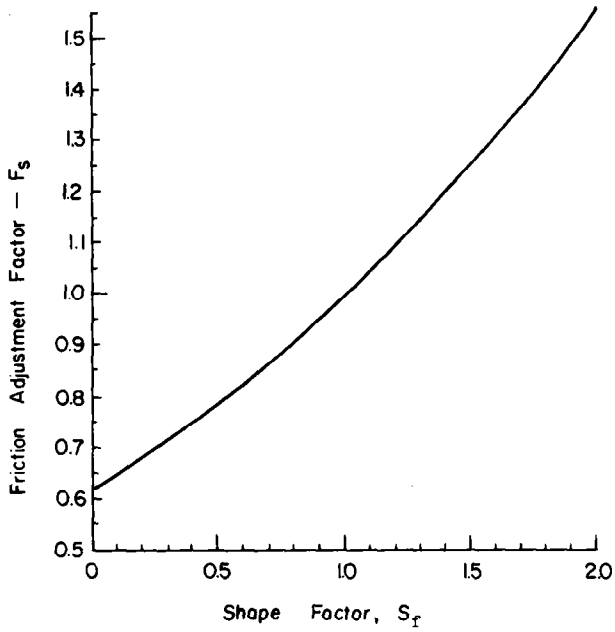

Figure 7-38.—Graph for determining manifold pipe-friction adjustment factors for trapezoidal subunits.

fold's smallest pipe should be at least half the diameter of the manifold's largest pipe.)

If the range of flow rates given by the appropriate table in Appendix B does not include the required q_m, select from the table the value of the head loss gradient of the manifold pipe (J), feet per 100 feet, as J_x for the largest flow rate (q_x) given for the required pipe size. The required J value can then be computed by equation 7-85.

$$J = J_x\left(\frac{q_m}{q_x}\right)^{1.8} \qquad \textbf{(7-85)}$$

Where

J_x = J value from Appendix B for the largest flow rate in the table for the required pipe size, feet per 100 feet.

q_x = largest flow rate (Q) in the appropriate table for pipe size in Appendix B, gallons per minute.

Step 3—Set up a table to organize the dimensionless data for plotting a set of curves scaled to represent each of the four sizes of pipe. (See table 7-9.) First select the proper values for JF′

Table 7-9.—Scaled values of $\triangle H_m/(L/100)$ for constructing a set of dimensionless manifold friction-loss curves for manifold flow rate (q_m) = 178 gpm and reduction coefficient to compensate for discharge (F) = 0.38

		$\triangle H_m/(L/100)$ at indicated pipe size (in.) and JF′)			
x/L[1]	JF′[2] ratio	2 11.09	2½ 4.41	3 1.59	4 0.42
0.10	0.002	0.02	0.01	0.003	0
0.20	0.013	0.14	0.06	0.02	0.005
0.25	0.023	0.26	0.10	0.04	0.01
0.30	0.037	0.41	0.16	0.06	0.02
0.35	0.057	0.63	0.25	0.09	0.02
0.40	0.081	0.90	0.36	0.13	0.03
0.45	0.112	1.24	0.49	0.18	0.05
0.50	0.149	Velocity	0.66	0.24	0.06
0.55	0.193	limit	0.85	0.31	0.08
0.60	0.245		1.08	0.39	0.10
0.65	0.305		1.35	0.48	0.13
0.70	0.374		Velocity	0.59	0.16
0.75	0.452		limit	0.72	0.19
0.80	0.540			0.86	0.23
0.85	0.638			1.01	0.27
0.90	0.747			1.19	0.31
0.95	0.868			1.38	0.36
1.00	1.000			1.59	0.42

[1]It is normally sufficient to use only the 0.1, 0.2, 0.3, . . . 1.0 values of x/L.
[2]Note that scalar ratios (JF′) from table 7-10 were divided by 10.

ratio vs. x/L for the nearest S_f from table 7–10.

Then multiply the JF′ values found in step 2 for each of the four pipe sizes by each of the JF′ ratios from the table. There is, however, no need to compute values representing velocities greater than 7 ft/s. Furthermore, the full 0.1, 0.2. . . values should give enough data points.

Step 4—Plot the data tabulated in step 3 on regular graph paper with (x/L) as the abscissa and $\triangle H_m/(L/100)$ as the ordinate (see figure 7–39). This set of curves represents a set of four single-size pipe manifolds drawn to a single dimensionless scale.

Step 5—Determine the dimensionless allowable head-loss ratio (j) by equation 7–86.

$$j = \frac{(\triangle H_m)_a}{L_m/100} \qquad \textbf{(7–86)}$$

This represents the allowable pipe-friction loss following the same proportional scale as the set of pipe friction curves.

Step 6—Place a transparent overlay on the set of dimensionless pipe-friction curves, then trace the horizontal and vertical scales and the left vertical boundary (see figure 7–40).

Step 7a—For level manifolds draw a sloping line through the origin and through j at x/L = 1. Then draw a second sloping line parallel to the first and passing through 0.9j at x/L = 1. (See the solid and dashed lines in figure 7–40.)

Step 7b—For steeply (down) sloping manifolds (or pairs of manifolds) where S > 3j, draw a sloping line from the origin to $S = \triangle El/100L$ at x/L = 1. (This line represents the ground slope drawn to the same scale as the friction curves.) Then draw a second line above and parallel to the ground slope line and passing through (j + S) at x/L = 1. (See the solid and dashed lines in figure 7–41).

Step 7c—For mildly (down) sloping manifolds (or pairs of manifolds) where S < 3j, draw a sloping line from 0.15S at x/L = 0 to (j + S) at x/L = 1. Then draw a second line below and parallel to the first and passing through 0.9(j + S) at x/L = 1.

Table 7–10.—Scalar JF′ ratios for constructing dimensionless curves of x/L vs. $\triangle H_m/(L/100)$ for various field-shape factors (S_f)[1]

	JF′ ratio for indicated S_f				
x/L	0.0	0.5	S_f = 1.0	1.5	2.0
0.10	0.00	0.01	0.02	0.03	0.05
0.20	0.01	0.06	0.13	0.19	0.25
0.25	0.02	0.11	0.23	0.34	0.44
0.30	0.04	0.20	0.37	0.54	0.69
0.35	0.08	0.31	0.57	0.80	1.00
0.40	0.15	0.47	0.81	1.12	1.38
0.45	0.26	0.68	1.12	1.50	1.83
0.50	0.42	0.96	1.49	1.95	2.34
0.55	0.64	1.30	1.93	2.47	2.91
0.60	0.96	1.73	2.45	3.05	3.55
0.65	1.38	2.26	3.05	3.70	4.23
0.70	1.94	2.90	3.74	4.42	4.97
0.75	2.66	3.66	4.52	5.20	5.74
0.80	3.58	4.57	5.40	6.05	6.56
0.85	4.73	5.46	6.38	6.95	7.39
0.90	6.16	6.89	7.47	7.92	8.25
0.95	7.90	8.33	8.68	8.93	9.12
1.00	10.00	10.00	10.00	10.00	10.00

[1] In all cases, flow is from left to right.

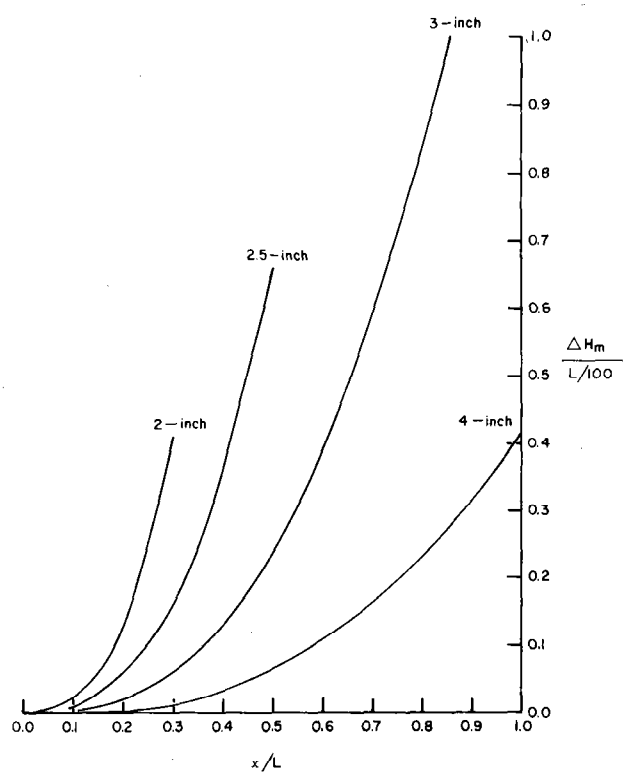

Figure 7–39.—Dimensionless manifold friction curves scaled to represent manifold flow rate (q_m) = 178 gpm through each size of pipe. x = position of point on manifold; L = length of manifold; $\triangle H_m$ = manifold pressure-head variation.

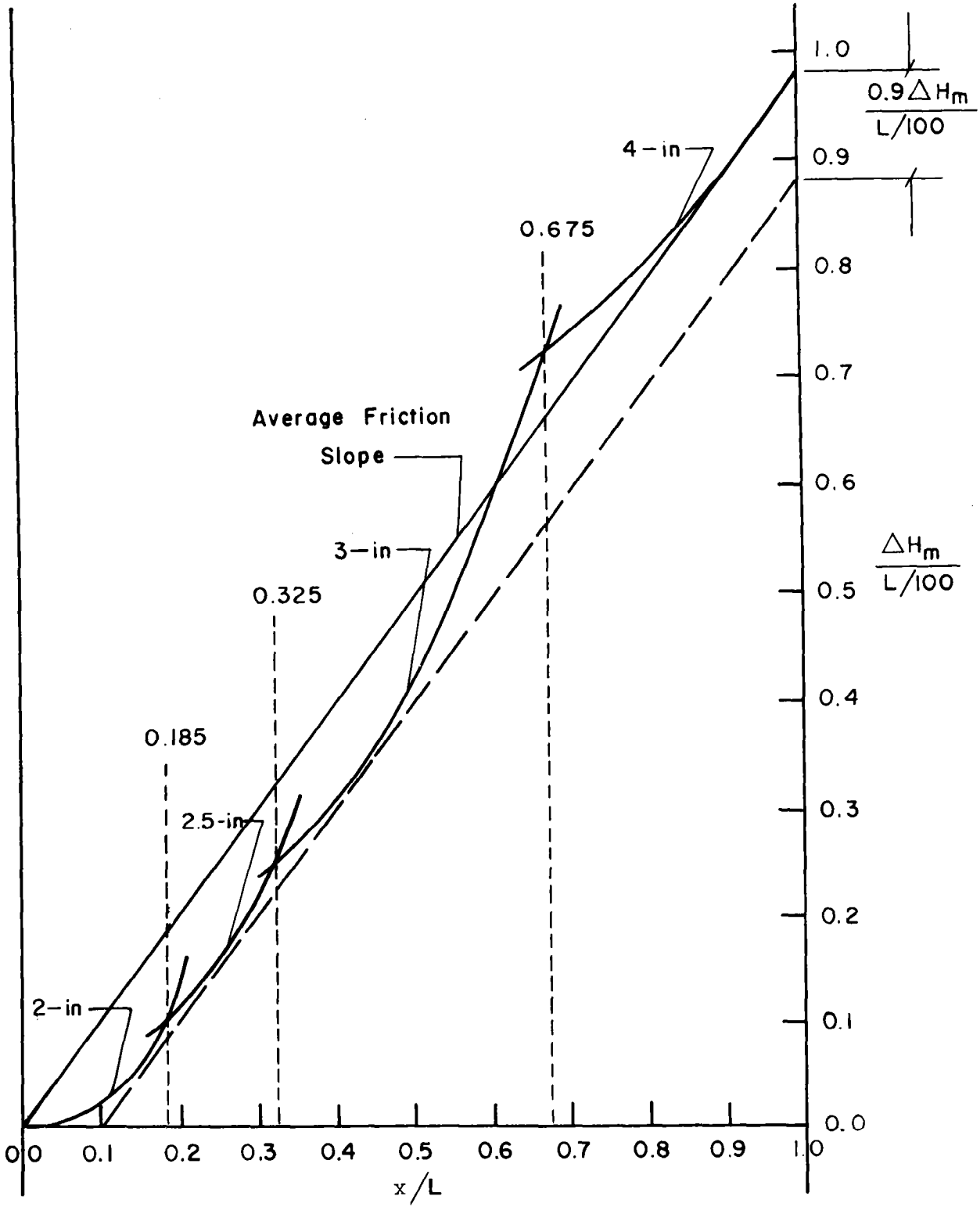

Figure 7-40.—Overlay for design of manifolds (1), (2), and (3) using the general graphical-design method. X = position of point on manifold; L = length of manifold; ΔH_m = manifold pressure-head variation.

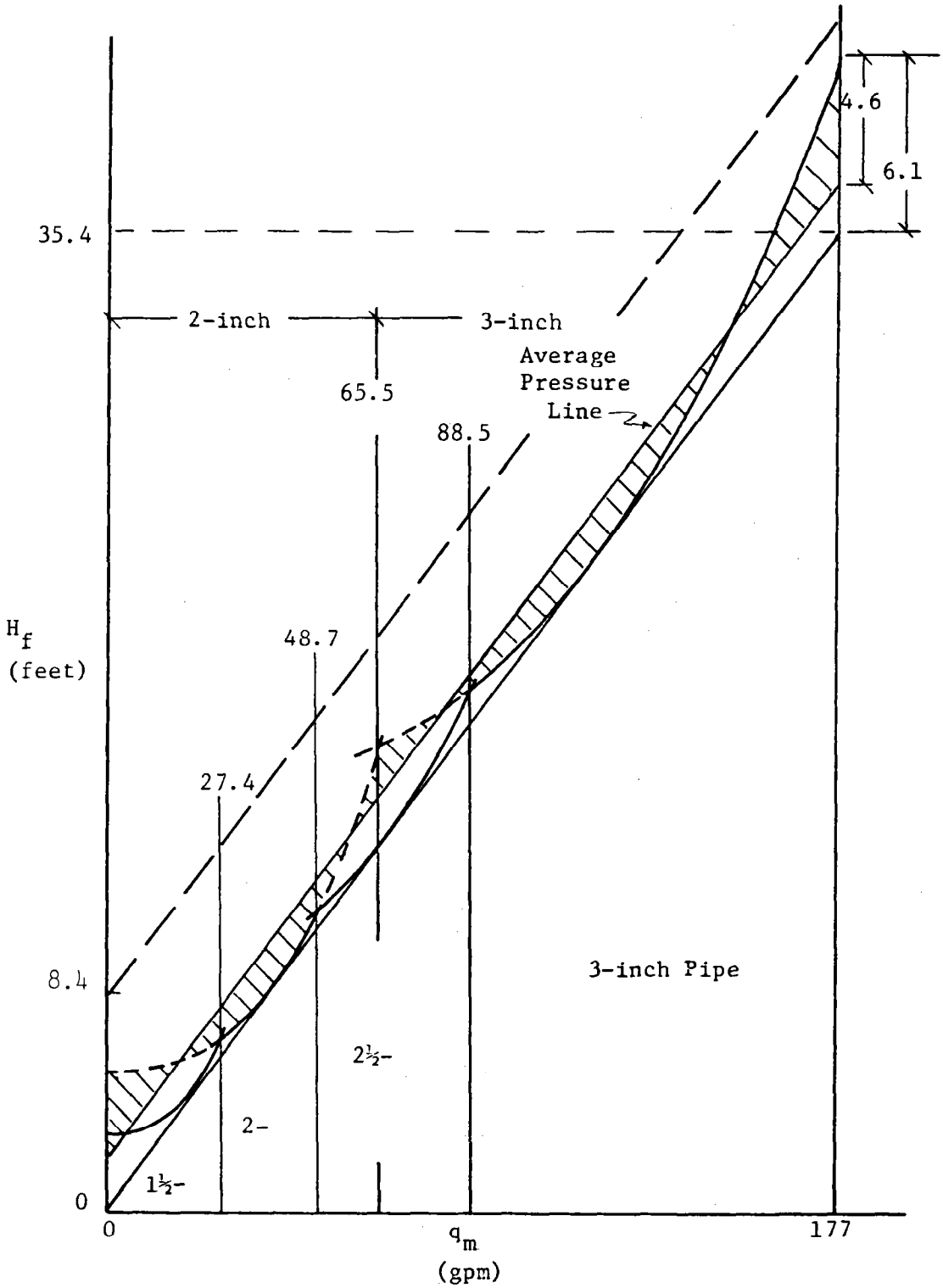

Figure 7–41.—Friction curve overlay to demonstrate graphical method using a standard manifold curve for designing a tapered manifold for a steep slope. H_f = manifold pressure-head loss from pipe friction; q_m = manifold flow rate.

Step 7d—For manifolds running up slope, draw a sloping line for S at x/L = 0 to 0 at x/L = 1. Then draw a horizontal line from j at x/L = 0 to x/L = 1.

Step 8—The most economical design of each manifold is defined by the pairs of lines developed in step 7. The final design is represented by a combination of dimensionless pipe-curve sections representing various pipe diameters and lengths. The procedure for drawing the composite curve is as follows:

1. Start at the origin and trace the friction curve of the smallest permissible pipe from the origin to its intersection with the average friction-slope line.
2. Slide the overlay down until the friction curve of the second pipe size is tangent to the lower limit line. Trace the friction curve from its intersection with the previous friction curve to its intersection with the average friction-slope line.
3. Slide the overlay down, repeating step 2. This time, however, it will be necessary to extend the friction curve well beyond the average friction-slope line.
4. Slide the overlay down until the intersection of the average friction-slope line coincides with the x/L = 1 intercept of the friction curve of the largest pipe to be used. Now trace the friction curve until it intersects with the previous curve segment.

Alternative Graphical-Design Method

The alternative graphical-design method is similar to the general method except that, for rectangular subunits, the set of standard manifold curves presented in figures 7–36 and 7–37 can be used. This eliminates the need for computing and drawing a special set of curves for each set of design conditions. Steps 2, 3, and 4 in the general procedure can be eliminated, and step 1 can be more easily handled by trial and error.

After selection of the proper set of standard manifold curves (see step 6b under Economic-Chart Design Method), the procedure is similar to steps 5 through 8 of the general graphical-design method. Therefore, begin with step 5′ so the comparison can be better visualized.

Step 5′—The standard manifold curves give the manifold pressure-head loss (H_f) for a 0.1-gpm/ft average manifold discharge. Therefore, the allowable manifold-pressure variation [$(\triangle H_m)_a$], feet, and slope along the manifold (S) must be properly scaled to compensate for the difference between the standard curves and the manifold under study. This can be done by equations 7–87 and 7–88.

$$j' = \frac{(\triangle H_m)_a}{k} \qquad \textbf{(7–87)}$$

Where

j' = $(\triangle H_m)_a$ value properly scaled for the manifold under study, feet.
k = scale factor computed by equation 7–80a or 7–80b.

$$S' = \frac{SL_m}{100k} = \frac{Sq_m}{10} = \frac{\triangle El}{k} \qquad \textbf{(7–88)}$$

Where

S' = elevation (from S) properly scaled for the manifold under study, feet.
L_m = actual length of the manifold, feet.
q_m = actual flow rate in the manifold, gallons per minute.
$\triangle El$ = difference in elevation along the manifold, feet.

Step 6′—Place a transparent overlay on the set of standard manifold curves, then trace the horizontal and vertical scales and draw a vertical line at q_m (see figure 7–42).

Step 7′—For level manifolds draw a sloping line through the origin and j′ at q_m. Then draw a sloping line parallel to it and passing through 0.9 j′ at q_m. (See the solid and dashed lines on figure 7–42.)

Step 7b′—For steeply (down) sloping manifolds (or pairs of manifolds) where $S' > 3j'$, draw a sloping line from the origin to S′ at q_m. (This line represents the ground slope drawn to the same scale as the friction curves.) Then draw a second line above and parallel to the ground slope line and passing through (j′ + S′) at q_m. (See the solid and dashed lines in figure 7–41.)

Step 7c′—For mildly (down) sloping manifolds (or pairs of manifolds) where $S' < 3j'$, draw a sloping line from 0.15S′ at $q_m = 0$ to (j′ + S′) at q_m. Then draw a second line below and parallel to it

passing through $0.9(j'+S')$ at q_m.

Step 7d'—For manifolds running up slope draw a sloping line from S' at $q_m = 0$ to 0 at q_m. Then draw a horizontal line from j' at $q_m = 0$ to q_m.

Step 8'—This is the same as step 8 for the general graphical-design method.

Estimating Pressure Loss From Pipe Friction

The pressure head loss from pipe friction (H_f) can be estimated from the H_f of a similar manifold (or lateral) by equation 7–89.

$$(H_f)_2 = \frac{L_2}{L_1} \frac{(F_s)_2}{(F_s)_1} \left(\frac{q_2}{q_1}\right)^{1.8} (H_f)_1 \qquad \textbf{(7–89)}$$

Where

$(H_f)_2$ = estimate of the pressure head loss from pipe friction for the manifold, feet.

$(H_f)_1$ = pressure head loss from pipe friction for the original manifold, feet.

L_1 = length of pipe in the original manifold, feet.

L_2 = length of pipe in the manifold for which $(H_f)_2$ is being estimated, feet.

$(F_s)_1$ = friction adjustment factor for the original manifold.

$(F_s)_2$ = friction adjustment factor for the manifold for which $(H_f)_2$ is being estimated.

q_1 = flow rate in the original manifold, gallons per minute.

q_2 = flow rate in the manifold for which $(H_f)_2$ is being estimated, gallons per minute.

The estimated $(H_f)_2$ will be quite accurate as long as the proportional lengths of the various sizes of pipe in tapered manifolds remain constant and the difference between $(F_s)_1$ and $(F_s)_2$ is less than 0.25. If the lengths and subunit shapes are the same, the discharges can vary over a wide range without reducing the accuracy of the $(H_f)_2$ estimate.

Locating the H_m Line and Estimating $\triangle H'_m$

A graphical technique for estimating the manifold head loss can also be used to estimate $\triangle H'_m$ (the amount the manifold inlet pressure [H_m] differs from the lateral-line inlet pressure [h_l]). The $\triangle HH'_m$ is represented by the distance H_m and a line representing the average manifold pressure (H_a) that lies parallel to the slope. The H_a line is positioned so that the areas between it and the friction curve are the same above and below. To aid in locating the H_a line, place the transparent overlay on a piece of graph paper with one heavy grid line. Adjust the overlay and count squares until the above conditions are satisfied as shown in figure 7–41.

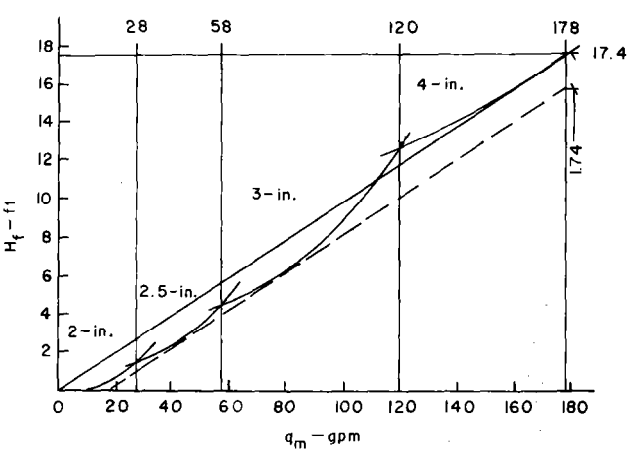

Figure 7–42.—Friction curve overlay demonstrating the graphical solution for using standard manifold curves to design tapered manifolds with a given allowable manifold pressure variation $(\triangle H_m)_a$. H_f = manifold pressure-head loss; q_m = actual flow rate in the manifold.

Sample Designs for Trickle Irrigation Systems

The following sample designs illustrate the procedures of this handbook.

Drip System

The following drip-system design is for a typical deciduous orchard. The data that should be collected before beginning a design are summarized in the trickle-irrigation-design data sheet (fig. 7–43) and the orchard layout map (fig. 7–44).

In addition to illustrating the general process for designing a drip irrigation system, the example emphasizes the following procedures:

1. Selecting the emitter or emission point spacing (S_e), the lateral spacing (S_l), the duration of application (T_a), the number of stations (N), and the average emitter discharge (q_a) and operating pressure head (h_a).
2. Determining $\triangle H_s$, the allowable variation in pressure head that will produce the desired uniformity of emission.
3. Positioning the manifolds and designing the laterals (with both graphical and numerical solutions) for sloping rows.
4. Designing the manifold and selecting economical pipe sizes for both manifolds and main lines.
5. Computing system capacity and total dynamic operating-head requirements.

Design Factors

Before designing the hydraulic network, the designer must determine the emitter spacing (S_e), average emitter discharge (q_a), average emitter pressure head (h_a), allowable head variation ($\triangle H_s$), and hours of operation per season (Q_t).

The steps for developing these factors are outlined in the trickle-irrigation design factors sheet (fig. 7–45). This data sheet serves as a guide and provides a convenient place to record results of the various trial and final computations.

Field observations of trickle irrigation systems in the same area have shown that the wetted diameter produced by 1.0-gph emitters is between 8 and 9 ft. For a continuous wetted strip, the spacing between emitters in the row should not exceed 80 percent of the wetted diameter. Therefore, for the 24-ft tree spacing, a uniform S_e of 6.0 ft was selected. (Table 7–2 can help predict the areas wetted by an emitter; however, field test data and observations at existing systems are preferable.)

Percent area wetted (P_w).—S_e = 6.0 ft, S_w = 8.5 ft (field data), S_p = 24 ft, S_r = 24 ft, e′ = 4.0

$$P_w = \frac{4.0 \times 6 \times 8.5 \times 100}{24 \times 24} \qquad (7\text{–}1)$$

$$P_w = 35.42\%$$

Maximum net depth of application (F_{mn}).—M_{ad} = 30%, WHC = 1.8 in./ft, RZD = 6.0 ft, P_w = 35.42%.

$$F_{mn} = 0.30 \times 1.8 \times 6.0 \times 0.3542 \qquad (7\text{–}4)$$

$$F_{mn} = 1.15 \text{ in}$$

Average peak daily transpiration rate (T_d) and seasonal transpiration rate (T_s).—From *Irrigation Water Requirements*:[5] U = 36.74 in., u_m = 8.83 in. for July, u_d = 8.83/31 = 0.28 in., P_s = 78% (field data).

i) $T_d = 0.28[0.78 + 0.15(1.0 - 0.78)]$ (7–5)

$T_d = 0.23$ in./day

ii) $T_s = U[P_s + 0.15(0.1 - P_s)]$

$= 36.74[0.78 + 0.15(1.0 - 0.78)]$

$T_s = 29.87$ in./yr

Maximum allowable irrigation interval (days) (I_f).—F_n = 1.15 in., T_d = 0.23 in./day.

$$1.15 = 0.23 I_f \qquad (7\text{–}6)$$

$$I_f = 1.15/0.23$$

$$I_f = 5.0 \text{ days}$$

Design irrigation interval (days) (I_f).—I_f = 1 day will be used in developing the design factors, because the actual interval used is a management decision and does not affect the design hydraulics.

Net depth of application (F_n).—T_d = 0.23 in./day, I_f = 1.0 day, assume daily irrigations.

$$F_n = 0.23 \times 1.0 \qquad (7\text{–}6)$$

$$F_n = 0.23 \text{ in.}$$

Emission uniformity (EU).—An emission uniformity of 90 percent is a practical design objective for drip systems on relatively uniform topography.

[5]Soil Conservation Service. 1967. Irrigation Water Requirements. U.S. Dep. Agric. Soil Cons. Serv. Tech. Release 21.

I	Project Name--Happy Green Farm	Date-Winter 1978
II	Land and Water Resources	
	a) Field no.	#1
	b) Field area (acres), A	115.68
	c) Average annual effective rainfall (in.), R_e	3.7
	d) Residual stored soil moisture from off-season precipitation (in.), W_s	0
	e) Water supply (gpm)	800
	f) Water storage (acre-ft)	--
	g) Water quality (mmhos/cm), EC_w	1.4
	h) Water quality classification	Good
III	Soil and Crop	
	a) Soil texture	Silt loam
	b) Available water-holding capacity (in./ft), WHC	1.8
	c) Soil depth (ft)	10
	d) Soil limitations	None
	e) Management-allowed deficiency (%), M_{ad}	30
	f) Crop	Almonds
	g) Plant spacing (ft x ft), $S_p \times S_r$	24 x 24
	h) Plant root depth (ft), RZD	6
	i) Percent area shaded (%), P_s	78
	j) Average daily consumptive-use rate for the month of greatest overall water use (in./day), u_d	0.28
	k) Season total crop consumptive-use rate (in.), U	36.74
	l) Leaching requirement (ratio), LR	0
IV	Emitter	
	a) Type	Vortex
	b) Outlets per emitter	1
	c) Pressure head (psi), h	15.0
	d) Rated discharge @ h (gph), q	1.0
	e) Discharge exponent, x	0.42
	f) Coefficient of variability, v	0.07
	g) Discharge coefficient, k_d	0.32
	h) Connection loss equivalent (ft), f_e	0.4

Figure 7–43.—Drip-system data for a deciduous orchard in the Central Valley of California.

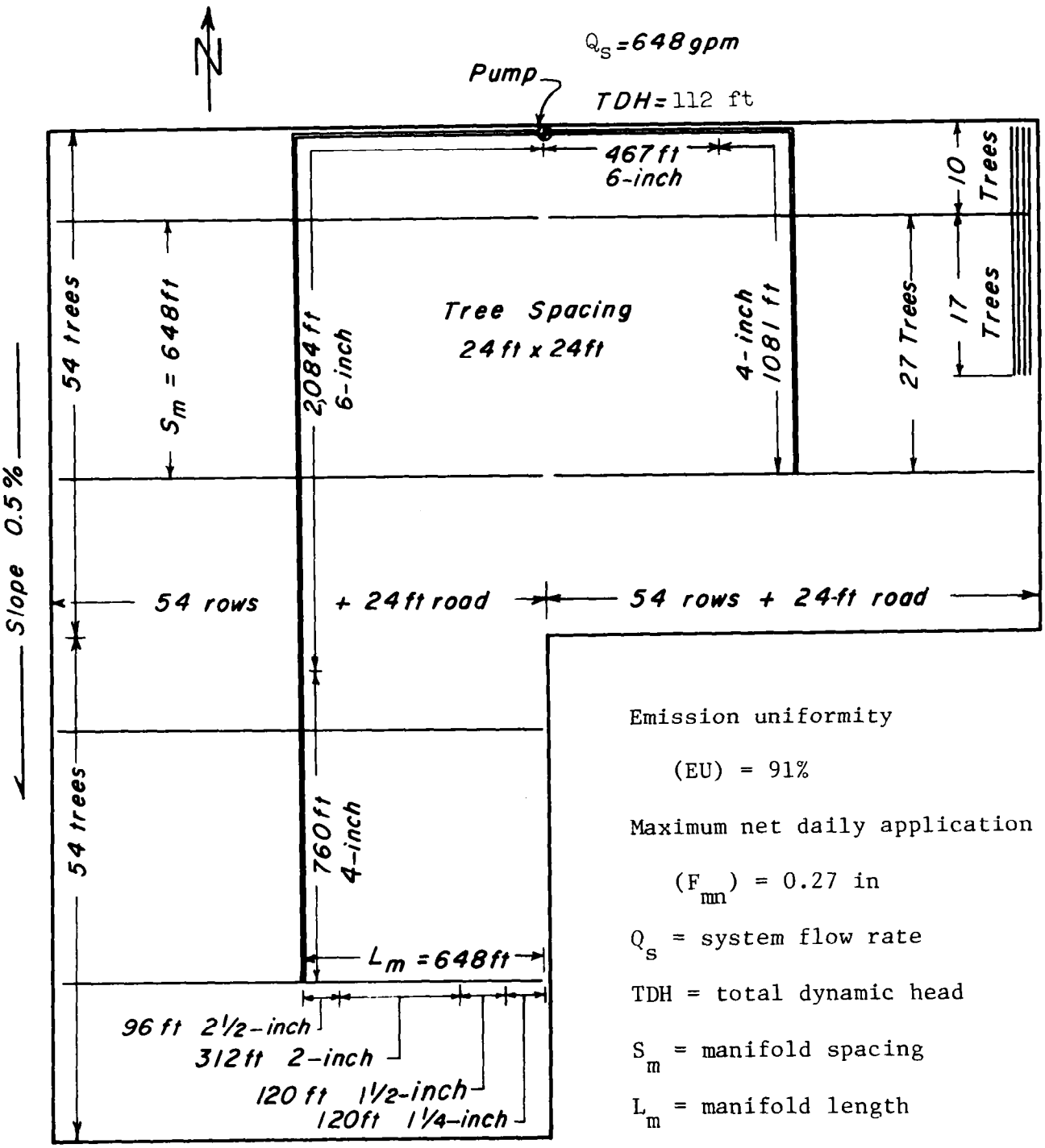

Figure 7–44.—Orchard layout with sample design for a drip irrigation system. (Lateral lines are 0.58-in. polyethylene (PE), manifolds are SDR 26 polyvinyl chloride (PVC), and main lines are SDR 41 PVC.)

I	Project Happy Green Farm	Date-Winter 1978
II	Trial Design	
	a) Emission point layout	St. line
	b) Emitter spacing (ft x ft), S_e x S_l	6 x 24
	c) Emission points per plant, e'	4
	d) Percent area wetted (%), P_w	35.42
	e) Maximum net depth of application (in.), F_{mn}	1.15
	f) Ave. peak-of-application daily transpiration rate (in./day), T_d	0.23
	g) Maximum allowable irrigation interval (days), I_f	5.0
	h) Design irrigation interval (days), I_f	1.0
	i) Net depth of application (in.), F_g	0.23
	j) Emission uniformity (%), EU	90
	k) Gross water application (in.), F_g	0.26
	l) Gross volume of water required per plant per day (gal/day), $F_{(gp/d)}$	93.30
	m) Time of application (hr/day), T_a	23.33
III	Final design	
	a) Time of application (hr/day), T_a	21.0
	b) Design irrigation interval (days), I_f	1.0
	c) Gross water application (in.), F_g	0.26
	d) Average emitter discharge (gph), q_a	1.11
	e) Average emitter pressure head (ft), h_a	44.65
	f) Allowable pressure-head variation (ft), ΔH_s	16.05
	g) Emitter spacing (ft x ft), S_e x S_l	6 x 24
	h) Percent area wetted (%), P_w	35
	i) Number of stations, N	1
	j) Total system capacity (gpm), Q_s	647.37
	k) Seasonal irrigation efficiency (%), E_s	90
	l) Gross seasonal volume (acre/ft), V_i	319.94
	m) Seasonal operating time (hr), Q_t	2,686
	n) Total dynamic head (ft), TDH	112
	o) Emission uniformity (%), EU	91

Figure 7–45.—Drip-system design factors for a deciduous orchard in the Central Valley of California.

Average peak daily transpiration ratio (T_r).—Because the crop is deep rooted and the soil is medium texture, $T_r = 1.00$ as discussed in Gross Water Application under Soil-Plant-Water Considerations.

Leaching requirement ratio (LR_t).—Obtain $EC_w = 1.4$ mmhos/cm from figure 7–43. Obtain min $EC_e = 1.5$ mmhos/cm and max $EC_e = 7$ mmhos/cm from table 7–4 for almonds.

$$\text{i)}\quad LR_t = \frac{1.4}{2(7)} = 0.10 \qquad \textbf{(7–17)}$$

ii) Proper leaching should not reduce yield, because $EC_w <$ min EC_e (see equation 7–15).

Gross water application (F_g).—$T_r = 1.00$, $LR_t = 0.1$, $F_n = 0.23$ in./hr, EU = 90%.

i) When the unavoidable losses are greater than the leaching requirement, i.e., $T_r \geq 1/(1.0 - LR_t)$, or

ii) When $LR_t \leq 0.1$, then extra water for leaching is not required during the peak use period and F_g should be computed by equation 7–8a.

$$\text{iii)}\quad F_g = \frac{0.23 \times 1.00}{0.90} \qquad \textbf{(7–8a)}$$

$$F_g = 0.26 \text{ in.}$$

Gross volume of water required per plant per day [$F_{(gp/d)}$].—$F_g = 0.26$ in., $S_p = 24$ ft, $S_r = 24$ ft, $I_f = 1$ day.

$$F_{(gp/d)} = \frac{0.623 \times 0.26 \times 24 \times 24}{1} \qquad \textbf{(7–9)}$$

$$F_{(gp/d)} = 93.30 \text{ gal/day}$$

Time of application (T_a).—$F_{(gp/d)} = 93.30$ gal/day, $e = 4$, $q_a = 1.0$ gph.

$$\text{i)}\quad T_a = \frac{93.3}{4 \times 1.0} \qquad \textbf{(7–30)}$$

$$T_a = 23.33 \text{ hr/day} > 21.6$$

ii) Adjusting q_a would bring T_a to within the allowable limits, i.e., 90 percent of 24 = 21.6 hr/day. Because $T_a \cong 23$ hr, one station will be used for the system and the q_a will be increased to give 93.3 gal/day in 21.6 hr or less. (If $T_a \cong 12$ hr, two stations can be used, and if $T_a \cong 6$ hr, four stations can be used.)

iii) For added safety and convenience of operation let $T_a = 21.0$ hr.

Average emitter discharge (q_a).—$T_a = 21.0$ hr, $F_{(gp/d)} = 93.3$ gal/day, $e' = 4.0$.

The q_a that will apply the desired volume of water in $T_a = 21.0$ hr is

$$21.0 = \frac{93.3}{4.0\, q_a} \qquad \textbf{(7–30)}$$

$$q_a = \frac{93.3}{4.0 \times 21.0}$$

$$q_a = 1.11 \text{ gph.}$$

Average emitter pressure head (h_a).—$q = 1.0$ gph, $h = 15.0$ psi, $x = 0.42$, $q_a = 1.11$ gph.

i) Compute emitter discharge coefficient (k_d) from the standard emitter flow-rate data given.

$$1.0 = k_d(15.0)^{0.42} \qquad \textbf{(7–20)}$$

$$k_d = 1.0/(15.0)^{0.42}$$

$$k_d = 0.32 \text{ gph/(psi)}^{0.42}$$

ii) The adjusted value of h_a that will give q_a is

$$h_a = \left(\frac{1.11}{0.32}\right)^{1/0.42} \qquad \textbf{(7–31)}$$

$$h_a = 19.33 \text{ psi or } 44.65 \text{ ft.}$$

Allowable pressure-head variation ($\triangle H_s$)—(subunit).—$e' = 4$, $v = 0.07$, $q_a = 1.11$ gph, EU = 90%, $k_d = 0.32$, $x = 0.42$, $h_a = 19.33$ psi.

i) A subunit is that part of the system beyond the last pressure-regulation point; i.e., if a valve is used to adjust the inlet pressure to a manifold that has no other pressure regulator, the area served by the manifold is a subunit. The object is to limit the pressure variation within a subunit so that actual emission uniformity (EU) will equal or exceed the assumed value of EU.

ii) Rearranging equation 7–33a, the minimum permissible flow, q_n, is

$$q_n = \frac{1.11 \times 90/100}{1.0 - (0.07 \times 1.27/\sqrt{4})}$$

$$q_n = 1.05 \text{ gph.}$$

iii) The minimum permissible pressure head (h_n) that would give q_n is

$$h_a = \left(\frac{q_a}{k_d}\right)^{1/x} \qquad \textbf{(7–31)}$$

$$q_n = q_a\left(\frac{h_n}{h_a}\right)^x \qquad \textbf{(7–38)}$$

$$\left(\frac{q_n}{q_a}\right) = \left(\frac{h_n}{h_a}\right)^x = > h_n = h_a\left(\frac{q_n}{q_a}\right)^{1/x}$$

$$h_n = \left(\frac{q_a}{k_d}\right)^{1/x}\left(\frac{q_n}{q_a}\right)^{1/x}$$
$$= \left(\frac{q_n}{k_d}\right)^{1/x}$$
$$= (1.05/0.32)^{1/0.42}$$
$$h_n = 16.93 \text{ psi.}$$

iv) Therefore, the allowable variation in pressure head for the subunit, $\triangle H_s$, is

$$\triangle H_s = 2.5(19.33 - 16.93) \quad \textbf{(7–34)}$$
$$\triangle H_s = 6.0 \text{ psi or } 13.86 \text{ ft.}$$

Total system capacity (Q_s).—A = 115.7 acres, q_a = 1.11 gph, n = 1.0, S_e = 6 ft, S_l = 24 ft.

$$Q_s = \frac{726 \times 115.7 \times 1.11}{1.0 \times 6 \times 24} \quad \textbf{(7–35b)}$$
$$Q_s = 648 \text{ gpm}$$

Seasonal irrigation efficiency (E_s).—EU = 90%, obtain T_R = 1.00 from table 7–3, LR_t = 0.10.

i) The seasonal irrigation efficiency is the product of EU/100, the expected efficiency of irrigation scheduling, and the inverse of the proportions of the applied water that may be lost to runoff, leaching, or evaporation, or any combination of the three.

ii) Because a commercial scheduling service will be employed for this operation and little runoff, leakage, or evaporation is anticipated:

$$T_R < 1/(1.0 - LR_t).$$

iii) Considering the above, the seasonal irrigation efficiency (E_s) will be

$$E_s = 90\%. \quad \textbf{(7–11)}$$

Gross seasonal volume (V_i).—U = 36.74 in., R_e = 3.7 in., W_s = 0, P_s = 78%, E_s = 90%, A = 115.68 acres, LR_t = 0.1

i) The annual net depth of application [$F_{(an)}$] is

$$F_{(an)} = 33.04[0.78 + 0.15(1.0 - 0.78)] \quad \textbf{(7–10)}$$
$$F_{(an)} = 26.9 \text{ in.}$$

ii) The gross seasonal volume of irrigation water required (V_i) is

$$V_i = \frac{26.9 \times 115.7}{12(1 - 0.1)90/100} \quad \textbf{(7–14)}$$
$$V_i = 320 \text{ acre-ft.}$$

Seasonal operating time (Q_t).—V_i = 320 acre-ft, Q_s = 648 gpm.

$$Q_t = \frac{5{,}430 \times 320}{648} \quad \textbf{(7–37)}$$
$$Q_t = 2{,}682 \text{ hr}$$

Lateral Line Design and System Layout

The procedure for designing a lateral line involves determining the manifold spacing and lateral characteristics, manifold position, lateral inlet pressure, and pressure difference along the laterals.

The procedure for selecting the manifold spacing is presented under Lateral Line Design. It is convenient to have the same spacing throughout the field.

Manifold spacing (S_m).—S_p = 24 ft, S_e = 6 ft, q_a = 1.11 gph, ID = 0.58 in.; from Appendix B, J = 5.73 ft/100 ft; f_e = 0.4 ft; from table 7–6, F = 0.36; $\triangle H_s$ = 16.05 ft, S_p = 24 ft.

i) Inspection of the orchard layout shows that three manifolds, each serving rows of 54 trees, would be the fewest to meet the criteria, i.e., two manifolds for the west 80 acres and one manifold for the east 40 acres.

ii) The difference in pressure head ($\triangle$h) for the level laterals serving 27 trees on either side of each manifold can be calculated as follows:

$$l = 27 \times 24$$
$$l = 648 \text{ ft,}$$

and

$$q_l = \frac{648}{6} \times \frac{1.11}{60} \quad \textbf{(7–62)}$$
$$q_l = 2.00 \text{ gpm.}$$

Taking into account the added roughness from the emitter connections to the laterals,

$$J' = 5.73\left(\frac{6.0 + 0.4}{6.0}\right) \quad \textbf{(7–51b)}$$
$$J' = 6.11 \text{ ft/100 ft.}$$

Therefore,

$$\triangle h = h_f = 6.11 \times 0.36 \times 6.48 \qquad (7\text{–}52)$$
$$\triangle h = 14.26 \text{ ft.}$$

iii) This $\triangle h$ is considerably greater than 0.5 $\triangle H_s$ and would leave too little margin for differences in pressure head in the manifold.

The lateral length that would produce $h = 0.5\triangle H_s$ and $\triangle H_s = 8.03$ ft can be found directly by using the 14.26-ft head loss computed for the 648-ft-long lateral by equation 7–65b.

$$l = 648\left(\frac{8.03}{14.26}\right)^{1/2.75}$$
$$l = 526 \text{ ft (about 22 trees)}$$

This would give a manifold spacing of

$$S_m = 2 \times 22 \times 24 = 1{,}056 \text{ ft.}$$

Thus, the west 80 acres of the field could be supplied by three manifolds, but the east half would need two manifolds.

iv) Construction was simplified and improved by selecting six equally spaced manifolds so that

$$S_m = 27 \times 24 = 648 \text{ ft.}$$

Thus, l will be 324 ft, and the head difference along each pair of laterals can be estimated by again using the 14.26-ft head loss computed for a 648-ft-long lateral in equation 7–65a.

$$h_f \cong 14.24\left(\frac{324}{648}\right)^{2.75}$$
$$h_f \cong 2.1 \text{ ft.}$$

Graphical determination of manifold position and $\triangle h$.—$J' = 6.11$ ft/100 ft, $F = 0.36$; $S = 0.5\%$, so $\frac{\triangle El}{L/100} = 0.5$; $\triangle H_s = 16.05$ ft; $J'F = 2.20$ ft/100 ft, $L/100 = 6.48$ ft.

i) Now compute J'F for a single lateral equal in length to the manifold spacing (S_m).

This was already done (see previous section, Manifold spacing [S_m], part ii, for l = 648 ft, in which

$$J'F = 6.11 \times 0.36 = 2.20).$$

Thus, 10 on the vertical scale of the overlay represents $J'F = 2.20$.

ii) Place an overlay on figure 7–31 and trace the friction curve (solid line) and the vertical lines on both the right and left sides of the figure, as shown in figure 7–46.

For use of the 0-to-10 dimensionless scale, values from a specific problem must be multiplied by (10/J'F).

iii) Next, draw a line representing the ground surface on the overlay. The left end of this ground-surface line should pass through zero on the vertical scale at x/L = 0 and the right end (at x/L = 1) should pass through

$$\left(\frac{\triangle El}{L/100}\right)' = \frac{10}{2.20} \times 0.5 \qquad (7\text{–}66)$$

$$\left(\frac{\triangle El}{L/100}\right)' = 2.27,$$

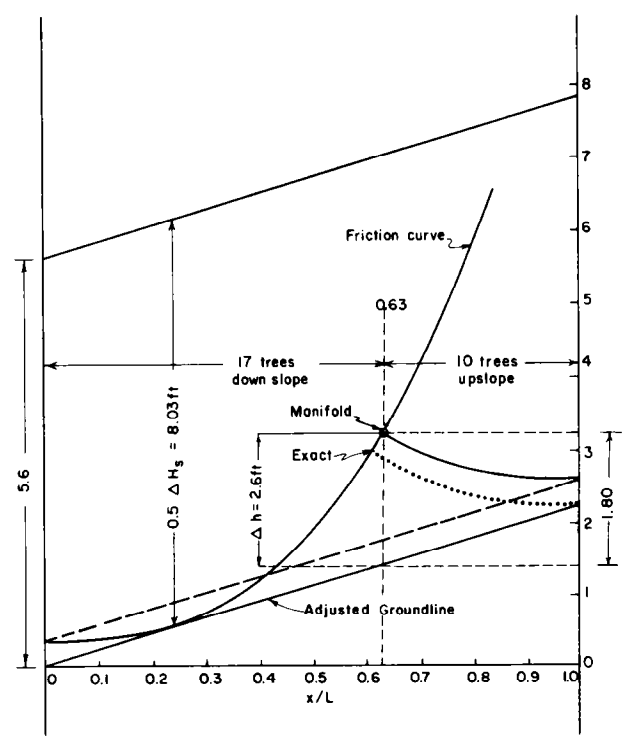

Figure 7–46.—Friction curve overlay to demonstrate graphical solution of manifold positioning and $\triangle h$ (difference in pressure head along the lateral). $\triangle H_s$ = allowable subunit pressure-head variation; x = position of manifold along lateral; L = length of lateral.

on figure 7–32, as shown by the dashed sloped line on figure 7–46.

Draw a line parallel to the groundline and tangent to the friction curve. Make sure this line intersects both vertical axes. This is the adjusted groundline, which is the solid straight line on figure 7–46.

A reasonable maximum allowable difference in pressure head along the pair of laterals is 0.5 $\triangle H_s$, as discussed earlier. This is represented by a line parallel to and above the adjusted groundline on the overlay. To represent this allowable pressure head, plot a line the following distance (number of units) above the adjusted groundline as shown in figure 7–46.

$$\text{Units} = \frac{10}{2.2}\left(\frac{0.5 \times 16.05}{6.48}\right) = 5.6$$

iv) To locate the best manifold position, move the overlay down on figure 7–31 until the dashed friction curve coincides with the adjusted groundline at x/L = 1.0.

v) This "exact" manifold position is at x/L = 0.61, where the dashed friction curve intersects the friction curve on the overlay as shown on figure 7–46. This position falls between the 16th and 17th trees from the lower end of the downslope lateral:

at 16 trees,

$$x/L = \frac{16 \times 24}{648} = 0.59,$$

and at 17 trees,

$$x/L = \frac{17 \times 24}{648} = 0.63.$$

The pressure at the upper end of the upslope lateral can be kept above the adjusted groundline by placing the manifold with 17 trees on the downslope laterals and 10 trees on the upslope laterals. To represent this manifold position, move the overlay so that the upslope (dotted) friction curve crosses the friction curve on the overlay at x/L = 0.63 as shown by the solid line in figure 7–46.

vi) The maximum variation in pressure head ($\triangle h$) along the pair of laterals is represented by the maximum distance that the upslope and downslope curves are above the adjusted groundline. Taking values from the overlay for the manifold at x/L = 0.63 and allowing for the scale factor:

$$\frac{\triangle h}{L/100} = \frac{2.20}{10} \times 1.80 \qquad \textbf{(7–66)}$$
$$\frac{\triangle h}{L/100} = 0.40,$$

and

$$\triangle h = 0.40 \times 6.48$$
$$\triangle h = 2.6 \text{ ft.}$$

vii) Because uniform manifold spacings have been chosen and the field has a uniform slope, the manifold position and the head loss in the average lateral, $\triangle h$ = 2.6 ft, will be the same for each subunit.

Numerical determination of manifold position and $\triangle h$.—J = 5.73 ft/100 ft, J′ = 6.11 ft/100 ft, F = 0.36, S = 0.5%; J = 0.5 ft/100 ft, J′F = 2.20 ft/100 ft; x/L = 17 trees/27 trees = 0.63, L/100 = 6.48 ft.

i) Determine J′F as in step 1 of the graphical solution.

ii) Find the tangent location (Y) by

$$Y = (0.5/6.11)^{1/1.75} \qquad \textbf{(7–67)}$$
$$Y = 0.24.$$

iii) Next, solve for the unusable slope component (S′) (see figure 7–34):

$$S' = (0.5 \times 0.24) - 2.20(0.24)^{2.75} \qquad \textbf{(7–68)}$$
$$S' = 0.08.$$

iv) The manifold position can now be located by satisfying equation 7–69. To satisfy the equation, first determine the term on the left:

$$\frac{S - S'}{J'F} = \frac{0.5 - 0.08}{2.20} = 0.19,$$

and then by trial and error find the x/L that balances the equation, i.e.:

$$(0.62)^{2.75} - (1 - 0.62)^{2.75} = 0.20.$$

v) The value of x/L = 0.62 falls between the 16th and 17th trees from the lower end. Thus, as discussed earlier, the manifold should be located to supply 17 trees along the downslope laterals and 10 trees along the upslope laterals.

vi) The maximum pressure-head variation ($\triangle h$) along the pair of laterals can be determined from equation 7–70 by use of the x/L value that represents the actual manifold location selected:

$$\triangle h = 6.48[2.20(0.63)^{2.75} + 0.08 - (0.5 \times 0.63)]$$
$$\triangle h = 2.5 \text{ ft.}$$

To check for the possibility that the maximum $\triangle h$ may occur at the closed end of the downslope lateral, determine

$$\triangle h_c = 0.08 \times 6.48 \qquad \textbf{(7–71a)}$$
$$\triangle h_c = 0.5 \text{ ft.}$$

Lateral inlet pressure head (h_l).—h_a = 44.65 ft, h_{fp} = 14.26 ft, z = x/L = 0.63, $\triangle El$ = 3.24 ft.

For pairs of laterals with a constant diameter, the lateral inlet pressure can be determined by equation 7–63a as

$$h_l = 44.65 + 0.75(14.26)[(0.63)^{3.75} + (1 - 0.63)^{3.75}] - (3.24/2)[2(0.63) - 1]$$
$$h_l = 44.65 + 2.15 - 0.42 = 46.4 \text{ ft.}$$

Manifold Design

Selecting pipe size for tapered manifolds involves three criteria:

1. A balance between the pipe's initial cost and the pumping cost over the pipe's expected life (described under Pipeline Hydraulics).
2. A balance between friction loss, change in elevation, and allowable variation in pressure.
3. Maximum permissible velocity.

Pipe sizes selected on the basis of economics are considered acceptable if variations in pressure do not exceed allowable limits. If limits of pressure variation are exceeded, the manifold is tapered by balancing the allowable limit with pipe friction and change in elevation. However, the maximum permissible velocity controls minimum pipe size regardless of the other criteria.

Manifold length and main-line position.

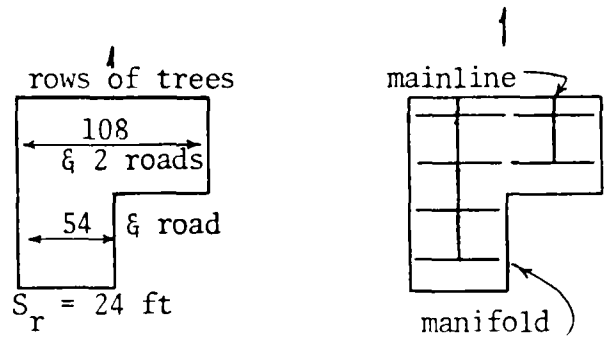

i) For economic reasons and for acceptable $\triangle H$, pairs of manifolds extending in opposite directions from a common main-line connection normally should not exceed a total length of 1,500 ft. Therefore, parallel main lines are needed.

ii) Main lines should be positioned so that starting from a common main-line connection, the minimum pressure in a pair of manifolds is equal (like the manifold position for pairs of laterals as discussed earlier). Because the ground is level in the direction of the laterals, the pair of laterals should be of equal length.

iii) There are access roads in place of the center row of trees in the west 80 acres and in the east 40 acres. Therefore, the length of each manifold is

$$L_m = 27 \times 24 = 648 \text{ ft.}$$

Manifold flow rate (q_m).—q_l = 1.0 gpm, and for a pair of laterals, q_{lp} = 2.0 gpm.

The manifold flow rate is the number of pairs of laterals along each manifold times the flow rate per pair:

$$q_m = 27 \times 2.0 = 54 \text{ gpm.}$$

Economic-chart method of manifold design.—Q_t = 2,686 hr, P_{uc} = \$0.0436/kWh, CRF = 0.205 (20% for 20 yr), EAE = 1.594 (9% inflation), E_p = 75%; BHP/P_u = 1.2 BHP-hr/kWh (taking into consideration the motor transformer and line deficiencies, a power conversion factor of 1.2 is reasonable); P_c = 1.00, Q_s = 54 gpm; q_m = 54.0 gpm, q_{lp} = 2.0; L_m = 648 ft; $\triangle H_s$ = 16.05 ft; $\triangle h'$ = 2.6 ft, from the graphical solution for lateral lines;

$l_1 = 648$ ft, $l_2 = 552$ ft, $l_3 = 240$ ft, $l_4 = 120$ ft;
$q_1 = 54.0$ gpm, $F_1 = 0.38$, $q_2 = 46.0$ gpm, $F_2 = 0.38$,
$q_3 = 20.0$ gpm, $F_3 = 0.41$, $q_4 = 10.0$ gpm, $F_4 = 0.47$.

i) All manifolds in the system serve similar areas, and extra pressure head can be used to reduce sizes of the pipe in all of these.

Therefore, the manifold flow rate (q_m) will be adjusted and used as the adjusted system flow (Q_s') to select the most economical pipe sizes.

ii) First compute the cost per water horsepower per season by equation 7–57:

$$C_{whp} = \frac{2{,}686 \times 0.0436 \times 1.594}{(75/100)(1.2)}$$

$$C_{whp} = \$207/\text{whp per year.}$$

iii) Determine the adjustment factor (A_f) to adjust Q_s to Q_s' for entering the proper unit economic pipe-size selection chart:

$$A_f = \frac{0.001 \times 207}{0.205 \times 1.00} = 1.01, \qquad \textbf{(7–58)}$$

and

$$Q_s' = 1.01 \times 54 \qquad \textbf{(7–59)}$$
$$Q_s' = 55 \text{ gpm.}$$

iv) The maximum pressure in this and most other typical trickle systems is less than 100 psi. Thus PVC pipe with the minimum available (or allowable) pressure rating can be used. Figure 7–33 is the unit economic pipe-size selection chart for this set of PVC pipe sizes.

Enter the vertical axis of figure 7–33 with $Q_s' = 55$ gpm. Record the flow rate (horizontal axis) where the 55-gpm line intersects the upper limit of each pipe size region, which is:

Pipe size	Chart flow rate	Adjusted[1] flow rate	Number of outlets
	gpm	gpm	
1¼-in.	10.5	$q_4 = 10.0$	5
1½-in.	20.2	$q_3 = 20.0$	10
2-in.	45.0	$q_2 = 46.0$	23
2½-in.	54.0	$q_1 = 54.0$	27

[1]Flow rates adjusted for nearest whole number of lateral connections.

v) Compute the length of pipe of each size, assuming uniform outlet discharge along the entire length of the manifold by:

$$L_{1\frac{1}{4}} = \frac{10.0 - 0}{54.0} \times 648 = 120 \text{ ft} \qquad \textbf{(7–78)}$$

$$L_{1\frac{1}{2}} = \frac{20.0 - 10.0}{54.0} \times 648 = 120 \text{ ft}$$

$$L_2 = \frac{46.0 - 20.0}{54.0} \times 648 = 312 \text{ ft}$$

$$L_{2\frac{1}{2}} = 648 - (120 + 120 + 312) = 96 \text{ ft}$$

vi) Determine the allowable difference in manifold pressure head:

$$(\triangle H_m)_a = 16.05 - 2.6 = 13.5 \text{ ft,} \qquad \textbf{(7–73)}$$

and check this against $\triangle H_m$. To do this, first determine the head loss from pipe friction (H_f), and because there is no slope along the manifold, $H_f = \triangle H_m$ equals the friction loss along the manifold $[(h_f)_m]$.

The numerical method for determining H_f is as follows:

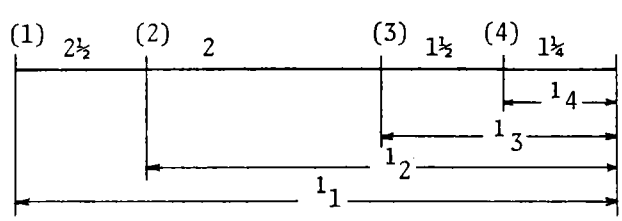

$$H_f = (h_f)_{2\frac{1}{2}} + (h_f)_2 + (h_f)_{1\frac{1}{2}} + (h_f)_{1\frac{1}{4}}.$$

For 2½-in., $J_1 = 1.36$, $J_2 = 1.02$, and

$$(h_f)_{2\frac{1}{2}} = \frac{1}{100}(J_1F_1l_1 - J_2F_2l_2)$$
$$= \frac{1}{100}[(1.36 \times 0.38 \times 648) - (1.02 \times 0.38 \times 522)]$$
$$(h_f)_{2\frac{1}{2}} = 1.21 \text{ ft.}$$

For 2-in., $J_2 = 2.55$, $J_3 = 0.58$, and

$$(h_f)_2 = \frac{1}{100}(J_2F_2l_2 - J_3F_3l_3)$$
$$= \frac{1}{100}[(2.55 \times 0.38 \times 552) - (0.58 \times 0.41 \times 240)]$$
$$(h_f)_2 = 4.78 \text{ ft.}$$

For 1½-in., $J_3 = 1.69$, $J_4 = 0.50$, and

$$(h_f)_{1\frac{1}{2}} = \frac{1}{100}(J_3F_3l_3 - J_4F_4l_4)$$
$$= \frac{1}{100}[(1.69 \times 0.41 \times 240) - (0.50 \times 0.47 \times 120)]$$
$$(h_f)_{1\frac{1}{2}} = 1.38 \text{ ft.}$$

For 1¼-in., $J_4 = 0.95$ and

$$(h_f)_{1\frac{1}{4}} = \frac{1}{100}(J_4F_4l_4)$$
$$= \frac{1}{100}(0.95 \times 0.47 \times 120)$$
$$(h_f)_{1\frac{1}{4}} = 0.54 \text{ ft.}$$

The field is level, so $H_f = \triangle H_m$ and

$$\triangle H_m = (h_f)_{2\frac{1}{2}} + (h_f)_2 + (h_f)_{1\frac{1}{2}} + (h_f)_{1\frac{1}{4}}$$
$$= 1.21 + 4.78 + 1.38 + 0.54$$
$$\triangle H_m = 7.91 \text{ ft.}$$

The graphical method for determining H_f is as follows:

Because the flow rate per outlet along the manifold (q_l) = 2.0 gpm, use figure 7–36 to make the overlay figure 7–47 as described in step 6b of the Economic-Chart Design Method under Manifold Design.

The scale factor for converting graph values plotted from figure 7–36 is

$$k = 648/54(0.1) = 1.2 \qquad \textbf{(7–79a)}$$

Therefore, by equation 7–80,

$$H_f = 1.2(6.6) = 7.9 \text{ ft,}$$

which is almost identical with the value obtained numerically.

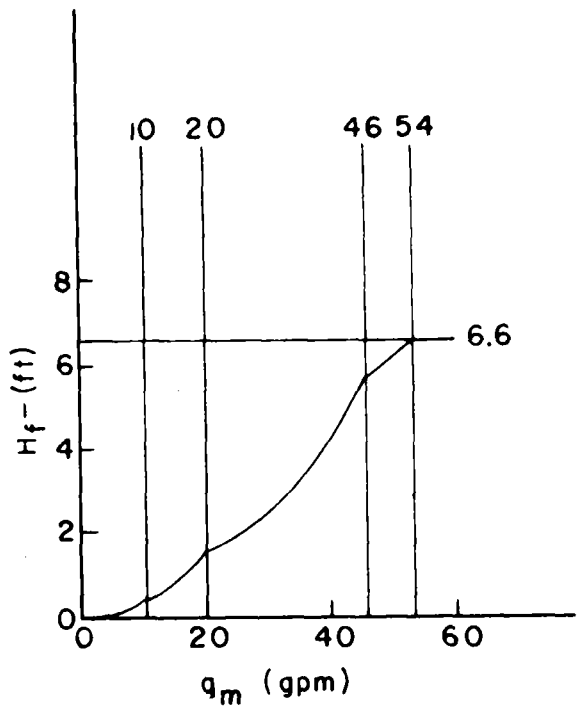

Figure 7–47.—Friction curve overlay to demonstrate graphical solution for determining manifold friction loss (H_f) for a drip system. q_m = manifold flow rate.

This value is less than $(\triangle H_m)_a = 13.5$ ft. Therefore pipe sizes selected by economic criteria are acceptable.

Manifold inlet pressure (H_m).—$h_l = 46.4$ ft, $\triangle H_m = 7.9$ ft; $\triangle H'_m = 0.5H_f + 0.5\triangle El$, $\triangle H'_m = (0.5)(7.9) + 0$, $\triangle H'_m = 4.0$.

$$H_m = 46.4 + 4.0 = 50.4 \text{ ft} \qquad \textbf{(7–76a)}$$

Main-Line Design

Selecting pipe size for main lines is based on economic, pressure, and velocity criteria. After the initial pipe sizes are selected from an economic chart, additional savings are often possible in branching systems by reducing pipe sizes along specific branches to the limits imposed by pressure or velocity criteria. In such cases, sizes may be reduced to take advantage of any excess pressure head that might result from differences in elevation or from higher pressures required for other branches of the system.

Economic pipe-size selection.—Q_s = 432 gpm, A_f = 1.01.

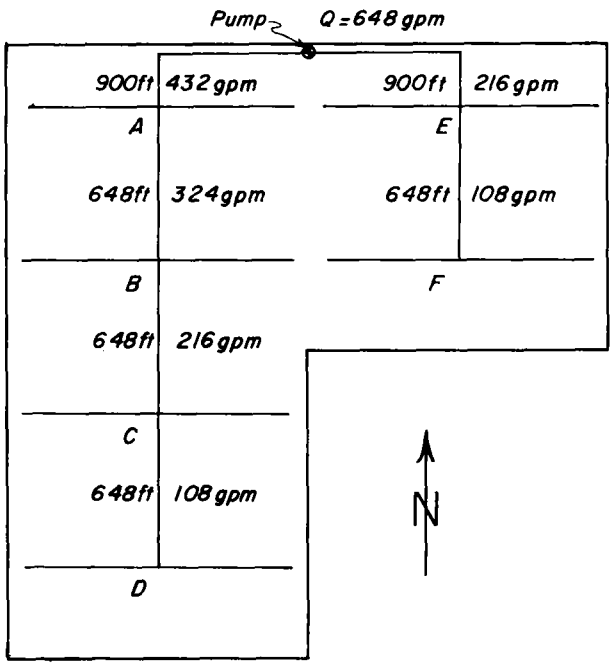

i) First sketch the main-line layout, indicating lengths of pipe and rates of flow along the various sections of pipe.

ii) The unit economic pipe-size selection chart, figure 7–33, is used to select the first set of main-line pipe sizes. Because the flow is divided immediately after the pump, the larger of the two branch flow rates must be adjusted for entering the chart:

$$Q_s' = 1.01 \times 432 \qquad \textbf{(7–59)}$$
$$Q_s' = 436 \text{ gpm.}$$

iii) Enter the vertical axis of figure 7–33 with 436 gpm and determine the most economical size of PVC pipe for each flow section. To hold velocities below 5 ft/s, stay within the solid boundary lines. After selecting the minimum pipe sizes, determine the friction loss in each section as shown in the following table based on equation 7–52.

Sect.	Flow (gpm)	Pipe (in.)	J'	$\frac{L}{100}$	h_f (ft)
P–A	432	6	0.90	9.00	8.10
A–B	324	6	0.54	6.48	3.50
B–C	216	6	3.26	6.48	1.68
C–D	108	4	0.47	6.48	3.05
P–E	216	6	0.26	9.00	2.34
E–F	108	4	0.47	6.48	3.05

Location of critical manifold inlet.

i) Compute the pressure head required to overcome pipe friction and elevation difference $(H_{fe})_m$ between the pump and each manifold inlet point by using equation 7–60 as follows:

Point	From–to	Inlet (ft)	+	Section H_f (ft)	±	$\triangle$El (ft)	=	Point $(H_{fe})_m$ (ft)
A	P–A	P=0	+	8.10	–	1.20	=	6.90
B	A–B	6.90	+	3.50	–	3.24	=	7.16[1]
C	B–C	7.16	+	1.68	–	3.24	=	5.60
D	C–D	5.60	+	3.05	–	3.24	=	5.41
E	P–E	P=0	+	2.34	–	1.20	=	1.14
F	E–F	1.14	+	3.05	–	3.24	=	0.95

[1]Critical.

ii) The $(H_{fe})_m$ values in (i) show that the critical manifold inlet is at point B, and the pump must supply $(H_{fe})_m$ = 7.16 ft to overcome pipe friction and elevation along the main lines. Because the manifolds require the same inlet pressure head, if the required H_m = 50.4 ft is supplied at point B, all other requirements for manifold inlet pressure head will be more than satisfied.

iii) Furthermore, the above $(H_{fe})_m$ values clearly show that the pipe sizes in sections B–C and P–E can be reduced or trimmed without increasing the system head requirements.

Reducing main-line pipe size.—$(H_{fe})_m$ = 7.16 ft, $(H_{fe})_C$ = 5.60 ft; J_4 = 1.65, J_6 = 0.26; $(H_{fe})_D$ = 5.41 ft before tapering section B–C; $(H_{fe})_E$ = 1.14 ft before tapering section P–E; J_4 = 1.65, J_6 = 0.26, L_{P-E} = 900 ft.

i) The pipe sizes between the pump and the critical manifold inlet cannot be trimmed without increasing the pump head requirements. However, the pipe sections downstream from the critical inlet point and along other branches can be trimmed so that the corresponding manifold inlet points also require $(H_{fe})_m$ = 7.16 ft.

ii) The gain in pressure head between B and C is:

$$(\triangle H)_{B-C} = 7.16 - 5.60 = 1.56 \text{ ft}$$

This unnecessary gain in pressure head can be eliminated to reduce pipe costs by replacing some of the 6-in. pipe with 4-in. pipe in section B–C. The exact length of the smaller pipe (L_s) that will increase the head loss by $\triangle H$ is

$$(L_4)_{B-C} = \frac{(\triangle H)_{B-C}}{J_4 - J_6} \times 100 \qquad \textbf{(7-61)}$$

$$= \frac{1.56 \times 100}{1.65 - 0.26}$$

$$(L_4)_{B-C} = 112 \text{ ft.}$$

iii) With 536 ft of 6-in. and 112 ft of 4-in. pipe in section B–C, the H_{fe} at point C will increase to the system $(H_{fe})_m = 7.16$ ft. The $(H_{fe})_m$ will also increase by 1.56 ft at point D, which gives $(H_{fe})_D = 6.97$ ft. This value is so close to the system $(H_{fe})_m$ that further tapering would require a short length of 3-in. pipe, which might actually increase the system cost because of the additional pipe size, extra fittings, and more complicated construction.

iv) Using the same logic and procedures along the east branch of the system, for $(H_{fe})_m = 7.16$ ft, the friction loss in the 6-in. pipe between P and E can be increased by

$$(\triangle H)_{P-E} = 7.16 - 1.14 = 6.02 \text{ ft,}$$

and the length of 4-in. pipe taper in section P–E from equation 7–61 should be

$$(L_4)_{P-E} = \frac{6.02 \times 100}{1.65 - 0.26}$$

$$(L_4)_{P-E} = 433 \text{ ft.}$$

So the remaining length of 6-in. pipe in section P–E should be

$$(L_6)_{P-E} = 900 - 433 = 467 \text{ ft.}$$

Total Dynamic Head

The total dynamic head (TDH) required of the pump is the sum of the following:

Item		ft
(1)	Manifold inlet pressure head ..... H_m =	50.4
(2)	Pressure head to overcome pipe friction and elevation along the main line. H_{fe} =	7.2
(3)	Suction friction loss and lift	10.0[1]
(4)	Filter—maximum pressure-head differential	23.1[2]
(5)	Valve and fitting friction losses:	
	Fertilizer injection	—[3]
	Flow meter	3.0[4]
	Main control valves	0.5[4]
	Manifold inlet valve and pressure regulator	6.9[4]
	Lateral risers and hose bibs	2.3[4]
	Safety screens at manifold or lateral inlets	2.3[4]
	Lateral or header pressure regulators ..	—[5]
(6)	Friction-loss safety factor at 10 percent ..	6.6[6]
(7)	Additional pressure head to allow for deterioration of emitters	—[7]
Total		112.3

[1]Assumed value that includes suction screen, friction in suction pipe and foot valve, and elevation from water surface to pump discharge.

[2]Automatic back-flushing filter to be set to flush when pressure differential reaches 10 psi.

[3]Injection pump used.

[4]Taken from manufacturer's or standard charts.

[5]Not used in this system.

[6]Friction-loss safety factor taken as 10 percent of lateral (2.1 ft), manifold (7.9 ft), main line (18.0 ft), and filter (23.1 ft), plus friction losses from valves and fittings.

[7]The flow characteristics of the vortex emitters used in this design are not expected to change with time.

System Design Summary

The final system-design layout is shown in figure 7–44. The design data are presented in figures 7–43 and 7–45. These three figures, along with a brief writeup of the system specifications and a bill of materials, form the complete design package.

For scheduling irrigation, the emission uniformity, the net system application rate, and the peak daily net system application should be:

Final emission uniformity (EU).—$x = 0.42$, $H_m = 50.4$ ft, $\triangle H_m = 7.87$ ft, $\triangle h = 2.68$ ft, $h_a = 44.65$ ft; $e' = 4$, $v = 0.07$.

i) Compute the ratio of minimum emitter discharge to average emitter discharge in a subunit by equations 7–38 and 7–39:

$$q_n/q_a = \left[\frac{50.4 - 7.9 - 2.7}{44.6}\right]^{0.42}$$

$$q_n/q_a = 0.95.$$

ii) Assuming all the manifolds to be adjusted to the same inlet pressures, final or actual expected system EU will be

$$EU = 100(1 - \frac{1.27}{\sqrt{4}}[0.07])0.95 \quad \textbf{(7-33a)}$$
$$EU = 91\%.$$

Net application rate (F_n).—S_p = 24 ft, S_r = 24 ft, e = 4, q_a = 1.11 gph, EU = 93%.

$$F_n = 1.604 \times \frac{93}{100} \frac{(4 \times 1.11)}{(24 \times 24)} \quad \textbf{(7-40)}$$
$$F_n = 0.0115 \text{ in./hr}$$

Maximum net daily application rate (F_{mn}).—After a breakdown, the system may be operated 24 hr/day to make up for lost irrigation time. The maximum net daily application rate is

$$F_{mn} = 0.0115 \times 24 = 0.28 \text{ in.}$$

Spray System

The following spray design is for a typical citrus grove. The data that should be collected before beginning a design are summarized in the trickle irrigation design sheet, figure 7–48, and the field layout map, figure 7–49.

In addition to illustrating the general process for designing a spray irrigation system, the example emphasizes the following procedures:

1. Manifold spacing for multistation systems.
2. Economic pipe sizing for tapered manifolds (both graphical and adjusted economic-chart method solutions) on a rectangular field.
3. Pipe sizing for tapered manifolds on a nonrectangular field.

Sample design computations developed under Drip System are presented more briefly in this section.

Design Factors

The values obtained for the spray design factors are presented in figure 7–50. Details for computing most of these values, except the percent area wetted, have already been presented under Drip System.

The particular spray emitter selected wets a "butterfly"-shaped pattern that can be approximated by a circle with two 40° pie-shaped wedges cut out. The wedges are opposite each other and result from water being deflected by supports that hold a deflection cap above a vertical nozzle. The diameter of the wetted circle and the nozzle's discharge are both functions of the operating pressure. From information provided by the manufacturer, the emitter exponent and coefficient of discharge are x = 0.556 and k_d = 1.89, respectively, and the relation between pressure and wetted diameter is plotted as shown in figure 7–51.

Percent area wetted (P_w).—Diameter of surface area taken from figure 7–50 is 14.5 ft; for fine sandy (coarse)-textured soil, s_e' = 2.0 ft; e = 1, S_p = 15 ft, S_r = 25 ft.

i) The surface area (A_s) wetted directly by the spray at the rated pressure of 25 psi is

$$A_s = \frac{(14.5)\pi}{4} \times \frac{280}{360}$$
$$A_s = 128.43 \text{ ft}^2.$$

ii) The total wetted soil area is larger than the surface area wetted because there is some outward soil water movement, as shown in figure 7–20. The total wetted soil area can be estimated by adding one-half of the S_e' value for homogeneous soils taken from table 7–2 to the perimeter of the wetted surface soil (PS). For the "butterfly"-type wetting patterns, PS can be assumed equal to the circumference of the full circle.

$$PS = 14.5\pi = 45.55 \text{ ft.}$$

iii) From equation 7–3,

$$P_w = \frac{1[128 + (2.0/2 \times 46)]}{15 \times 25} \times 100$$
$$P_w = 46.40\%$$

This represents an acceptable design.

Computations for design.

i) $$F_{mn} = \frac{30}{100} \times 0.7 \times 6.0 \times \frac{46.40}{100} \quad \textbf{(7-4)}$$
$$F_{mn} = 0.58 \text{ in.}$$

ii) $$T_d = 0.25[\frac{75}{100} \times 0.15(1.0 - \frac{75}{100})] \quad \textbf{(7-5)}$$
$$T_d = 0.20 \text{ in./day}$$

iii) $I_f = 0.58/0.20 = 2.9$ days

I	Project Name--Florida Spray Design	Date-Fall 1978
II	Land and Water Resources	
	a) Field no.	#1
	b) Field area (acres), A	32.23
	c) Average annual effective rainfall (in.), R_e	39.0
	d) Residual stored soil moisture from off-season precipitation (in.), W_s	1.0
	e) Water supply (gpm)	Pit
	f) Water storage (acre-ft)	--
	g) Water quality (mmhos/cm), EC_w	0.3
	h) Water quality classification	Excellent
III	Soil and Crop	
	a) Soil texture	Fine sand
	b) Available water-holding capacity (in./ft), WHC	0.7
	c) Soil depth (ft)	10
	d) Soil limitations	None
	e) Management-allowed deficiency (%), M_{ad}	30
	f) Crop	Citrus
	g) Plant spacing (ft x ft), S_p x S_r	15 x 25
	h) Plant root depth (ft), RZD	6
	i) Percent area shaded (%), P_s	75
	j) Average daily consumptive-use rate for the month of greatest overall water use (in./day), u_d	0.25
	k) Season total crop consumptive-use rate (in.), U	48.0
	l) Leaching requirement (ratio), LR_t	0.02
IV	Emitter	
	a) Type	280° spray
	b) Outlets per emitter	1
	c) Pressure head (psi), h	25.0
	d) Rated discharge @ h (gph), q	11.3
	e) Discharge exponent, x	0.556
	f) Coefficient of variability, v	0.042
	g) Discharge coefficient, k_d	1.89
	h) Connection loss equivalent (ft), f_e	0.4

Figure 7–48.—Spray-system data for a citrus grove in Florida.

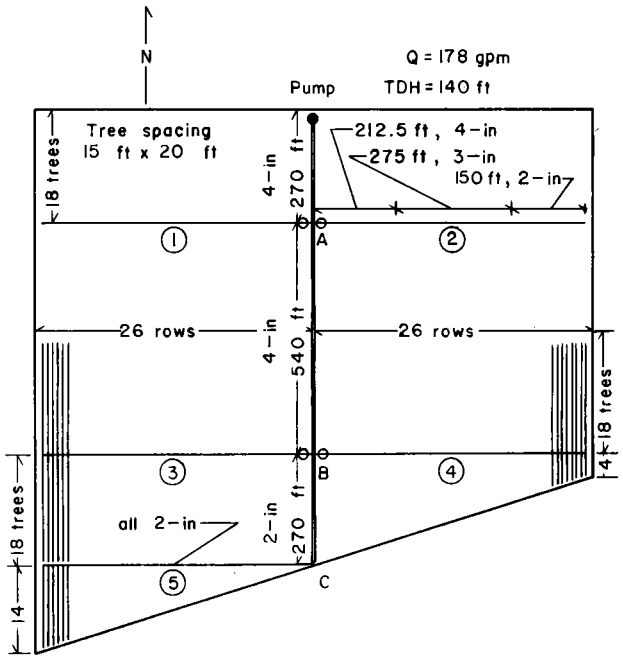

Figure 7–49.—Citrus grove with spray irrigation system. Lateral lines are 0.70-in. polyethylene and manifolds and main lines are polyvinyl chloride pipe.

iv) $F_n = 0.20 \times 1.0 = 0.20$ in. **(7–6)**

v) From table 7–4,

max $EC_c = 8$ mmhos

$$LR_t = \frac{0.3}{2(8)} = 0.02. \quad \textbf{(7–17)}$$

vi) $T_r = 1.00$, assumed EU = 90%.

$$F_g = \frac{0.20 \times 1.00}{90/100} = 0.22 \text{ in.} \quad \textbf{(7–8a)}$$

vii) $$F_{(gp/d)} = \frac{0.623 \times 0.22 \times 15 \times 25}{1} \quad \textbf{(7–9)}$$

$F_{(gp/d)} = 51.40$ gal/day

viii) $$T_a = \frac{51.40}{1.0 \times 11.3} = 4.55 \text{ hr/day} \quad \textbf{(7–30)}$$

Round off to 4.5 hr/day and use N = 4 to give 18 hr/day operation.

ix) From equation 7–30 (rearranged),

$$q_a = \frac{51.40}{1.0 \times 4.5} = 11.42 \text{ gph.}$$

x) $$h_a = \left(\frac{11.42}{1.89}\right)^{1/0.556} \quad \textbf{(7–31)}$$

$h_a = 25.41$ psi or 58.70 ft.

xi) From equation 7–33a (rearranged),

$$q_n = \frac{11.42 \times 90/100}{1.0 - (0.042 \times 1.27\sqrt{1.0})}$$

$q_n = 10.86$ gph.

By equations 7–31 and 7–38,

$$h_n = \left(\frac{10.86}{1.89}\right)^{1/0.556} = 23.20$$

$$\triangle H_s = 2.5(25.41 - 23.20) \quad \textbf{(7–34)}$$

$\triangle H_s = 5.53$ psi or 12.76 ft.

xii) $$Q_s = 726 \times \frac{32.23}{4} \times \frac{11.42}{15 \times 25} \quad \textbf{(7–35)}$$

$Q_s = 178$ gpm.

Seasonal irrigation efficiency (E_s).—EU = 90%, $LR_t = 0.02$.

i) Entering table 7–3 midway between the coarse and very coarse soil-texture columns for humid zones and for root depth over 5 ft plus 0.05 for spray emitters gives

$T_R = 1.20$.

ii) Because $T_R \geq 1/(1.0 - LR_t)$, i.e., $1.20 \geq 1/(1 - 0.02) = 1.02$, use equation 7–12 to compute E_s as

$$E_s = \frac{90}{1.20(1.0 - 0.02)}$$

$E_s = 76.5\%$.

Gross seasonal volume (V_i).—U = 48.0 in., R_e = 39.0 in., W_s = 1.0 in., U − R_e − W_s = 8.0 in.

i) The annual net depth of application from equation 7–10 is

$$F_{an} = 8.0\left[\frac{75}{100} + 0.15\left(1.0 - \frac{75}{100}\right)\right]$$

$F_{an} = 6.3$ in.

ii) From equation 7–14,

I	Project Name--Florida Spray Design	Date-Fall 1978
II	Trial Design	
	a) Emission point layout	St. line
	b) Emitter spacing (ft x ft), S_e x S_l	15 x 25
	c) Emission points per plant, e	1
	d) Percentage area wetted (%), P_w	46.40
	e) Maximum net depth of application (in.), F_{mn}	0.58
	f) Ave. peak transpiration rate (in./day), T_d	0.20
	g) Maximum allowable irrigation interval (days), I_f	2.9
	h) Design irrigation interval (days), I_f	1
	i) Net depth of application (in.), F_n	0.20
	j) Emission uniformity (%), EU	90
	k) Gross water application (in.), F_g	0.22
	l) Gross volume of water required per plant per day (gal/day), $F_{(gp/d)}$	51.40
	m) Time of application (hr/day), T_a	4.55
III	Final Design	
	a) Time of application (hr/day), T_a	4.50
	b) Design irrigation interval (days), I_f	1.0
	c) Gross water application (in.), F_g	0.22
	d) Average emitter discharge (gph), q_a	11.42
	e) Average emitter pressure head (ft), h_a	58.70
	f) Allowable pressure-head variation (ft), ΔH_s	12.75
	g) Emitter spacing (ft x ft), S_e x S_l	15 x 25
	h) Percent area wetted (%), P_w	46
	i) Number of stations, N	4
	j) Total system capacity (gpm), Q_s	178
	k) Seasonal irrigation efficiency (%), E_s	76.5
	l) Gross seasonal volume (acre-ft), V_i	22.0
	m) Seasonal operating time (hr), Q_t	689
	n) Total dynamic head (ft), TDH	140
	o) Actual uniformity (%), EU	90
	p) Net water-application rate (in./hr), F_n	0.044

Figure 7-50.—Spray-system design factors for a citrus grove in Florida.

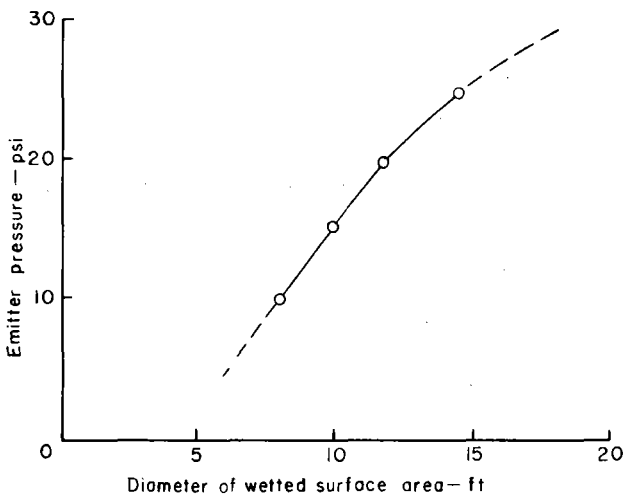

Figure 7–51.—Plot of spray diameter vs. emitter pressure developed from manufacturer's data for 0.04-in.-diameter orifice.

$$V_i = \frac{6.3 \times 32.23}{12(76.5/100)(1 - 0.02)}$$
$$V_i = 22.6 \text{ acre-ft.}$$

iii) From equation 7–37,

$$Q_t = \frac{5{,}430 \times 22.6}{178}$$
$$Q_t = 689 \text{ hr.}$$

Lateral Line Design and System Layout

Lateral-line design procedures are essentially the same for drip and spray irrigation systems. The design procedure includes determining the manifold spacing, the manifold layout, and the maximum pressure-head variation along the laterals.

Manifold spacing (S_m).—S_p = 15 ft; l = 270 ft, $S_e = S_p$ = 15 ft, q_a = 11.43 gph; J = 14.69 from Appendix B, F = 0.39 from table 7–6, f_e = 0.5 ft from figure 7–20; $\triangle H_s$ = 12.76 ft; J = 6.01, f_e = 0.4.

i) There must be at least one manifold for each of the four stations (N = 4) determined in the design factor computations.

The tree rows run north and south, and there is no dominant slope. Therefore, the manifolds should run east and west. No adjustments in manifold position are necessary to compensate for slope effects.

ii) A main line can be placed running north-south midway between the east and west boundaries of the grove. There are 52 rows of trees with an average of 72 trees per row. Two pairs of manifolds plus a fifth manifold for the small triangular section in the southwest corner can be laid out to divide the field into four equal stations, as shown in figure 7–49.

iii) The spacing between the pairs of manifolds and the length of laterals in the rectangular sections is

$$S_m = (72 \times 15)/2 = 540 \text{ ft.}$$

iv) The pressure head difference ($\triangle h$) for the level laterals having 0.58-in. hose and serving 18 trees to either side of each manifold is

$$q_l = \frac{270}{15}\,\frac{11.43}{60} \qquad \textbf{(7–62)}$$
$$q_l = 3.43 \text{ gpm.}$$

From equations 7–51b and 7–52,

$$J' = 14.69\frac{15 + 0.5}{15} = 15.18 \text{ ft/100 ft,}$$

and

$$h_f = 15.18 \times 0.39 \times 270/100$$
$$h_f = 15.98 \text{ ft.}$$

v) This exceeds $0.5\triangle H_s$ = 6.38 ft. Either the laterals must be shortened or larger diameter pipe used. For $h_f \leq$ 6.38 ft, the maximum length of a 0.58-in.-diameter lateral by equation 7–65b is

$$l_b = 270\left(\frac{6.38}{15.98}\right)^{1/2.75} = 193.36 \text{ ft.}$$

This requires dividing the field to operate with either three or six stations. Neither arrangement is satisfactory, because three stations would operate only 13.5 hr/day and six stations would operate 27 hr/day.

vi) Repeating part (iv) with 0.7-in. hose gives

$$J' = 6.01\left(\frac{15 + 0.4}{15}\right) = 6.17 \text{ ft/100 ft}$$
$$h_f = 6.17 \times 0.39 \times 270/100$$
$$h_f = 6.50 \text{ ft.}$$

This is close enough to 6.38 ft to be acceptable for the four-station layout shown in figure 7–49.

Manifold layout.

i) Because the field is nearly level, the manifolds should be laid out to serve laterals of equal length on both sides (except in the triangular areas), as shown in figure 7–49.

ii) The operating sequence for the four stations is:

Station	Manifold	Q_s (gpm)
I	(1)	178
II	(2)	178
III	(3)	178
IV	(4 & 5)	144 + 34 = 178

The flow rates are perfectly balanced as all stations require the same Q_s = 178 gpm.

Maximum variation of lateral pressure head ($\triangle h$).—Because the field is nearly level, $\triangle h = h_f$ = 6.50 ft.

Lateral inlet pressure head (h_l).—$\triangle El$ = 0.0 ft, h_a = 58.70 ft, h_f = 6.50 ft (for a single lateral).

For pairs of constant-diameter laterals on level fields, the lateral inlet pressure head can be determined by equation 7–63c, in which the h_f of one single lateral of the pair is known:

$$h_l = h_a + 3/4\ h_f + \frac{\triangle El}{2}$$
$$= 58.70 + 3/4\ (6.50)$$
$$h_l = 63.58 \text{ ft.}$$

Manifold Design

Typically, manifolds are tapered and should have no more than four pipe sizes, with the diameter of the smallest pipe no less than half that of the largest pipe. Manifold pipe size for rectangular subunits can be selected either by the economic-chart method or by the graphical method. For rectangular subunits both the economic-chart method and the alternative graphical method are quick, but only the general graphical method is suitable for tapered manifolds on trapezoidal subunits. In the following example, all three methods will be compared for the design of the rectangular subunits.

Manifold length and main-line position.—S_r = 25 ft, n_r = 52/2 = 26.

i) Because the field is nearly level, the main line should be placed in the center of the field and should supply equal-length manifolds to the east and west.

ii) Because there are 52 rows of trees across the field and no roadway (or missing tree row) along the main line, the manifold length (L_m) by equation 7–75 is

$$L_m = 25(26 - 1/2) = 637.5 \text{ ft.}$$

Allowable manifold pressure-head difference [$(\triangle H_m)_a$].—$\triangle h$ = 6.50 ft, $\triangle H_s$ = 12.76 ft.

$$(\triangle H_m)_a = 12.76 - 6.50 \qquad (7\text{–}73)$$
$$(\triangle H_m)_a = 6.26 \text{ ft.}$$

Manifold flow rates (q_m).

Manifold	q_m (gpm)
(1)	178
(2)	178
(3)	178
(4)	144
(5)	34

Economic-chart method for rectangular subunits.—E_p = 75%, seasonal operation is 689 hr/year, P_{uc} = \$0.0436/kWh, BHP-hr/kWh = 1.2; from table 7–8, EAE = 1.594, CRF = 0.205 for n = 20 years and i = 20%, P_c = \$1.00/lb; q_l = 3.43 gpm, and for a pair of laterals, q_{lp} = 6.86 gpm; L_m = 637.5 ft, q_m = 178 gpm.

i) Details for using the economic pipe-size selection chart for manifold design are presented under Manifold Design, and an example of the computational procedure is presented under Drip System in Samples of Trickle Irrigation System Designs.

ii) An adjusted system flow rate (Q_s') must be computed for entering the economic pipe-size selection chart, figure 7–33. The steps to compute Q_s' are from equation 7–57:

$$C_{whp} = \frac{689 \times 0.0436 \times 1.594}{75/100 \times 1.2}$$
$$C_{whp} = \$53.20/\text{whp per year;}$$

and from equation 7–58:

$$A_f = \frac{0.001 \times 53.20}{0.205 \times 1.00}$$
$$A_f = 0.26.$$

For the rectangular subunits that are served by manifolds (1), (2), and (3), the system and manifold

flow rates are equal:

$$Q_s = q_m = 178 \text{ gpm}.$$

Therefore, from equation 7–77,

$$Q_s' = 0.26 \times 178 = 46 \text{ gpm}.$$

iii) Selecting the pipe sizes and computing the manifold pressure-head variation ($\triangle H_m$) gives

4-in.	112.5 ft
3-in.	300 ft
2½-in.	50 ft
2-in.	175 ft

and

$$\triangle H_m = H_f = 9.2 \text{ ft}.$$

iv) Because $\triangle H_m = 9.2$ ft exceeds $(\triangle H_m)_a = 6.26$ ft, the set of pipe sizes must be increased. The most economical mixture of pipe sizes that will give $\triangle H_m \cong 6$ ft can be obtained by modifying Q_s' and repeating the procedures used in step (iii).

The modified system flow rate, by equation 7–82a, is

$$Q_s'' = \frac{9.21}{6.26}(46) = 68 \text{ gpm}.$$

Enter figure 7–33 with 68 gpm to obtain:

Pipe size (in.)	Chart (gpm)	Adjusted (gpm)	Outlet no.
2	40	41	6
2½	50	48	7
3	120	117	17
4	178	178	26

The computed lengths by equation 7–78a and friction losses from figure 7–37 are:

Pipe size (in.)	Length (ft)	H_f (ft)	Weight (lb)
2	150	1.40	63
2½	25	0.28	15
3	250	2.94	186
4	212.5	1.92	209
Total	637.5	6.54	473

From equation 7–81a for the flat field, $\triangle H_m = H_f = 6.5$ ft. Valves within 10 percent of $(\triangle H_m)_a = 6.26$ ft are close enough so further adjustment is not required. When this calculated value of $\triangle H_m$ exceeds the 10-percent limit, the pipe sizes can be adjusted by inspection or another cut can be made by adjusting Q_s''.

v) Because there is very little 2½-in. pipe called for, replacing it with 3-in. pipe would probably be more economical. This would reduce the final pipe array to:

Pipe size (in.)	Length (ft)	H_f (ft)	Weight (lb)
2	150	1.40	63
3	275	3.05	204
4	212.5	1.92	209
Total	637.5	6.37	476

and

$$\triangle H_m = H_f = 6.4 \text{ ft}.$$

vi) An example of the graphical method for obtaining H_f is presented in figure 7–52. Because $q_{lp} = 6.86$ gpm, the standard manifold curves presented in figure 7–37 were used. By equation 7–79a,

$$k = (637.5/178)(0.1)$$
$$k = 0.36.$$

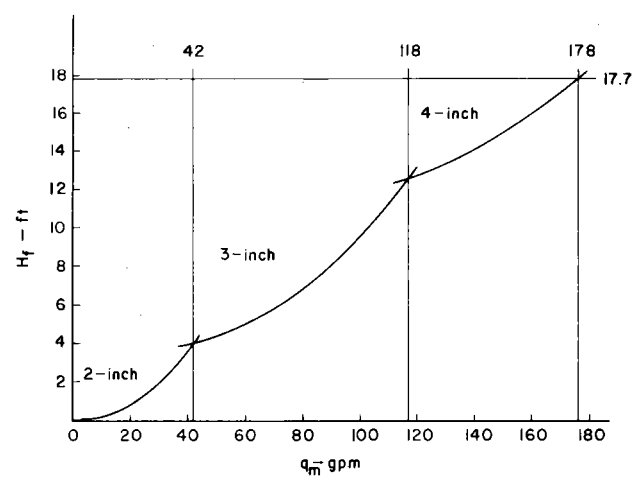

Figure 7–52.—Friction curve overlay to demonstrate graphical solution for determining manifold friction loss (H_f) for a spray system. q_m = manifold flow rate.

From figure 7–51, $H_f = 17.7$ ft, and by equation 7–80,

$$H_f = 0.36(17.7) = 6.37 \text{ ft.}$$

(For more details see figure 7–47 under Drip System.)

General graphical method, rectangular subunits.—From table 7–6, F = 0.38 for 26 outlets; because the subunit is rectangular, $S_f = 1$ by equation 7–83, $F_s = 1$ by equation 7–84, and $F' = F = 0.38$; $(\triangle H_m)_a = 6.26$ ft, $L_m = 647.5$ ft.

i) From the first trial of the economic-chart method, it is apparent that 4-, 3-, 2-1/2-, and 2-in. pipe should be considered.

ii) Determine the JF′ values for each of these pipe sizes for a flow rate of $q_m = 178$ gpm. Using J values from Appendix B:

Pipe size (in.)	J	JF′
4	1.17	0.42
3	4.19	1.59
2-1/2	11.60	4.41
2[1]	28.97	11.09

[1]The J value for the 2-in. pipe was estimated from the J = 28.09 given in Appendix B for the highest flow, at Q = 175 gpm, by

$$J = 28.09\left(\frac{178}{175}\right)^{1.8} \qquad (7\text{–}85)$$

iii) The rectangular units have a shape factor, $F_s = 1$. Therefore, the scalar JF′ ratios for plotting friction curves for the various-sized pipe are given in the middle column of table 7–9. To construct a dimensionless plot containing a set of curves scaled to represent each of the four sizes of pipe, multiply the scalar JF′ ratios from table 7–9 by the above JF′ values to obtain table 7–10.

iv) Plot x/L vs. the scaled JF′ values given in table 7–10, as shown in figure 7–39. The resulting curves are the dimensionless friction curves scaled for each pipe size under consideration.

v) Determine the dimensionless allowable head-loss ratio by equation 7–86:

$$j = \frac{(\triangle H_m)_a}{L_m/100} = \frac{6.26}{637.5/100} = 0.98.$$

This represents the allowable pipe-friction loss on the same proportional scale as the pipe friction curves of figure 7–39.

vi) Place a transparent overlay on figure 7–39 and trace the horizontal and vertical scales and boundaries, as shown on figure 7–40.

Draw a sloping line through the origin and through j = 0.98 at x/L = 1.0, then draw a second sloping line parallel to the first and passing through

$$0.9j = 0.9 \times 0.98 = 0.88$$

at x/L = 1.0, as shown by the dashed line on figure 7–40.

vii) The combination of pipe diameters and lengths that will give a solution close to the most economical solution with a $\triangle H_m = 6.26$ ft will have a friction curve defined by the two sloping lines. The procedure for drawing the composite curve shown on figure 7–40 is given in the Manifold Design section (see step 8 of the General Graphical-Design Method).

viii) A summary of the general graphical design for manifolds (1), (2), and (3) is:

Pipe size (in.)	Length (ft)	Weight (lb)
2	118	50
2½	89	55
3	223	165
4	207.5	204
Totals	637.5	474

and $\triangle H_m = H_f = 6.3$ ft.

Notice that the total weight (and consequently the cost) of the pipe is essentially the same as determined by the economic chart method, but the lengths of the pipes of various sizes are somewhat different.

Alternative graphical method.—k = 0.36, $(\triangle H_m)_a = 6.26$ ft, $q_m = 178$ gpm.

i) In the alternative graphical method, figure 7–38 is used in place of constructing figure 7–39, and the method is applicable only for rectangular subunits. The alternative method saves the time required to construct figure 7–39.

ii) First compute j′ by equation 7–87 to properly scale $(\triangle H_m)_a$:

$$j' = \frac{6.26}{0.36} = 17.4 \text{ ft.}$$

iii) Following steps 6′, 7a′, and 8′ of the Alternative Graphical-Design Method under Manifold

Design, construct figure 7–42. This construction procedure is similar to the procedure that was used to produce figure 7–40.

iv) A summary of the alternative graphical design for manifolds (1), (2), and (3) is:

Pipe size (in.)	Flow range (gpm)	Length (ft)
2	0–28	100
2½	28–58	107.5
3	58–120	222
4	120–178	208
Total		637.5

and $\triangle H_m = H_f = 6.3$ ft.

A sample computation (for the length of 4-in. pipe) by equation 7–79 is

$$L_4 = \frac{(178 - 120)}{178} 637.5 = 208 \text{ ft.}$$

Graphical method, nonrectangular subunits.— From figure 7–44, for manifold (4) $(n_p)_c = 22$ plants and $(n_p)_a = (22 + 36)/2 = 29$ plants, for manifold (5) $(n_p)_c = 14$ plants and $(n_p)_a = (14 + 0)/2 = 7$ plants; $q_a = 11.43$ gph, $S_e = S_p$, $(q_l)_4 = (11.43 \times 29)/60$, $(q_l)_5 = (11.43 \times 7)/60$; $(S_f)_4 = 0.76$; from table 7–6, $F = 0.38$; $(F_s)_4 = 0.88$; $(q_m)_2 = 144$ gpm, $(q_m)_1 = 178$ gpm, $(F_s)_1 = 1.0$, $(F_s)_2 = 0.88$; $F' = 0.59$; from Appendix B, $J = 1.54$ for 34.67 gpm in 2-in. pipe.

i) Manifolds (4) and (5) serve nonrectangular subunits. For manifold (4), the shape factor is

$$(S_f)_4 = \frac{22}{29} = 0.76 \qquad \textbf{(7–83)}$$

and for manifold (5), it is

$$(S_f)_5 = \frac{14}{7} = 2.0.$$

ii) In manifold (4), which serves 26 tree rows, the flow rate is

$$(q_m)_4 = \frac{11.43 \times 29}{60} \times 26$$
$$(q_m)_4 = 143.64 \text{ gpm,}$$

and for manifold (5) it is

$$(q_m)_5 = \frac{11.43 \times 7}{60} \times 26$$
$$(q_m)_5 = 34.67 \text{ gpm.}$$

iii) The general graphical design procedure for nonrectangular subunits is the same as for rectangular subunits. However, the F factors from table 7–6 must be adjusted and the x/L vs. scalar F′J ratios must be selected as outlined in the Manifold Design section of Design Procedures for Trickle Irrigation Systems.

iv) From figure 7–38 the shape adjustment factor for manifold (4) is $F_s = 0.88$; therefore, the adjusted pipe-friction reduction coefficient is

$$F' = 0.88 \times 0.38 = 0.34.$$

A summary of the graphical design results for manifold (4) is:

Pipe size (in.)	Length (ft)	Weight (lb)
2	236	99
2½	76	47
3	226	168
4	99.5	98
Totals	637.5	412

and $\triangle H_m = H_f = 6.3$ ft.

If the pipe sizes and lengths used for manifolds (1), (2), and (3) are also used for manifold (4), the approximate $\triangle H_m$ can be computed by equation 7–89 as

$$(H_f)_2 = \frac{637.5}{637.5}\left(\frac{0.88}{1.0}\right)\left[\frac{144}{178}\right]^{1.8} \times 6.3$$
$$(H_f)_2 = 3.8 \text{ ft} \cong (H_f)_4 = (\triangle H_m)_4.$$

This leaves 2.5 ft of extra pressure head, which cannot be used beneficially, that requires about 62 lb more pipe. The simplification of construction, however, that results from having manifolds (1) through (4) all the same, plus the savings in design effort, should more than offset the material cost difference.

v) For manifold (5), which serves a triangular subunit ($F_s = 1.54$ and $F' = 0.59$), an analysis by the graphical method for manifold (5) yields:

Pipe size (in.)	Length (ft)	Weight (lb)
1¼	100	21
1½	80	22
2	377	158
2½	80.5	50
Totals	637.5	251

and $\triangle H_m = H_f = 6.3$ ft.
For simplicity of design and better flushing capability, manifold (5) could be constructed of all 2-in.-diameter pipe. This would give

$$(\triangle H_m)_5 = 0.59 \times 1.54 \times 6.375 \qquad \textbf{(7–84)}$$
$$(\triangle H_m)_5 = 5.79 \text{ ft.}$$

The weight with all 2-in. pipe is 268 lb. The slightly higher cost of materials would be more than offset by eliminating the two sizes of pipe (1¼- and 1½-in.) from the project.

Simplifying the bill of materials, field layout, and installation by minimizing the number of pipe sizes used is important. The cost savings afforded by doing this are significant. Therefore, the recommended final design is:

Manifolds (1) through (4) use 150 ft of 2-in. pipe, 275 ft of 3-in. pipe, and 212.5 ft of 4-in. pipe as shown in part (v) of the section on the economic-chart method.

Manifold (5) uses all 2-in. pipe. This will require only:

Manifold number	Extra pipe (lb)
(1)	2
(2)	2
(3)	2
(4)	64
(5)	17
Total	87

This extra pipe will cost $87, based on $1.00/lb.

Manifold inlet pressure (H_m).—$h_l = 63.6$ ft, $(\triangle H_m)_1 = 6.4$ ft (3 pipe sizes), $(\triangle H'_m)_1 = 0.5(6.4) = 3.2$ ft; $(\triangle H_m)_5 = 5.8$ ft (all 2-in.), $(\triangle H'_m)_5 = 0.75(5.8) = 4.4$ ft.

i) For manifolds (1), (2), and (3),

$$H_m = 63.6 + 3.2 = 66.8 \text{ ft.} \qquad \textbf{(7–76a)}$$

ii) For manifold (5),

$$H_m = 63.6 + 4.4 = 68.0 \text{ ft.}$$

Main-Line Design

Selecting pipe sizes for main lines is based on economic, pressure, and velocity criteria. A detailed example of the use of the economic-chart method of main-line design was presented under Drip System. Therefore, only a summary of the design procedure will be presented here.

Economic pipe-size selection.

i) The highest main-line friction loss will occur at Station IV when manifolds (4) and (5) are in operation. (This is obvious, because all stations have the same flow rate, and the field is nearly level.)

When Station IV is operating, the flow is:

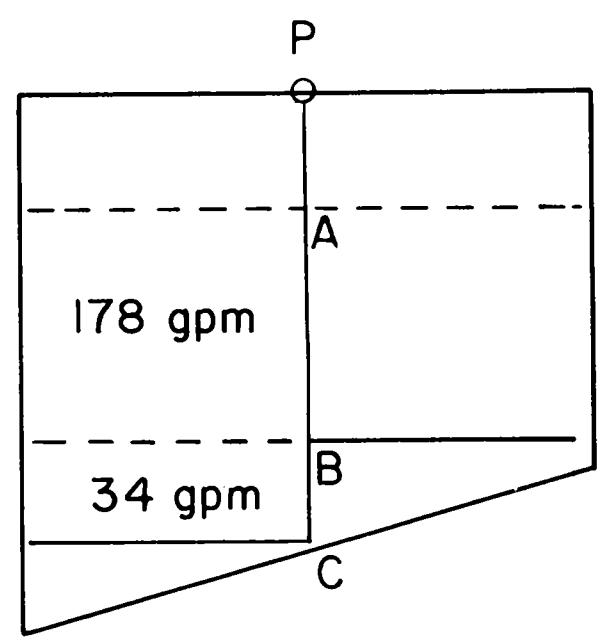

ii) Compute the h_f for each main-line pipe section. Use the economic pipe-size selection chart, figure 7–33, and equation 7–52 with J values from Appendix B. (The value of $Q'_s = 46$ gpm was computed for the manifold design in the section on the economic-chart method for rectangular subunits part [ii].)

Section	Flow (gpm)	Pipe (in.)	J	$\frac{L}{100}$	h_f (ft)
P–A	178	4	1.17[1]	2.70	3.16
A–B	178	4	1.17[1]	5.40	6.32
B–C	34	2	1.54	2.70	4.16

[1]Pipe selection controlled by 5 ft/s velocity restriction.

iii) The pressure head required to overcome pipe friction and elevation differences with $\triangle El = 0$ $[(H_{fe})_m]$ between the pump and each manifold is:

Point	Section From–to	Inlet (ft)	+	h_f (ft)	=	Point $(H_{fe})_m$ (ft)
A	P–A	0		8.0		8.0
B	A–B	8.0		6.3		14.3
C	B–C	14.3		2.7		17.0

Total Dynamic Head

The total dynamic head (TDH) required of the pump is the sum of the following pressure-head requirements:

	Item	ft[1]
(1)	Manifold (5) inlet pressure head	68.0
(2)	Pressure head to overcome pipe friction and elevation along the main line	17.0
(3)	Suction line, friction and lift	10.0
(4)	Filter—maximum pressure differential	23.1
(5)	Valve and fitting friction losses:	
	Fertilizer injection	—
	Flowmeter	3.0
	Main-line control valve	—
	Manifold inlet valve and pressure regulator	7.5
	Lateral risers and hose bibs	2.3
	Safety screens at manifold or lateral inlets	2.3
	Lateral or header pressure regulators	—
(6)	Friction loss safety factor at 10 percent	6.8
(7)	Additional pressure head to allow for emitter deterioration	—
Total		140.0

[1]See Drip System for comments.

System Design Summary

The final design layout is shown in figure 7–49. The design data are presented in figures 7–48 and 7–50. These three figures, along with a brief write-up of system specifications and a bill of materials, form the complete design package.

For irrigation scheduling the emission uniformity, net system application rate, and peak daily net system application should be:

Final emission uniformity (EU).—$H_m = 66.8$, $\triangle H_m = 6.4$, $\triangle h = 6.5$, $h_a = 58.7$, $x = 0.556$; for manifolds (1), (2), and (3), $v = 0.042$, $e = 1$.

i) Compute the ratio of the minimum emitter discharge to average emitter discharge by equations 7–38 and 7–39:

$$q_n/q_a = \left[\frac{66.8 - 6.4 - 6.5}{58.7}\right]^{0.556}$$

$$q_n/q_a = 0.95.$$

ii) If all manifolds are adjusted to have the same inlet pressure,

$$EU = 100[1 - (\frac{1.27}{\sqrt{1}} \times 0.042)]0.95 \qquad \textbf{(7–33a)}$$

$$EU = 90\%.$$

Net application rates (F_n and F_{mn}).—$S_p = 15$ ft, $S_r = 25$ ft, $e = 1$, $q_a = 11.43$ gph.

i) $$F_n = 1.604(\frac{90 \times 1 \times 11.43}{100 \times 15 \times 25}) \qquad \textbf{(7–40)}$$

$$F_n = 0.044 \text{ in./hr}$$

ii) After a system breakdown, each of the four stations can be operated 6 hr/day to give

$$F_{mn} = 0.044 \times 6$$

$$F_{mn} = 0.26 \text{ in./day.}$$

Line-Source System

The following line-source system design is for a typical field of staked tomatoes in Texas. The data that should be collected before beginning a design are summarized in the trickle irrigation design sheet, figure 7–53, and the field layout map, figure 7–54.

In addition to illustrating the general process of line-source irrigation design, the example emphasizes the following procedures:

1. Calculation of emission uniformity for line-source tubing.
2. Graphical design of downhill manifold so that friction slope closely follows ground slope.

The design computations that follow are made as brief as possible except for concepts that have not already been dealt with under Drip System and Spray System.

I	Project Name--Texas Line-Source Design	Date-Spring 1978
II	Land and Water Resources	
	a) Field no.	#1
	b) Field area (acres), A	4.70
	c) Average annual effective rainfall (in.), R_e	1.0
	d) Residual stored soil moisture from off-season precipitation (in.), W_s	0
	e) Water supply (gpm)	200+
	f) Water storage (acre-ft)	---
	g) Water quality (mmhos/cm), EC_w	1.0
	h) Water quality classification	Good
III	Soil and Crop	
	a) Soil texture	Clay loam
	b) Available water-holding capacity (in./ft), WHC	2.1
	c) Soil depth (ft)	6+
	d) Soil limitations	None
	e) Management-allowed deficiency (%), M_{ad}	30
	f) Crop	Tomato
	g) Plant spacing (ft x ft), S_p x S_r	3 x 5
	h) Plant root depth (ft), RZD	2.5
	i) Percent area shaded (%), P_s	50
	j) Average daily consumptive-use rate for the month of greatest overall water use (in./day), u_d	0.35
	k) Seasonal total crop consumptive-use rate (in.), U	25
	l) Leaching requirement (ratio), LR_t	0.04
IV	Emitter	
	a) Type	Mono-wall tubing
	b) Outlets per emitter	1
	c) Pressure head (psi), h	4.0
	d) Rated discharge @ h (gpm), q	0.0065
	e) Discharge exponent, x	0.48
	f) Coefficient of variability, v	0.12
	g) Discharge coefficient, k_d	0.00332
	h) Connection loss equivalent (ft), f_e	N/A

Figure 7-53.—Line-source-system data for Texas tomato field.

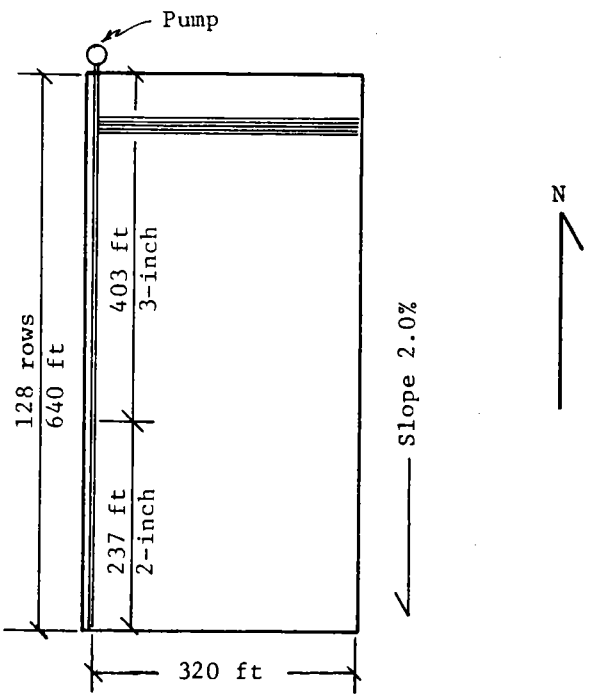

Figure 7–54.—Tomato field with line-source drip irrigation. Lateral lines are single-chamber 0.625-in. (ID) polyethylene tubing that discharge 0.4333 gpm/100 ft; the manifold is buried polyvinyl chloride pipe.

Design Factors

For a small field with a large water supply, it is really not necessary to compute all of the design factor details in figure 7–55, because the entire system can be operated simultaneously, and the irrigation only takes about 3 hr/day. Thus, irrigation could be achieved with a water supply one-sixth as large as that available, or six times as much land could be irrigated with the same water supply. If the water supply were much smaller or the area irrigated significantly larger, the design factor details would be needed. Therefore, figure 7–55 has been filled out, and a brief summary of the computations is included.

Computations for design.

i) From table 7–2 (fine-stratified) for equation 7–1,

$$P_w = \frac{2 \times 1.5 \times 5}{3 \times 5} \times 100$$
$$P_w = 100\%.$$

ii) $$F_{mn} = \frac{30}{100} \times 2.1 \times 2.5 \times \frac{100}{100} \qquad \textbf{(7–4)}$$
$$F_{mn} = 1.6 \text{ in.}$$

iii) $$T_d = 0.35[\frac{50}{100} + 0.15(1.0 - \frac{50}{100})] \qquad \textbf{(7–5)}$$
$$T_d = 0.20 \text{ in./day}$$

iv) From table 7–4,

max EC_e = 12.5 mmhos,

and

$$LR_t = \frac{1.0}{2(12.5)} = 0.04. \qquad \textbf{(7–17)}$$

v) T_r = 1.00; assumed EU = 80%

$$F_g = \frac{0.20 \times 1.00}{80/100} = 0.25 \text{ in.} \qquad \textbf{(7–8a)}$$

vi) $$F_{(gp/d)} = \frac{0.623 \times 0.25 \times 3.0 \times 5.0}{1.0} \qquad \textbf{(7–9)}$$
$$F_{(gp/d)} = 2.34 \text{ gal/day.}$$

vii) $$T_a = \frac{2.34}{2 \times 0.39} = 3.00 \text{ hr/day} \qquad \textbf{(7–30)}$$

viii) Lines a), b), c), d), e), g), and h) in the Final Design, Part II of figure 7–55, are repeats of the data already computed, because no adjustments in the application time were called for.

ix) Although there is only one orifice per plant, the water spread is more than 4 ft, so that each tomato plant will have access to water from at least three outlets. Thus, e′ = 3 in equation 7–33a, and

$$q_n = \frac{0.0065 \times 80/100}{1.0 - 0.12 \times 1.27/\sqrt{3}}$$
$$q_n = 0.0057 \text{ gpm.}$$

$$h_n = 4.0(\frac{0.0057}{0.0065})^{1/0.48} = 3.04 \text{ psi} \qquad \textbf{(7–31)}$$

$$\triangle H_s = 2.5(4.0 - 3.04) \qquad \textbf{(7–34)}$$
$$\triangle H_s = 2.4 \text{ psi or } 5.54 \text{ ft.}$$

x) $$Q_s = 726 \times \frac{4.70}{1} \times \frac{0.39}{1.5 \times 5.0} \qquad \textbf{(7–35b)}$$
$$Q_s = 177 \text{ gpm.}$$

I	Project Name--Texas Line-Source Design	Date-Spring 1978
II	Trial Design	
	a) Emission point layout	Line-source
	b) Emitter spacing (ft x ft), $S_e \times S_l$	1.5 x 5.0
	c) Emission points per plant, e	2
	d) Percent area wetted (%), P_w	100
	e) Maximum net depth of application (in.), F_{mn}	1.6
	f) Ave. peak transpiration rate (in./day), T_d	0.20
	g) Maximum allowable irrigation interval (days), I_f	8
	h) Design irrigation interval (days), I_f	1
	i) Net depth of application (in.), F_n	0.20
	j) Emission uniformity (%), EU	80
	k) Gross water application (in.), F_g	0.25
	l) Gross volume of water required per plant per day (gal/day), $F_{(gp/d)}$	1.17
	m) Time of application (hr/day), T_a	3.00
III	Final Design	
	a) Time of application (hr/day), T_a	3.00
	b) Design irrigation interval (days), I_f	1
	c) Gross water application (in.), F_g	0.25
	d) Average emitter discharge (gph), q_a	0.39
	e) Average emitter head (ft), h_a	9.24
	f) Allowable pressure-head variation (ft), ΔH_s	5.54
	g) Emitter spacing (ft x ft), $S_e \times S_l$	1.5 x 5.0
	h) Percent area wetted (%), P_w	100
	i) Number of stations, N	1
	j) Total system capacity (gpm), Q_s	177
	k) Seasonal irrigation efficiency (%), E_s	80
	l) Gross seasonal volume (acre-ft), V_i	7.0
	m) Seasonal operating time (hr), Q_t	215
	n) Total dynamic head (ft), TDH	131
	o) Actual uniformity (%), EU	86
	p) Net water-application rate (in./hr), F_n	0.0717

Figure 7-55.—Line-source-system design factors for Texas tomato field.

xi) From table 7–3 (fine, 2.5 ft),

$$T_R < 1/(1.0 - LR_t),$$

and with excellent scheduling,

$$E_s = EU = 80\% \quad \textbf{(7–11)}$$

xii) $$F_{(an)} = (25 - 1)[\frac{50}{100} + 0.075] \quad \textbf{(7–10)}$$

$$F_{(an)} = 13.8 \text{ in.}$$

$$V_i = \frac{13.8 \times 4.70}{12(1 - 0.04)(80/100)} \quad \textbf{(7–14)}$$

$$V_i = 7.0 \text{ acre-ft.}$$

$$Q_t = \frac{5{,}430 \times 7.0}{177} \quad \textbf{(7–37)}$$

$$Q_t = 215 \text{ hr/year}$$

Lateral Line Design and System Layout

Lateral-line design procedures are essentially the same for all trickle irrigation systems. The procedure includes determining the manifold spacing, the manifold layout, the lateral size (or sizes in the case of tapered laterals), and the maximum variation of pressure head along the laterals.

Single-chamber tubing was recommended for this design because it can be flushed. Clogging problems were anticipated because the irrigation water contains 3 ppm of iron, even though chlorination was used.

Because the water supply is large, it was decided that to simplify operation and maintenance only one operating station would be used. Furthermore, the farmer wanted the tomato rows to run east-west and the manifold to be buried along the west side of the field. This established the system layout (the manifold spacing and layout), as shown in figure 7–54.

Lateral-pipe size selection and head variation ($\triangle$h).—q_a = 0.39 gph, S_e = 1.5 ft, l = 319.5 ft; from table 7–6, F = 0.36; $\triangle H_s$ = 5.54 ft.

i) The lateral flow rate is:

$$q_l = \frac{319.5}{1.5} \times \frac{0.39}{60} \quad \textbf{(7–62)}$$

$$q_l = 1.38 \text{ gpm.}$$

ii) Both 0.625-in. and 0.824-in. ID single-chamber tubing are available. Trying the 0.625-in. tubing first, compute the J value by equation 7–49a (because there is not a table for 0.625-in. ID tubing in Appendix B):

$$J = 0.133 \times \frac{(1.38)^{1.75}}{(0.625)^{4.75}}$$

$$J = 2.18.$$

iii) Because the laterals are laid on the contour, $\triangle h = h_f$ and

$$\triangle h = 2.18 \times 0.36 \times \frac{319.5}{100}$$

$$\triangle h = 2.51 \text{ ft.}$$

iv) The 0.625-in. tubing should be satisfactory because

$$\triangle h < 0.5\triangle H_s = 2.77 \text{ ft,}$$

which leaves

$$(\triangle H_m)_a = 3.03 \text{ ft.}$$

Lateral inlet pressure head (h_l).—h_a = 9.24 ft, h_f = 2.51 ft, $\triangle$El = 0.

For a single lateral with a constant diameter on a level field,

$$h_l = 9.24 + 3/4(2.51) = 11.1 \text{ ft.} \quad \textbf{(7–63c)}$$

Manifold Design

Three possible manifold configurations that will stay within the small allowable $(\triangle H_m)_a$ = 3.03 ft on the relatively steep 2-percent slope are:

1. A tapered manifold carefully selected so that the friction slope closely follows the ground slope.
2. Headers and pressure (or flow) regulators used as shown in figure 7–5.
3. Flow regulators or jumper tubes of various lengths used to compensate for excessive pressure variations.

It was decided that a carefully tapered manifold would be ideal for meeting the farm's long-term requirements, provided that the desired design precision could be achieved, i.e., an EU of at least 80 percent. A tapered manifold system should be cheaper, simpler, and more durable than a system requiring flow or pressure regulators.

The graphical methods of designing manifolds are better than the economic-chart method for design-

ing downhill lines with a small $(\triangle H_m)_a$. With the graphical methods the $\triangle H_m$ can be accurately controlled; this control is difficult with the economic method. Inasmuch as the field is rectangular, the alternative graphical method was used because it is much faster than the general graphical method.

Alternative graphical method.—S_l = 5.0 ft, q_l = 1.38 gpm; $(\triangle H_m)_a$ = 3.03 ft; S = 2%. To determine the lengths of different-diameter pipes from figure 7–34: for 1.5-in., (27.4/177) × 640 = 99 ft; for 2-in., 48.7 − 27.4 = 21.3 and (21.3/177) × 640 = 77 ft. k = 0.36; weight of original solution = 385 lb.

i) Because q_l = 1.38 gpm, the standard manifold curves presented in figure 7–36 were used.

By equation 7–79a,

$$k = \left(\frac{5.0}{1.38}\right)(0.1)$$
$$k = 0.36.$$

ii) Because the manifold serves 128 rows, the flow rate is

$$q_m = 128 \times 1.38 = 177 \text{ gpm},$$

and the length of the manifold is

$$L_m = 128 \times 5.0 = 640 \text{ ft}$$

because the length to the first outlet was a full (rather than a half) row spacing.

iii) In accordance with the instructions in step 5′ in the Alternative Graphical Design Method under Manifold Design, which are discussed under Spray System, determine j′ by equation 7–87:

$$j' = \frac{3.03}{0.36} = 8.4 \text{ ft};$$

and S′ by equation 7–88:

$$S' = \frac{2 \times 177}{10} = 35.4 \text{ ft}.$$

iv) Following steps 6′, 7b′, and 8′ in the Alternative Graphical Design Method, construct figure 7–41. Step 7b′ was used because S′ > 3j′, i.e., 35.4 > 3(8.4). The solid sloping line from the origin to S′ = 35.4 ft at q_m = 177 gpm represents the ground slope drawn to the same scale as the standard manifold friction curves in figure 7–36. The sloping dashed line which is j′ = 8.4 ft above the slope line represents the upper limit of pressure variation. Any combination of lengths of pipe of different diameters that will satisfy the design requirements will have a composite friction curve defined by the two sloping lines. The procedure for drawing the least-cost composite curve is given in step 8′.

v) One design possibility, involving four pipe sizes, is:

Pipe size (in.)	Length (ft)	Weight (lb)
1½	99	27
2	77	32
2½	144	89
3	320	237
Total	640	385

This design produces a pressure head variation of

$$\triangle H_m = 0.36 \times 6.1$$
$$\triangle H_m = 2.2 \text{ ft}.$$

A simple manifold configuration would be a combination of 2- and 3-in. pipe, as indicated by the dashed curve extensions on figure 7–41. A summary of the two-pipe-size design is:

Pipe size (in.)	Length (ft)	Weight (lb)
2	237	99
3	403	299
Total	640	398

The two-pipe design would have the same pressure-head variation ($\triangle H_m$ = 2.2 ft) as the original design, but would require 13 lb more pipe. The savings in layout and installation costs afforded by eliminating two sizes of pipes would probably more than offset the extra cost for pipe.

Manifold inlet pressure (H_m).—k = 0.36; h_l = 11.1 ft.

i) The amount the manifold inlet pressure differs from h_l ($\triangle H'_m$) can be estimated graphically as demonstrated on figure 7–41 for the 2- and 3-in. pipe-size design. The thin line parallel to and above the ground-slope line is the average lateral emitter pressure line. It is positioned so that the cross-hatched areas (defined by it and the 2- and 3-in. pipe-friction curves) above and below it are about equal. The manifold inlet pressure is 4.6 graph units above it, therefore

$\triangle H'_m = 0.36 \times 4.6$
$\triangle H'_m = 1.7$ ft,

and by equation 7–76a,

$H_m = 1.11 + 1.7 = 12.8$ ft.

Main-Line Design

For the tomato field layout (fig. 7–54) there are only a few feet of main line and this should be 3-in. pipe.

Total Dynamic Head

The total dynamic head (TDH) required is the sum of the following pressure head requirements:

Item		ft[1]
(1)	Manifold inlet pressure	12.8
(2)	Main line	—
(3)	Dynamic lift from well	78.0
(4)	Filter—maximum pressure differential	23.1
(5)	Valve and fitting losses	9.2
(6)	Friction-loss safety factor	3.7
(7)	Additional pressure head to allow for emitter deterioration	4.6
Total		131.4

[1]See Drip System for comments.

System Design Summary

The final design layout is shown in figure 7–54. The design data are presented in figures 7–53 and 7–55. These three figures, along with a brief writeup of system specifications and a bill of materials, form the complete design package.

For irrigation scheduling the emission uniformity, net system application rate, and peak daily net application should be:

Final emission uniformity (EU).—$H_m = 12.8$ ft, $\triangle H_m = 2.2$ ft, $\triangle h = 2.51$ ft, $x = 0.48$; $h_a = 9.24$ ft; $v = 0.12$; use $e' = 2$ because of over-lapping spread of water.

i) compute q_n/q_a by equations 7–38 and 7–39:

$$\frac{q_n}{q_a} = \left[\frac{12.8 - 2.2 - 2.5}{9.2}\right]^{0.48}$$

$$\frac{q_n}{q_a} = 0.94.$$

ii) Compute EU by equation 7–33a:

$$EU = 100 \times [1 - \frac{1.27}{\sqrt{3}} \times 0.12] \times 0.94$$

$$EU = 86\%.$$

Net application rates (F_n and F_{mn}).—$S_p = 3$ ft, $S_r = 5$ ft, $e = 2$, $q_a = 0.39$ gph, EU = 86%.

i) By equation 7–40,

$$F_n = 1.604 \times \frac{86}{100} \times \frac{2 \times 0.39}{3 \times 5}$$

$$F_n = 0.0717 \text{ in/hr.}$$

ii) In a 24-hr period the system could apply

$$F_{mn} = 24 \times 0.0717 = 1.72 \text{ in/day.}$$

This is far higher than necessary for meeting contingencies, and the system can be expanded to cover more than six times as much land with the same water supply.

Field Evaluation

Successful trickle irrigation requires that the frequency and quantity of water application be scheduled accurately. Uniformity of field emission (EU') must be known to manage the quantity of application. Unfortunately, EU' often changes with time; therefore, the system's performance must be checked periodically.

The data needed for fully evaluating a trickle irrigation system are:

1. Duration, frequency, and operation sequence of a normal irrigation cycle.
2. Soil moisture deficit (S_{md}) and management-allowed deficit (M_{ad}) in the wetted volume.
3. Rate of discharge at the emission points and pressure near several emitters spaced throughout the system.
4. Changes in rate of discharge from emitters after cleaning or other repair.
5. Percentage of soil volume wetted.
6. Spacing and size of trees or other plants being irrigated.
7. Location of emission points relative to trees, vines, or other plants, and uniformity of emission point spacing.
8. Losses of pressure at the filters.
9. General topography.
10. Additional data indicated on figure 7–56.

Equipment Needed

The equipment needed for collecting the necessary field data includes:

1. Pressure gage (0- to 5-psi range) with "T" adapters for temporary installation at either end of the lateral hoses.
2. Stopwatch or watch with an easily visible second hand.
3. Graduated cylinder with 250-ml capacity.
4. Measuring tape 10 to 20 ft long.
5. Funnel with 3- to 6-in. diameter.
6. Shovel and soil auger or probe.
7. Manufacturer's emitter performance charts showing the relation between discharge and pressure, plus recommended operating pressures and filter requirements.
8. Sheet metal or plastic trough 3 ft long for measuring the discharge from several outlets in a perforated hose simultaneously or the discharge from a 3-ft length of porous tubing. (A piece of 1- or 2-in. PVC pipe cut in half lengthwise makes a good trough.)
9. Copies of figure 7–56 for recording data.

Field Procedure

The following field procedure is suitable for evaluating systems that have individually manufactured emitters (or sprayers) and systems that use perforated or porous lateral hose. Fill in the blanks of figure 7–56 while conducting the field procedure.

1. Fill in parts 1, 2, and 3 concerning the general soil and crop characteristics throughout the field.
2. Determine from the operator the duration and frequency of irrigation and his estimate of the management-allowed deficit (M_{ad}) to complete part 4.
3. Check and note in part 5 the pressures at the inlet and outlet of the filter, and if practical, inspect the screens for breaks and the screen fittings for passages allowing contaminants to bypass the screens.
4. Fill in parts 6, 7, and 8, which deal with the emitter and lateral hose characteristics. (When perforated or porous tubing is tested, the discharge may be rated by the manufacturer in flow per unit length.)
5. Locate four emitter laterals along an operating manifold (see figure 7–27); one should be near the inlet, two near the one-third points, and the fourth near the outer end. Sketch the system layout and note in part 9 the general topography, manifold in operation, and manifold where the discharge test will be conducted.
6. Record the system discharge rate (if the system is provided with a water meter) and the numbers of manifolds and blocks or stations. The number of blocks is the total number of manifolds divided by the number of manifolds in operation at any one time.
7. For laterals having individual emitters, measure the discharge at two adjacent emission points (denote as A and B in part 14) at each of four tree or plant locations on each of the four selected test laterals. (See figure 7–57.) Collect the flow for a few minutes to obtain a volume between 100 and 250 ml for each emission point tested. Convert each reading to milliliters per minute before entering the data in part 14. To convert milliliters per minute to gallons per hour, divide by 63.

These steps will produce eight pressure readings and 32 discharge volumes at 16 plant locations for individual emission points used in wide-spaced crops that have two or more points per plant.

For perforated hose or porous tubing, use the 3-ft trough and collect a discharge reading at each of the 16 locations described above. Because these are already averages from two or more outlets, only one reading is needed at each location.

For relatively wide-spaced crops such as grapes, where one single outlet emitter may serve one or more plants, collect a discharge reading at each of the 16 locations described above. Because the plants are served by only a single emission point, only one reading should be made at each location.

8. Measure and record in part 15 the water pressures at the inlet and downstream ends of each lateral tested in part 14 under normal operation. On the inlet end this requires disconnecting the hose before reading the pressure. On the downstream end the pressure can be read after connecting the pressure gage in the simplest way possible.

9. Check the percentage of the soil that is wetted at one of the tree locations on each test lateral and record it in part 16. It is best to select a tree at a different relative location on each lateral. Use the probe, soil auger, or shovel—whichever seems to work best—for estimating the real extent of the wetted zone about 6 to 12 in. below the surface around each tree. Determine the percent area wetted by dividing the wetted area by the total surface area between four trees.

10. If an interval of several days between irrigations is being used, check the soil moisture deficit (S_{md}) in the wetted volume near a few representative trees in the next block to be irrigated, and record it in part 17. This measurement is difficult and requires averaging samples taken from several positions around each tree.

11. Determine the minimum lateral inlet pressure (MLIP) along each operating manifold and record it in part 18. For level or uphill manifolds, the MLIP will be at the far end of the manifold. For downhill manifolds it is often about two-thirds down the manifold. For manifolds on undulating terrain it is usually on a knoll or high point. When evaluating a system that has two or more operating stations, the MLIP on each manifold should be determined. This requires cycling the system.

12. Determine the discharge correction factor (DCF) to adjust the average emission-point discharges for the tested manifold. This adjustment is needed if the tested manifold happened to be operating with a higher or lower MLIP than the system average MLIP. If the emitter discharge exponent (x) is known, use the second formula printed in part 19.

13. Determine the average and adjusted average emission-point discharges according to the equations in part 11 and 12.

Using Field Data

In trickle irrigation all the system flow is delivered to individual trees, vines, shrubs, or other plants. Essentially no water is lost except at the tree or plant locations. Therefore, if the pattern of plant distribution or spacing is uniform, uniformity of emission is of primary concern. Locations of individual emission points, or the tree locations where several emitters are closely spaced, can be thought of in much the same manner as the container positions in tests of sprinkler performance.

Average Depth of Application

The average depth applied per irrigation to the wetted area (F'_{aw}), inches, is useful for estimating M_{ad}. It can be computed by equation 7–90.

$$F'_{aw} = \frac{1.604 e q'_a T_a}{A_w} \qquad \textbf{(7–90)}$$

Where

e = number of emission points per tree.
q'_a = adjusted average emission-point discharge of the system, taken from part 12, figure 7–56, gallons per hour.
T_a = application time per irrigation, hours.
A_w = area wetted per tree or plant from part 16, figure 7–56, square feet.

The average depth applied per irrigation to the total cropped area (F'_a), inches, can be found by substituting the plant and row spacing ($S_p \times S_r$) for A_w in equation 7–90. Therefore, F'_a can be computed by equation 7–91.

$$F'_a = \frac{1.604 e q'_a T_a}{S_p \times S_r} \qquad \textbf{(7–91)}$$

1. Location _____, observer _____, date _____

2. Crop: type _____, age _____ years, spacing _____ ft

   root depth _____ ft, percentage of area covered or shaded ____ %

3. Soil: texture _____, available moisture _____ in/ft

4. Irrig: duration ____ hr, frequency ____ days, M_{ad} ____ %, _____ in

5. Filter pressure: inlet ____ psi, outlet ____ psi, loss _____ psi

6. Emitter: make _____, type _____, point spacing ____ ft

7. Rated discharge per emission point _____ gph at _____ psi

   Emission points per plant _____, giving _____ gal. per plant per day

8. Hose: diameter ____ in, material _____, length ____ ft, spacing ____ ft

9. System layout, general topography, and test locations:

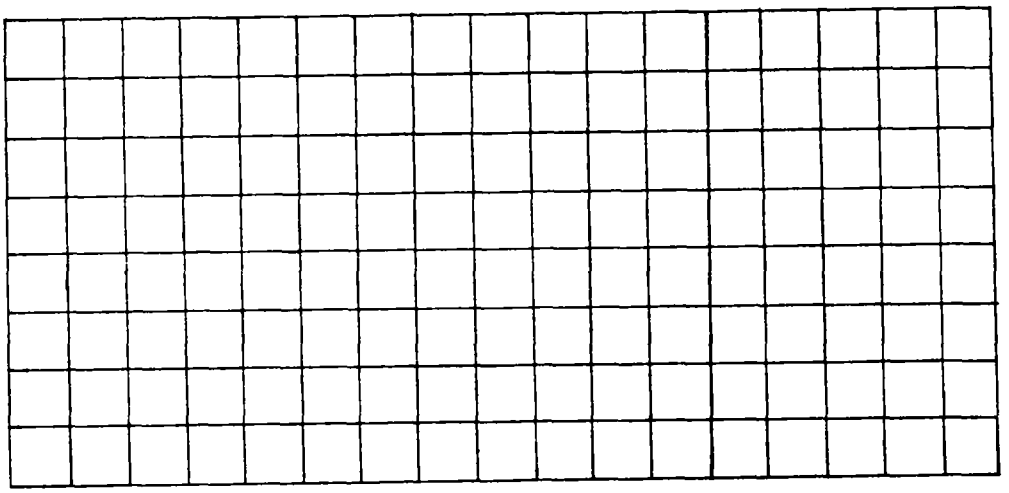

10. System discharge ____ gpm, no. of manifolds _____ and blocks _____

11. Average test manifold emission-point discharges at _____ psi

$$\text{Manifold} = \frac{(\text{sum of all averages} \qquad \text{gph})}{(\text{number of averages} \qquad)} = _____ \text{ gph}$$

$$\text{Low } 1/4 = \frac{(\text{sum of low } 1/4 \text{ averages} \qquad \text{gph})}{(\text{number of low } 1/4 \text{ averages} \qquad)} = _____ \text{ gph}$$

Figure 7-56.—Form for evaluation data.

12. Adjusted average emission-point discharges at _____ psi

System = (DCF[1/] _____) X (manifold average _____ gph) = _____ gph

Low 1/4 = (DCF _____) X (manifold low 1/4 _____ gph) = _____ gph

13. Comments: _____

14. Discharge test volume collected in _____ min (1.0 gph = 63 ml/min)

Outlet location on lateral		Lateral location on the manifold							
		inlet end		1/3 down		2/3 down		far end	
		ml	gph	ml	gph	ml	gph	ml	gph
inlet end	A								
	B								
	Ave.								
1/3 down	A								
	B								
	Ave.								
2/3 down	A								
	B								
	Ave.								
far end	A								
	B								
	Ave.								

1/See item 19.

Figure 7-56.—Form for evaluation data (continued).

15. Lateral inlet _____ psi _____ psi _____ psi _____ psi

Closed end _____ psi _____ psi _____ psi _____ psi

16. Wetted area _____ ft^2 _____ ft^2 _____ ft^2 _____ ft^2

per plant _____ % _____ % _____ % _____ %

17. Estimated average S_{md} in wetted soil volume _____ in

18. Minimum lateral inlet pressure (MLIP) on all operating manifolds:

Manifold:	Test	A	B	C	D	E	F	G	Ave.
Pressure-psi:	____	____	____	____	____	____	____	____	____

19. Discharge correction factor (DCF) for the system is:

$$DCF = \frac{2.5 \times (\text{average MLIP} _____ \text{psi})}{\text{average MLIP} _____ \text{psi} + 1.5 \times (\text{test MLIP} _____ \text{psi})} = _____$$

or if the emitter discharge exponent x = _____ is known,

$$DCF = \left[\frac{(\text{average MLIP} _____ \text{psi})}{(\text{test MLIP} _____ \text{psi})}\right]^x = _____ = _____$$

Figure 7-56.—Form for evaluation data (continued).

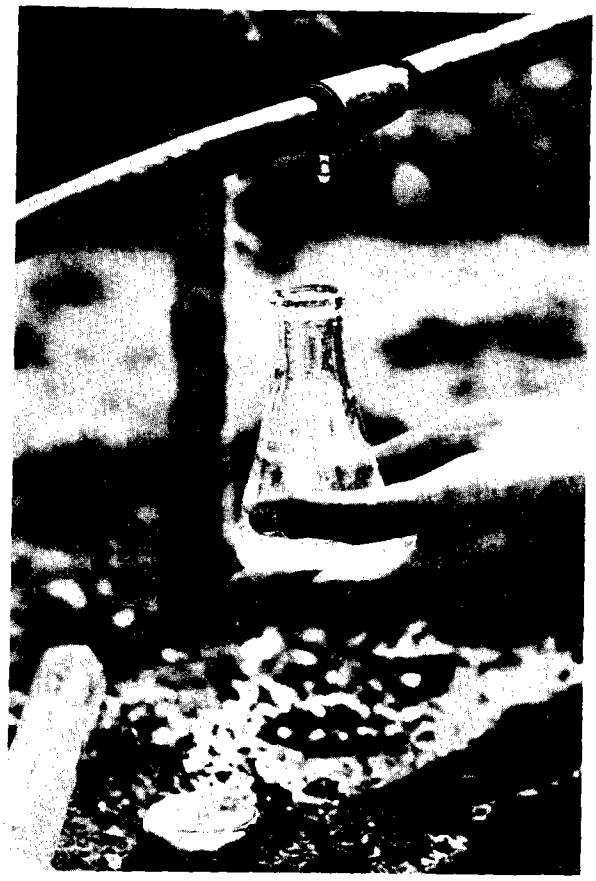

Figure 7–57.—Field measurement of discharge from an emitter.

Volume Per Day

The average volume of water applied per day for each tree or plant [$F'_{(gp/d)}$], gallons per day, can be computed by equation 7–92.

$$F'_{(gp/d)} = \frac{e q_a' T_a}{I_f} \qquad \textbf{(7–92)}$$

Where

e = number of emission points per tree.
q_a' = adjusted average emission-point discharge of the system, taken from part 12, figure 7–56, gallons per hour.
T_a = application time per irrigation, hours.
I_f = design irrigation interval, days.

Emission Uniformity

The actual field-emission uniformity (EU′) is needed to determine the system's operating efficiency and to estimate gross requirements for water application. The EU′ is a function of the emission uniformity in the tested area and of the pressure variations throughout the entire system. Where the data on emitter discharge are from an area served by a single manifold, the field emission uniformity of the manifold area tested (EU'_m), percent, can be computed by equation 7–93.

$$EU'_m = 100\, q_n'/q_a' \qquad \textbf{(7–93)}$$

Where

q_n' and q_a' = system low-quarter and overall average emitter discharges, taken from part 12, figure 7–56, gallons per hour.

Some trickle irrigation systems are fitted with pressure-compensating emitters or have pressure or flow regulation at the inlet to each lateral. However, most systems are provided with a means for pressure control or regulation only at the inlets to the manifolds. If the manifold inlet pressures vary more than a few percent because of design, management, or both, the overall EU′ will be lower than the EU'_m of the tested manifold.

An estimate of this efficiency reduction factor (ERF) can be computed from the minimum lateral inlet pressure along each manifold (MLIP), pounds per square inch, throughout the system by equations 7–94a and 7–94b.

$$ERF = \frac{\text{average MLIP} + (1.5 \text{ minimum MLIP})}{2.5(\text{average MLIP})} \qquad \textbf{(7–94a)}$$

Where

Average MLIP = average of the individual MLIP's along each manifold, pounds per square inch.
Minimum MLIP = lowest lateral inlet pressure in the system, pounds per square inch.

The ERF may be estimated more precisely by equation 7–94b.

$$ERF = \left(\frac{\text{minimum MLIP}}{\text{average MLIP}}\right)^x \qquad \textbf{(7–94b)}$$

In systems where the variations in pressure are relatively small and the emitter discharge exponent (x) ≅ 0.5, the two methods for computing ERF give essentially equal results; however, for variations in pressure greater than 0.2 times the average emitter pressure head (h_a) or x values higher than 0.6 or lower than 0.4, the differences may be significant.

The value of x can be estimated from field data as follows:

Step 1. Determine the average discharge and pressure of a group of at least six emitters along a lateral where the operating pressure is uniform.

Step 2. Reduce the operating pressure by adjusting the lateral inlet valve, and again determine the average discharge and pressure of the same group of emitters.

Step 3. Determine x by equation 7–21, using the average discharge and pressure-head values found in steps 1 and 2.

Step 4. Repeat steps 1, 2, and 3 at two other locations and average the x values for the three tests.

The ERF approximately equals the ratio between the average emission-point discharge in the area served by the manifold with the minimum MLIP and the average emission-point discharge for the system. Therefore, the system EU′ can be approximated by equation 7–95.

$$EU' = (ERF)(EU'_m) \qquad \textbf{(7–95)}$$

General criteria for EU′ values for systems that have been operated for one or more seasons are: greater than 90 percent, excellent; between 80 percent and 90 percent, good; 70 to 80 percent, fair; and less than 70 percent, poor.

Gross Application Required

Because trickle irrigation wets only a small portion of the soil volume, the soil moisture deficit (S_{md}) must be replaced frequently. It is always difficult to estimate S_{md} because some regions of the wetted part of the root zone often remain near field capacity even when the interval between irrigations is several days. For this reason, S_{md} must be estimated from weather data or from information obtained from evaporation devices. Such estimates are subject to error, and because there is no practical way to check for slight underirrigation, some margin for safety should be allowed. As a general rule, the minimum gross depth of application (F_g) should be equal to or slightly greater than the values obtained by equation 7–8a or 7–8b.

When estimating F_g by equation 7–8a or 7–8b for scheduling irrigations, let EU be the field value (EU′) and estimate the net depth of irrigation to apply (F_n) as follows:

1. Estimate the depth of water that could have been consumed by a full-canopy crop since the previous irrigation (F'_n), inches. This can be estimated by standard techniques based on weather data or pan evaporation data.
2. Subtract the depth of effective rainfall since the last irrigation (R'_e), inches.
3. Calculate F_n by equation 7–96.

$$F_n = (F'_n - R'_e)\left[\frac{P_s}{100} + 0.15\left(1.0 - \frac{P_s}{100}\right)\right] \qquad \textbf{(7–96)}$$

Where

P_s = percent shaded.

Using F_g computed by equation 7–8a or 7–8b, the average daily gross volume of water required per plant per day [$F_{(gp/d)}$] can be computed by equation 7–9.

The average volume of water actually being applied per plant each day [$F'_{(gp/d)}$] is computed by equation 7–92. If $F_{(gp/d)} < F'_{(gp/d)}$, the field is being overirrigated, and if $F_{(gp/d)} > F'_{(gp/d)}$, it is underirrigated.

Application Efficiencies

A concept called "potential application efficiency" (of the low quarter) (PE_{lq}) is useful for estimating how well a system can perform. It is a function of the peak-use transpiration ratio (T_r), the leaching requirement (LR_t), and the uniformity of field emission (EU′). When the unavoidable water losses are greater than the leaching water requirements, T_r >

$1/(1.0 - LR_t)$, PE_{lq} can be computed by equation 7–97a

$$PE_{lq} = \frac{EU'}{T_r(1.0 - LR_t)} \qquad \textbf{(7–97a)}$$

and when $T_r < 1/(1.0 - LR_t)$, PE_{lq} can be computed by equation 7–97b.

$$PE_{lq} = EU' \qquad \textbf{(7–97b)}$$

The values of T_r appear in conjunction with equation 7–8a, and those of LR_t, with equation 7–16.

A trickle irrigation system has no field boundary effects or pressure variations along the manifold tested that are not taken into account in the field estimate of EU′. Therefore, the PE_{lq} estimated with the system EU′ is an overall value for the field, except for possible minor water losses from leaks, draining of lines, and flushing (unless leaks are excessive) (see equation 7–95).

The system PE_{lq} may be low because the manifold inlet pressures are not properly set and ERF (see equations 7–94a and 7–94b) is low. In such a system the manifold inlet pressures should be adjusted to increase the uniformity of pressure and consequently ERF. When an area is overirrigated, the actual application efficiency of the low quarter (E_{lq}) is less than PE_{lq}. In such areas the E_{lq} can be estimated by equation 7–98.

$$E_{lq} = \frac{100G}{F'_{(gp/d)}} \qquad \textbf{(7–98)}$$

Where

G	=	gross water required per plant during the peak use period, gallons per day.
$F'_{(gp/d)}$	=	average volume of water applied per plant per day, gallons per day.

When an area is underirrigated and $F'_{(gp/d)}$ is less than the average daily gross volume of water required per plant per day [$F_{(gp/d)}$], then E_{lq} will approach the system EU′. In such areas the LR_t, the T_r, or both will not be satisfied. This may cause either excessive buildup of salt along the perimeters of wetted areas or a reduced volume of wetted soil.

Appendix A—Nomenclature

a = flow cross-section area (square inches)
A = field area under the system (acres)
A_f = system flow-rate adjustment factor
A_s = soil surface area directly wetted by the sprayer (square feet)
A_w = horizontal area wetted about 1 ft below soil surface (square feet)

BHP = brake horsepower

c = concentration of the desired component in liquid chemical concentrate (percent)
c = number of pipe sizes used in the manifold
C = desired dosage of chlorine or acid (parts per million)
C = friction coefficient for continuous section of pipe
C = cost of the irrigation system
c_q = coefficient that depends on the characteristics of the nozzle
c_t = required tank capacity (gallons)
C_{whp} = annual cost per water horsepower (dollars per water horsepower-season)
CRF = capital recovery factor

d = flow cross-section diameter (inches)
D = inside diameter of pipe (inches)
DCF = discharge correction factor

e = number of emission points or sprayers per plant
e' = minimum number of emitters or sprayers from which each plant can obtain water
E = present annual power cost
E' = equivalent annual cost of the rising (9 percent per year) energy cost
E_{lq} = actual application efficiency of the low quarter
E_p = pump efficiency
E_s = seasonal irrigation efficiency
EAE(r) = equivalent annualized factor of the rising energy cost at rate r
EC_{dw} = electrical conductivity of the drainage effluent (mmhos per centimeter)
EC_e = electrical conductivity of the saturated extract (mmhos per centimeter)
EC_w = electrical conductivity of the irrigation water (mmhos per centimeter)
$\triangle El$ = change in elevation; positive for laterals running uphill from the inlet and negative for downhill laterals (feet)
$\triangle El$ = difference in elevation between the pump and manifold; positive if uphill to manifold and negative if downhill (feet)
ERF = efficiency reduction factor
EU = design emission uniformity (percent)
EU' = uniformity of field emission (percent)
EU'_m = field emission uniformity of the manifold area tested (percent)

f = Darcy-Weisbach pipe-friction factor
F = reduction coefficient to compensate for the discharge along the pipe
F'_a = average depth applied per irrigation to the total cropped area (inches)
F_{an} = annual net depth of application (inches)
F'_{aw} = average depth applied per irrigation to the wetted area (inches)
F_c = concentration of nutrients in liquid fertilizer (pounds per gallon)
f_e = emitter-connection loss equivalent length (feet)
F_g = gross depth of application at each irrigation (inches)
$F_{(gal/d)}$ = gross volume of water required per day (gallons per day)
$F_{(gp/d)}$ = average volume of water applied per plant per day (gallons per day)
F_{mn} = maximum net depth of application (inches)
F_n = net application rate (inches per hour)
F_n = net depth of application (inches)
F'_n = depth of water consumed by full canopy crop since previous irrigation (inches)
F_r = rate of fertilizing (pounds per acre)
F_s = manifold pipe-friction adjustment factor
$(F_s)_1$ = friction adjustment factor for the original manifold
$(F_s)_2$ = friction adjustment factor for the manifold for which $(H_f)_2$ is being estimated
$F_{(sg)}$ = gross seasonal depth of application (inches)

g = acceleration of gravity (32.2 feet per second squared)
G = gross water required per plant during the peak use period (gallons per day)

h = working pressure head of inner main chamber (feet)
h = working pressure head at the emitter (pounds per square inch)
H = time of actual irrigating per irrigation cycle (hours)

$\triangle H$ = desired pressure-head increase between two points (feet)
$\triangle h$ = difference in pressure head along the laterals (feet)
$\triangle h'$ = amount the lateral inlet pressure differs from h_a (feet)
$(100\ \triangle h/L)'$ = maximum scalar distance between the friction curve and the ground surface line in the graphical solution
h_a = pressure head that will give the q_a (feet)
H_a = average manifold pressure
h_c = pressure head at the closed end of the lateral (feet)
$\triangle h_c$ = difference between the downstream-end and minimum pressure heads (feet)
h_e = friction head loss caused by a specific fitting (feet)
H_f = pressure-head loss in the manifold from pipe friction (feet)
h_f = lateral head loss from pipe friction (feet)
$\sum_1^m h_f$ = sum of the pipe-friction losses between the pump and manifold inlet at m (feet)
$(h_f)_a$ = original lateral pipe-friction loss (feet)
$(h_f)_b$ = new lateral pipe-friction loss (feet)
$h_{f(a,b)}$ = difference in head loss between adjacent pipes of different sizes (feet)
$(H_{fe})_m$ = pressure head to overcome pipe friction and elevation along the main line (feet)
$(h_f)_m$ = friction loss along the manifold (feet)
h_{fp} = friction loss in a lateral with length (L) (feet)
h_{fx} = head loss from a point "x" to the closed end of a multiple-outlet pipeline (feet)
$(H_f)_1$ = pressure-head loss from pipe friction for the manifold (feet)
$(H_f)_2$ = estimate being made of the pressure-head loss from pipe friction for the manifold (feet)
h_l = lateral inlet pressure that will give h_a (feet)
H_m = manifold inlet pressure head (feet)
$\triangle H_m$ = difference in pressure head along the manifold (feet)
$\triangle H_m'$ = amount the manifold inlet pressure differs from h_1 (feet)
$(\triangle H_m)_a$ = allowable manifold pressure variation (feet)
h_n = pressure head that will give the q_n required to satisfy the EU (feet)
H_r = ratio between fertilizing time and time of actual irrigating per irrigation cycle
$\triangle H_s$ = allowable subunit pressure-head variation that will give an EU reasonably close to the desired design value (feet)

h^1 = working pressure of the secondary chamber (feet)
h_1, h_2 = pressure heads corresponding to q_1, q_2, respectively (pounds per square inch)

i = annual interest rate
I_f = maximum allowable irrigation interval (days)
I_f = design irrigation interval (days)

j = dimensionless allowable head-loss ratio
J = head-loss gradient of a pipe (feet per 100 feet)
j' = $(\triangle H_m)_a$ value properly scaled for the manifold under study (feet)
J' = equivalent head-loss gradient of the lateral with emitters (feet per 100 feet)
J_l = head-loss gradient of the larger pipe (feet per 100 feet)
J_s = head-loss gradient of the smaller pipe (feet per 100 feet)
J_x = J value from Appendix B for the largest flow rate in the table for the required pipe size (feet per 100 feet)
JF' = scalar ratio for field shape
J'F = friction gradient found in step 1 of the graphical solution

k = scale factor for adjusting manifold pressure-head values taken from standard manifold curves
k_d = constant of proportionality (discharge coefficient) that characterizes each emitter
K_f = friction head-loss coefficient for a specific fitting

l = length of a lateral (feet)
L = length of a pipeline (feet)
l' = equivalent length of the lateral with emitter (feet)
l_a = original lateral pipe length (feet)
l_b = new lateral pipe length (feet)
l_c = length of the flow path in the emitter (feet)
L_d = length of pipe with diameter d (feet)
L_m = length of a single manifold (feet)
L_n = net leaching requirement for net application (inches)
L_N = annual leaching requirement for net seasonal application (inches)
L_p = length of a pair of manifolds (feet)
L_s = length of the smaller pipe that will increase the head loss by $\triangle H$ (feet)
LR_t = leaching requirement ratio

L_1 = length of pipe in the original manifold (feet)
L_2 = length of pipe in the manifold for which $(H_f)_2$ is being estimated (feet)

m = number of orifices in the secondary chamber per orifice in the main chamber
m′ = number of orifices in series in the emitter
M_{ad} = management-allowed deficit, which is the desired soil-moisture deficit at the time of irrigation (percent)
MLIP = minimum lateral inlet pressure (pounds per square inch)
average MLIP = average of the individual MLIP's along each manifold (pounds per square inch)
minimum MLIP = lowest lateral inlet pressure in the system (pounds per square inch)

n = number of emitters in the sample
n = expected life of the item (years)
N = number of operating stations
n_e = number of emitters along the lateral
$(n_p)_a$ = number of plants in the average row in the subunit
$(n_p)_c$ = number of plants in the row at the closed end of the manifold
n_r = number of row (or lateral) spacings served by the manifold
N_R = Reynolds number
$(n_r)_p$ = number of row (or lateral) spacings served from a common inlet point

P_c = pipe cost (dollars per pound)
P_s = average horizontal area shaded by the crop canopy as a percentage of the total crop area (percent)
P_u = unit of power
P_{uc} = unit cost of power (dollars per kilowatt hour)
P_w = average horizontal area wetted in the top part of the crop root zone as a percentage of the total crop area (percent)
PE_{lq} = potential application efficiency of the lower quarter
PS = perimeter of the area directly wetted by a sprayer (feet)
PW(r) = present worth factor with energy cost rising at rate r

q = emitter discharge rate (gallons per hour)
$\bar{q}$ = average discharge rate of the emitter sampled (gallons per hour)

Q = flow rate in the pipe (gallons per minute)
q_a = average of design emitter discharge rate (gallons per hour)
q_a' = average of all the field-data emitter discharges (gallons per hour)
q_c = rate of injection of the chemical into the system (gallons per hour)
q_d = upper limit flow rate for the pipe with diameter d (gallons per minute)
q_{d-1} = upper limit flow rate for the pipe with the next smaller diameter (gallons per minute)
q_f = rate of injection of liquid fertilizer into the system (gallons per hour)
q_l = lateral flow rate (gallons per minute)
$(q_l)_a$ = average lateral (pair) flow rate along the manifold (gallons per minute)
$(q_l)_c$ = flow rate into the lateral (pair) at the closed end of the manifold (gallons per minute)
q_{lp} = flow rate for pair of laterals (gallons per minute)
q_m = flow rate in the manifold (gallons per minute)
q_n = minimum emission rate computed from the minimum pressure in the system (gallons per hour)
q_n' = average discharge of the lowest quarter of the field-data discharge reading (gallons per hour)
Q_s = total system capacity or flow rate (gallons per minute)
Q_s' = adjusted flow rate for entering the economic design chart (gallons per minute)
Q_s'' = modified adjusted system flow rate (gallons per minute)
Q_t = average pump-operating time per season (hours)
q_x = largest flow rate (Q) in the respective table for pipe size in Appendix B (gallons per minute)
q_1 = flow rate in the original manifold (gallons per minute)
q_2 = flow rate in the manifold for which $(H_f)_2$ is being estimated (gallons per minute)
q_1, q_2 = discharges (gallons per hour)
$q_1, q_2 \ldots q_n$ = individual emitter discharge rates (gallons per hour)

r = annual rate of rising energy cost
R_e = effective rainfall during the growing season (inches)
R_e' = effective rainfall since the last irrigation (inches)

RZD = depth of the soil profile occupied by plant roots (feet)

S = unbiased standard deviation of the discharge rates of the sample
S = average slope of the ground line (percent)
S = slope of the manifold or lateral (feet per foot)
S′ = unusable slope component, which is the amount the friction curve needs to be raised (feet)
S′ = elevation (due to the slope, S, along the manifold) properly scaled for the manifold under study (feet)
S_e = spacing between emitters or emission points along a line (feet)
S_e' = optimum emitter spacing; drip emitter spacing that provides 80 percent of the wetted diameter estimated from field tests or table 7–2 (feet)
S_f = shape factor of the subunit
S_l = lateral spacing (feet)
S_m = manifold spacing (feet)
S_{md} = soil moisture deficit; difference between field capacity and the actual soil moisture in the root zone soil at any given time (inches)
S_p = plant spacing in the row (feet)
S_r = row spacing (feet)
S_w = width of the wetted strip (feet)
sg = specific gravity of the chemical concentrate

T_a = irrigation application time required during the peak use period (hours per day)
T_d = average daily transpiration rate for the month of greatest water use (inches per day)
T_r = peak-use period transpiration ratio
T_R = seasonal transpiration ratio
T_s = seasonal transpiration (inches)
TDH = total dynamic head (feet)
TDR = temperature-discharge ratio

U = seasonal total crop consumptive use (inches)
u_d = average daily consumptive-use rate for the month of greatest overall water use (inches per day)
u_m = total consumptive use rate for month (inches)

v = coefficient of manufacturing variation of the emitter
v = velocity of flow in the pipe (feet per second)
V_i = gross seasonal volume of irrigation water required (acre-feet)

V_s = system coefficient of manufacturing variation
$V^2/2g$ = velocity head: the energy head from the velocity of flow (feet)

W_s = residual stored moisture from off-season precipitation (inches)
WHC = water-holding capacity of the soil (inches per foot)

x = emitter discharge exponent
x = any position along the length
x = distance from the closed end (feet)
x/L = relative distance from the closed downstream end compared to the total length of a pair of laterals or manifolds

Y = theoretical reduction in yield (percent)
Y = tangent location

z = location of the inlet to the pair of laterals that gives equal minimum pressures in both the uphill and downhill members (ratio of the length of the downhill lateral to L)

ν = kinematic viscosity of water (feet squared per second)

Appendix B—Pipe Friction-Loss Tables (Smallest Standard Dimension Ratio Numbers)

Appendix Table 7–1.—Friction loss in trickle irrigation hose, nominal diameter 0.580 in.

[Inside diameter 0.580 in., discharge increment 0.05 gal/min]

Flow (Q) gal/min	Flow (Q) gal/hr	Friction loss (J) ft/100 ft	Flow (Q) gal/min	Flow (Q) gal/hr	Friction loss (J) ft/100 ft	Flow (Q) gal/min	Flow (Q) gal/hr	Friction loss (J) ft/100 ft
.05	3.00	.03	2.75	165.00	9.98	5.40	324.00	32.63
.10	6.00	.05	2.80	168.00	10.30	5.45	327.00	33.15
.15	9.00	.08	2.85	171.00	10.62	5.50	330.00	33.70
.20	12.00	.11	2.90	174.00	10.95	5.55	333.00	34.24
.25	15.00	.14	2.95	177.00	11.28	5.60	336.00	34.79
.30	18.00	.17	3.00	180.00	11.62	5.65	339.00	35.34
.35	21.00	.20	3.05	183.00	11.96	5.70	342.00	35.89
.40	24.00	.37	3.10	186.00	12.30	5.75	345.00	36.45
.45	27.00	.45	3.15	189.00	12.65	5.80	348.00	37.01
.50	30.00	.53	3.20	192.00	13.01	5.85	351.00	37.58
.55	33.00	.62	3.25	195.00	13.36	5.90	354.00	38.15
.60	36.00	.72	3.30	198.00	13.73	5.95	357.00	38.72
.65	39.00	.83	3.35	201.00	14.09	6.00	360.00	39.30
.70	42.00	.94	3.40	204.00	14.46	6.05	363.00	39.88
.75	45.00	1.06	3.45	207.00	14.84	6.10	366.00	40.46
.80	48.00	1.18	3.50	210.00	15.22	6.15	369.00	41.05
.85	51.00	1.31	3.55	213.00	15.60	6.20	372.00	41.64
.90	54.00	1.45	3.60	216.00	15.99	6.25	375.00	42.24
.95	57.00	1.59	3.65	219.00	16.38	6.30	378.00	42.84
1.00	60.00	1.73	3.70	222.00	16.77	6.35	381.00	43.44
1.05	63.00	1.88	3.75	225.00	17.17	6.40	384.00	44.05
1.10	66.00	2.04	3.80	228.00	17.58	6.45	387.00	44.66
1.15	69.00	2.20	3.85	231.00	17.98	6.50	390.00	45.27
1.20	72.00	2.37	3.90	234.00	18.40	6.55	393.00	45.89
1.25	75.00	2.54	3.95	237.00	18.81	6.60	396.00	46.51
1.30	78.00	2.72	4.00	240.00	19.23	6.65	399.00	47.13
1.35	81.00	2.90	4.05	243.00	19.66	6.70	402.00	47.76
1.40	84.00	3.09	4.10	246.00	20.09	6.75	405.00	48.40
1.45	87.00	3.28	4.15	249.00	20.52	6.80	408.00	49.03
1.50	90.00	3.48	4.20	252.00	20.96	6.85	411.00	49.67
1.55	93.00	3.68	4.25	255.00	21.40	6.90	414.00	50.32
1.60	96.00	3.89	4.30	258.00	21.84	6.95	417.00	50.96
1.65	99.00	4.10	4.35	261.00	22.29	7.00	420.00	51.61
1.70	102.00	4.32	4.40	264.00	22.74	7.05	423.00	52.27
1.75	105.00	4.54	4.45	267.00	23.20	7.10	426.00	52.93
1.80	108.00	4.77	4.50	270.00	23.66	7.15	429.00	53.59
1.85	111.00	5.00	4.55	273.00	24.12	7.20	432.00	54.25
1.90	114.00	5.24	4.60	276.00	24.59	7.25	435.00	54.92
1.95	117.00	5.48	4.65	279.00	25.07	7.30	438.00	55.60
2.00	120.00	5.73	4.70	282.00	25.54	7.35	441.00	56.27
2.05	123.00	5.98	4.75	285.00	26.02	7.40	444.00	56.95
2.10	126.00	6.24	4.80	288.00	26.52	7.45	447.00	57.64
2.15	129.00	6.50	4.85	291.00	27.00	7.50	450.00	58.32
2.20	132.00	6.76	4.90	294.00	27.49	7.55	453.00	59.01
2.25	135.00	7.03	4.95	297.00	27.98	7.60	456.00	59.71
2.30	138.00	7.31	5.00	300.00	28.49	7.65	459.00	60.41
2.35	141.00	7.58	5.05	303.00	28.99	7.70	462.00	61.11
2.40	144.00	7.87	5.10	306.00	29.50	7.75	465.00	61.81
2.45	147.00	8.16	5.15	309.00	30.01	7.80	468.00	62.52
2.50	150.00	8.45	5.20	312.00	30.52	7.85	471.00	63.23
2.55	153.00	8.75	5.25	315.00	31.04	7.90	474.00	63.95
2.60	156.00	9.05	5.30	318.00	31.57	7.95	477.00	64.67
2.65	159.00	9.35	5.35	321.00	32.09	8.00	480.00	65.39
2.70	162.00	9.66						

Appendix Table 7–2.—Friction loss in polyvinyl chloride (iron pipe size) hose, nominal diameter 1.25 in.

[Inside diameter 1.532 in., discharge increment 0.50 gal/min]

Flow (Q) gal/min	Flow (v) ft/s	Friction loss (J) ft/100 ft	Flow (Q) gal/min	Flow (v) ft/s	Friction loss (J) ft/100 ft	Flow (Q) gal/min	Flow (v) ft/s	Friction loss (J) ft/100 ft
.50	.09	.01	29.50	5.13	6.42	58.00	10.09	21.50
1.00	.17	.01	30.00	5.22	6.62	58.50	10.18	21.84
1.50	.26	.04	30.50	5.31	6.81	59.00	10.27	22.17
2.00	.35	.06	31.00	5.39	7.01	59.50	10.35	22.51
2.50	.43	.09	31.50	5.48	7.22	60.00	10.44	22.85
3.00	.52	.12	32.00	5.57	7.42	60.50	10.53	23.20
3.50	.61	.15	32.50	5.65	7.63	61.00	10.61	23.54
4.00	.70	.19	33.00	5.74	7.84	61.50	10.70	23.89
4.50	.78	.24	33.50	5.83	8.05	62.00	10.79	24.24
5.00	.87	.28	34.00	5.92	8.27	62.50	10.87	24.59
5.50	.96	.33	34.50	6.00	8.49	63.00	10.96	24.95
6.00	1.04	.39	35.00	6.09	8.71	63.50	11.05	25.30
6.50	1.13	.45	35.50	6.18	8.93	64.00	11.13	25.66
7.00	1.22	.51	36.00	6.26	9.16	64.50	11.22	26.02
7.50	1.30	.57	36.50	6.35	9.39	65.00	11.31	26.39
8.00	1.39	.64	37.00	6.44	9.62	65.50	11.40	26.75
8.50	1.48	.71	37.50	6.52	9.85	66.00	11.48	27.12
9.00	1.57	.79	38.00	6.61	10.09	66.50	11.57	27.49
9.50	1.65	.87	38.50	6.70	10.32	67.00	11.66	27.86
10.00	1.74	.95	39.00	6.79	10.57	67.50	11.74	28.24
10.50	1.83	1.03	39.50	6.87	10.81	68.00	11.83	28.62
11.00	1.91	1.12	40.00	6.96	11.05	68.50	11.92	29.00
11.50	2.00	1.21	40.50	7.05	11.30	69.00	12.00	29.33
12.00	2.09	1.31	41.00	7.13	11.55	69.50	12.09	29.76
12.50	2.17	1.40	41.50	7.22	11.81	70.00	12.18	30.15
13.00	2.26	1.50	42.00	7.31	12.06	70.50	12.27	30.54
13.50	2.35	1.61	42.50	7.39	12.32	71.00	12.35	30.93
14.00	2.44	1.71	43.00	7.48	12.58	71.50	12.44	31.32
14.50	2.52	1.82	43.50	7.57	12.84	72.00	12.53	31.71
15.00	2.61	1.93	44.00	7.66	13.11	72.50	12.61	32.11
15.50	2.70	2.05	44.50	7.74	13.38	73.00	12.70	32.51
16.00	2.78	2.17	45.00	7.83	13.65	73.50	12.79	32.91
16.50	2.87	2.29	45.50	7.92	13.92	74.00	12.87	33.32
17.00	2.96	2.41	46.00	8.00	14.19	74.50	12.96	33.72
17.50	3.04	2.54	46.50	8.09	14.47	75.00	13.05	34.13
18.00	3.13	2.67	47.00	8.18	14.75	75.50	13.14	34.54
18.50	3.22	2.80	47.50	8.26	15.03	76.00	13.22	34.95
19.00	3.31	2.94	48.00	8.35	15.32	76.50	13.31	35.37
19.50	3.39	3.08	48.50	8.44	15.60	77.00	13.40	35.79
20.00	3.48	3.22	49.00	8.53	15.89	77.50	13.48	36.20
20.50	3.57	3.36	49.50	8.61	16.19	78.00	13.57	36.63
21.00	3.65	3.51	50.00	8.70	16.48	78.50	13.66	37.05
21.50	3.74	3.66	50.50	8.79	16.78	79.00	13.74	37.48
22.00	3.83	3.81	51.00	8.87	17.07	79.50	13.83	37.90
22.50	3.91	3.97	51.50	8.96	17.38	80.00	13.92	38.33
23.00	4.00	4.12	52.00	9.05	17.68	80.50	14.01	38.77
23.50	4.09	4.28	52.50	9.13	17.99	81.00	14.09	39.20
24.00	4.18	4.45	53.00	9.22	18.29	81.50	14.18	39.64
24.50	4.26	4.61	53.50	9.31	18.60	82.00	14.27	40.08
25.00	4.35	4.73	54.00	9.40	18.92	82.50	14.35	40.52
25.50	4.44	4.95	54.50	9.48	19.23	83.00	14.44	40.96
26.00	4.52	5.13	55.00	9.57	19.55	83.50	14.53	41.41
26.50	4.61	5.31	55.50	9.66	19.87	84.00	14.61	41.86
27.00	4.70	5.48	56.00	9.74	20.19	84.50	14.70	42.31
27.50	4.78	5.67	56.50	9.83	20.52	85.00	14.79	42.76
28.00	4.87	5.85	57.00	9.92	20.84	85.50	14.88	43.21
28.50	4.96	6.04	57.50	10.00	21.17	86.00	14.96	43.67
29.00	5.05	6.23						

Appendix Table 7-3.—Friction loss in trickle irrigation hose, nominal diameter 0.700 in.

[Inside diameter 0.700 in., discharge increment 0.10 gal/min]

Flow (Q) gal/min	Flow (v) ft/s	Friction loss (J) ft/100 ft	Flow (Q) gal/min	Flow (v) ft/s	Friction loss (J) ft/100 ft	Flow (Q) gal/min	Flow (v) ft/s	Friction loss (J) ft/100 ft
.10	6.00	.03	5.50	330.00	13.76	10.80	648.00	45.38
.20	12.00	.05	5.60	336.00	14.20	10.90	654.00	46.13
.30	18.00	.08	5.70	342.00	14.65	11.00	660.00	46.89
.40	24.00	.11	5.80	348.00	15.11	11.10	666.00	47.65
.50	30.00	.22	5.90	354.00	15.57	11.20	672.00	48.41
.60	36.00	.30	6.00	360.00	16.04	11.30	678.00	49.18
.70	42.00	.39	6.10	366.00	16.51	11.40	684.00	49.96
.80	48.00	.49	6.20	372.00	17.00	11.50	690.00	50.74
.90	54.00	.60	6.30	378.00	17.43	11.60	696.00	51.53
1.00	60.00	.71	6.40	384.00	17.97	11.70	702.00	52.32
1.10	66.00	.84	6.50	390.00	18.47	11.80	708.00	53.12
1.20	72.00	.98	6.60	396.00	18.98	11.90	714.00	53.92
1.30	78.00	1.12	6.70	402.00	19.49	12.00	720.00	54.73
1.40	84.00	1.27	6.80	408.00	20.00	12.10	726.00	55.54
1.50	90.00	1.43	6.90	414.00	20.53	12.20	732.00	56.36
1.60	96.00	1.60	7.00	420.00	21.05	12.30	738.00	57.19
1.70	102.00	1.78	7.10	426.00	21.59	12.40	744.00	58.02
1.80	108.00	1.96	7.20	432.00	22.13	12.50	750.00	58.85
1.90	114.00	2.15	7.30	438.00	22.67	12.60	756.00	59.69
2.00	120.00	2.35	7.40	444.00	23.22	12.70	762.00	60.54
2.10	126.00	2.56	7.50	450.00	23.78	12.80	768.00	61.39
2.20	132.00	2.77	7.60	456.00	24.35	12.90	774.00	62.25
2.30	138.00	3.00	7.70	462.00	24.92	13.00	780.00	63.11
2.40	144.00	3.23	7.80	468.00	25.49	13.10	786.00	63.97
2.50	150.00	3.46	7.90	474.00	26.07	13.20	792.00	64.85
2.60	156.00	3.71	8.00	480.00	26.66	13.30	798.00	65.72
2.70	162.00	3.96	8.10	486.00	27.25	13.40	804.00	66.61
2.80	168.00	4.22	8.20	492.00	27.85	13.50	810.00	67.49
2.90	174.00	4.48	8.30	498.00	28.45	13.60	816.00	68.39
3.00	180.00	4.76	8.40	504.00	29.06	13.70	822.00	69.29
3.10	186.00	5.04	8.50	510.00	29.68	13.80	828.00	70.19
3.20	192.00	5.33	8.60	516.00	30.30	13.90	834.00	71.10
3.30	198.00	5.62	8.70	522.00	30.93	14.00	840.00	72.01
3.40	204.00	5.92	8.80	528.00	31.56	14.10	846.00	72.93
3.50	210.00	6.23	8.90	534.00	32.20	14.20	852.00	73.85
3.60	216.00	6.54	9.00	540.00	32.84	14.30	858.00	74.78
3.70	222.00	6.86	9.10	546.00	33.49	14.40	864.00	75.72
3.80	228.00	7.19	9.20	552.00	34.15	14.50	870.00	76.66
3.90	234.00	7.53	9.30	558.00	34.81	14.60	876.00	77.60
4.00	240.00	7.87	9.40	564.00	35.47	14.70	882.00	78.55
4.10	246.00	8.21	9.50	570.00	36.14	14.80	888.00	79.51
4.20	252.00	8.57	9.60	576.00	36.82	14.90	894.00	80.47
4.30	258.00	8.93	9.70	582.00	37.51	15.00	900.00	81.44
4.40	264.00	9.30	9.80	588.00	38.19	15.10	906.00	82.41
4.50	270.00	9.67	9.90	594.00	38.89	15.20	912.00	83.38
4.60	276.00	10.05	10.00	600.00	39.59	15.30	918.00	84.36
4.70	282.00	10.44	10.10	606.00	40.29	15.40	924.00	85.35
4.80	288.00	11.23	10.20	612.00	41.00	15.50	930.00	86.34
5.00	300.00	11.64	10.30	618.00	41.72	15.60	936.00	87.34
5.10	306.00	12.05	10.40	624.00	42.44	15.70	942.00	88.34
5.20	312.00	12.47	10.50	630.00	43.17	15.80	948.00	89.34
5.30	318.00	12.89	10.60	636.00	43.90	15.90	954.00	90.36
5.40	324.00	13.32	10.70	642.00	44.64	16.00	960.00	91.37

Appendix Table 7–4.—Friction loss in trickle irrigation hose, nominal diameter 1.5 in.

[Inside diameter 1.754 in., discharge increment 1.00 gal/min]

Flow (Q) gal/min	Flow (v) ft/s	Friction loss (J) ft/100 ft	Flow (Q) gal/min	Flow (v) ft/s	Friction loss (J) ft/100 ft
1.00	.13	.01	58.00	7.70	11.24
2.00	.27	.03	59.00	7.83	11.59
3.00	.40	.06	60.00	7.96	11.95
4.00	.53	.10	61.00	8.10	12.31
5.00	.66	.15	62.00	8.23	12.67
6.00	.80	.20	63.00	8.36	13.04
7.00	.93	.27	64.00	8.49	13.41
8.00	1.06	.34	65.00	8.63	13.79
9.00	1.19	.41	66.00	8.76	14.17
10.00	1.33	.50	67.00	8.89	14.56
11.00	1.46	.59	68.00	9.03	14.95
12.00	1.59	.69	69.00	9.16	15.35
13.00	1.73	.79	70.00	9.29	15.75
14.00	1.86	.90	71.00	9.42	16.16
15.00	1.99	1.02	72.00	9.56	16.57
16.00	2.12	1.14	73.00	9.69	16.98
17.00	2.26	1.27	74.00	9.82	17.41
18.00	2.39	1.40	75.00	9.95	17.83
19.00	2.52	1.54	76.00	10.09	18.26
20.00	2.65	1.69	77.00	10.22	18.69
21.00	2.79	1.84	78.00	10.35	19.13
22.00	2.92	2.00	79.00	10.49	19.58
23.00	3.05	2.16	80.00	10.62	20.02
24.00	3.19	2.33	81.00	10.75	20.48
25.00	3.32	2.51	82.00	10.88	20.93
26.00	3.45	2.69	83.00	11.02	21.39
27.00	3.59	2.37	84.00	11.15	21.86
28.00	3.72	3.06	85.00	11.29	22.33
29.00	3.85	3.26	86.00	11.41	22.80
30.00	3.98	3.46	87.00	11.55	23.28
31.00	4.11	3.67	88.00	11.68	23.77
32.00	4.25	3.89	89.00	11.81	24.26
33.00	4.38	4.11	90.00	11.95	24.75
34.00	4.51	4.33	91.00	12.08	25.25
35.00	4.65	4.56	92.00	12.21	25.75
36.00	4.78	4.79	93.00	12.34	26.25
37.00	4.91	5.03	94.00	12.48	26.77
38.00	5.04	5.28	95.00	12.61	27.28
39.00	5.18	5.53	96.00	12.74	27.80
40.00	5.31	5.78	97.00	12.87	28.32
41.00	5.44	6.04	98.00	13.01	28.85
42.00	5.57	6.31	99.00	13.14	29.38
43.00	5.71	6.58	100.00	13.27	29.92
44.00	5.84	6.86	101.00	13.41	30.46
45.00	5.97	7.14	102.00	13.54	31.01
46.00	6.11	7.42	103.00	13.67	31.56
47.00	6.24	7.72	104.00	13.80	32.11
48.00	6.37	8.01	105.00	13.94	32.67
49.00	6.50	8.31	106.00	14.07	33.23
50.00	6.64	8.62	107.00	14.20	33.80
51.00	6.77	8.93	108.00	14.33	34.37
52.00	6.90	9.24	109.00	14.47	34.95
53.00	7.03	9.57	110.00	14.60	35.53
54.00	7.17	9.89	111.00	14.73	36.12
55.00	7.30	10.22	112.00	14.87	36.70
56.00	7.43	10.56	113.00	15.00	37.30
57.00	7.57	10.90			

Appendix Table 7–5.—Friction loss in trickle irrigation hose, nominal diameter 2 in.

[Inside diameter 2.193 in., discharge increment 1.00 gal/min]

Flow (Q) gal/min	Flow (v) ft/s	Friction loss (J) ft/100 ft	Flow (Q) gal/min	Flow (v) ft/s	Friction loss (J) ft/100 ft	Flow (Q) gal/min	Flow (v) ft/s	Friction loss (J) ft/100 ft
1.00	.08	.00	60.00	5.09	4.10	118.00	10.02	13.79
2.00	.17	.01	61.00	5.18	4.22	119.00	10.10	14.01
3.00	.25	.02	62.00	5.26	4.34	120.00	10.19	14.22
4.00	.34	.04	63.00	5.35	4.47	121.00	10.27	14.43
5.00	.42	.05	64.00	5.43	4.60	122.00	10.36	14.65
6.00	.51	.07	65.00	5.52	4.73	123.00	10.44	14.86
7.00	.59	.09	66.00	5.60	4.86	124.00	10.53	15.03
8.00	.68	.12	67.00	5.69	4.99	125.00	10.61	15.30
9.00	.76	.14	68.00	5.77	5.13	126.00	10.70	15.52
10.00	.85	.17	69.00	5.86	5.26	127.00	10.78	15.75
11.00	.93	.20	70.00	5.94	5.40	128.00	10.87	15.97
12.00	1.02	.24	71.00	6.03	5.54	129.00	10.95	16.20
13.00	1.10	.27	72.00	6.11	5.68	130.00	11.04	16.42
14.00	1.19	.31	73.00	6.20	5.82	131.00	11.12	16.65
15.00	1.27	.35	74.00	6.28	5.96	132.00	11.21	16.83
16.00	1.36	.39	75.00	6.37	6.11	133.00	11.29	17.11
17.00	1.44	.44	76.00	6.45	6.26	134.00	11.38	17.35
18.00	1.53	.48	77.00	6.54	6.40	135.00	11.46	17.58
19.00	1.61	.53	78.00	6.62	6.55	136.00	11.55	17.82
20.00	1.70	.58	79.00	6.71	6.71	137.00	11.63	18.05
21.00	1.78	.63	80.00	6.79	6.86	138.00	11.72	18.29
22.00	1.87	.69	81.00	6.88	7.01	139.00	11.80	18.53
23.00	1.95	.74	82.00	6.96	7.17	140.00	11.89	18.77
24.00	2.04	.80	83.00	7.05	7.33	141.00	11.97	19.01
25.00	2.12	.86	84.00	7.13	7.49	142.00	12.06	19.26
26.00	2.21	.93	85.00	7.22	7.65	143.00	12.14	19.50
27.00	2.29	.99	86.00	7.30	7.81	144.00	12.23	19.75
28.00	2.38	1.05	87.00	7.39	7.97	145.00	12.31	20.00
29.00	2.46	1.12	88.00	7.47	8.14	146.00	12.40	20.25
30.00	2.55	1.19	89.00	7.56	8.31	147.00	12.48	20.50
31.00	2.63	1.26	90.00	7.64	8.47	148.00	12.57	20.75
32.00	2.72	1.34	91.00	7.73	8.64	149.00	12.65	21.01
33.00	2.80	1.41	92.00	7.81	8.82	150.00	12.74	21.26
34.00	2.89	1.49	93.00	7.90	8.99	151.00	12.82	21.52
35.00	2.97	1.57	94.00	7.98	9.16	152.00	12.91	21.78
36.00	3.06	1.65	95.00	8.07	9.34	153.00	12.99	22.04
37.00	3.14	1.73	96.00	8.15	9.52	154.00	13.08	22.30
38.00	3.23	1.81	97.00	8.24	9.69	155.00	13.16	22.56
39.00	3.31	1.90	98.00	8.32	9.88	156.00	13.25	22.82
40.00	3.40	1.99	99.00	8.41	10.06	157.00	13.33	23.09
41.00	3.48	2.08	100.00	8.49	10.24	158.00	13.42	23.35
42.00	3.57	2.17	101.00	8.58	10.43	159.00	13.50	23.62
43.00	3.65	2.26	102.00	8.66	10.61	160.00	13.59	23.89
44.00	3.74	2.36	103.00	8.75	10.80	161.00	13.67	24.16
45.00	3.82	2.45	104.00	8.83	10.99	162.00	13.76	24.43
46.00	3.91	2.55	105.00	8.92	11.18	163.00	13.84	24.70
47.00	3.99	2.65	106.00	9.00	11.37	164.00	13.92	24.98
48.00	4.08	2.75	107.00	9.09	11.57	165.00	14.01	25.26
49.00	4.16	2.85	108.00	9.17	11.76	166.00	14.09	25.53
50.00	4.25	2.96	109.00	9.25	11.96	167.00	14.18	25.81
51.00	4.33	3.06	110.00	9.34	12.16	168.00	14.26	26.09
52.00	4.42	3.17	111.00	9.42	12.36	169.00	14.35	26.37
53.00	4.50	3.28	112.00	9.51	12.56	170.00	14.43	26.65
54.00	4.59	3.39	113.00	9.59	12.76	171.00	14.52	26.94
55.00	4.67	3.51	114.00	9.68	12.96	172.00	14.60	27.22
56.00	4.75	3.62	115.00	9.76	13.17	173.00	14.69	27.51
57.00	4.84	3.74	116.00	9.85	13.39	174.00	14.77	27.80
58.00	4.92	3.86	117.00	9.93	13.58	175.00	14.86	28.09
59.00	5.01	3.98						

Appendix Table 7–6.—Friction loss in trickle irrigation hose, nominal diameter 2.5 in.

[Inside diameter 2.655 in., discharge increment 2.00 gal/min]

Flow (Q) gal/min	Flow (v) ft/s	Friction loss (J) ft/100 ft	Flow (Q) gal/min	Flow (v) ft/s	Friction loss (J) ft/100 ft	Flow (Q) gal/min	Flow (v) ft/s	Friction loss (J) ft/100 ft
2.00	.12	.00	88.00	5.10	3.26	174.00	10.08	11.09
4.00	.23	.01	90.00	5.21	3.39	176.00	10.20	11.32
6.00	.35	.03	92.00	5.33	3.52	178.00	10.31	11.56
8.00	.46	.05	94.00	5.45	3.66	180.00	10.43	11.79
10.00	.58	.07	96.00	5.56	3.80	182.00	10.54	12.03
12.00	.70	.10	98.00	5.68	3.95	184.00	10.66	12.27
14.00	.81	.13	100.00	5.79	4.09	186.00	10.77	12.51
16.00	.93	.16	102.00	5.91	4.24	188.00	10.89	12.75
18.00	1.04	.19	104.00	6.02	4.39	190.00	11.01	13.00
20.00	1.16	.23	106.00	6.14	4.55	192.00	11.12	13.25
22.00	1.27	.28	108.00	6.26	4.70	194.00	11.24	13.50
24.00	1.39	.32	110.00	6.37	4.86	196.00	11.35	13.75
26.00	1.51	.37	112.00	6.49	5.02	198.00	11.47	14.01
28.00	1.62	.42	114.00	6.60	5.18	200.00	11.59	14.26
30.00	1.74	.48	116.00	6.72	5.34	202.00	11.70	14.52
32.00	1.85	.54	118.00	6.84	5.51	204.00	11.82	14.78
34.00	1.97	.60	120.00	6.95	5.68	206.00	11.93	15.05
36.00	2.09	.66	122.00	7.07	5.85	208.00	12.05	15.31
38.00	2.20	.73	124.00	7.18	6.02	210.00	12.17	15.58
40.00	2.32	.80	126.00	7.30	6.20	212.00	12.28	15.85
42.00	2.43	.87	128.00	7.41	6.38	214.00	12.40	16.12
44.00	2.55	.94	130.00	7.53	6.56	216.00	12.51	16.39
46.00	2.66	1.02	132.00	7.65	6.74	218.00	12.63	16.67
48.00	2.78	1.10	134.00	7.76	6.93	220.00	12.74	16.94
50.00	2.90	1.19	136.00	7.88	7.11	222.00	12.86	17.22
52.00	3.01	1.27	138.00	7.99	7.30	224.00	12.98	17.51
54.00	3.13	1.36	140.00	8.11	7.50	226.00	13.09	17.79
56.00	3.24	1.45	142.00	8.23	7.69	228.00	13.21	18.08
58.00	3.36	1.54	144.00	8.34	7.88	230.00	13.32	18.36
60.00	3.48	1.64	146.00	8.46	8.08	232.00	13.44	18.65
62.00	3.59	1.74	148.00	8.57	8.28	234.00	13.56	18.95
64.00	3.71	1.84	150.00	8.69	8.49	236.00	13.67	19.24
66.00	3.82	1.95	152.00	8.81	8.69	238.00	13.79	19.54
68.00	3.94	2.05	154.00	8.92	8.90	240.00	13.90	19.83
70.00	4.06	2.16	156.00	9.04	9.11	242.00	14.02	20.13
72.00	4.17	2.27	158.00	9.15	9.32	244.00	14.13	20.44
74.00	4.29	2.39	160.00	9.27	9.53	246.00	14.25	20.74
76.00	4.40	2.50	162.00	9.38	9.75	248.00	14.37	21.05
78.00	4.52	2.62	164.00	9.50	9.97	250.00	14.48	21.35
80.00	4.63	2.74	166.00	9.62	10.19	252.00	14.60	21.67
82.00	4.75	2.87	168.00	9.73	10.41	254.00	14.71	21.98
84.00	4.87	2.99	170.00	9.85	10.64	256.00	14.83	22.29
86.00	4.98	3.12	172.00	9.96	10.86	258.00	14.95	22.61

Appendix Table 7-7.—Friction loss in trickle irrigation hose, nominal diameter 3 in.

[Inside diameter 3.284 in., discharge increment 2.00 gal/min]

Flow (Q) gal/min	Flow (v) ft/s	Friction loss (J) ft/100 ft	Flow (Q) gal/min	Flow (v) ft/s	Friction loss (J) ft/100 ft	Flow (Q) gal/min	Flow (v) ft/s	Friction loss (J) ft/100 ft
2.00	.08	.00	110.00	4.16	1.75	218.00	8.25	6.00
4.00	.15	.01	112.00	4.24	1.81	220.00	8.33	6.10
6.00	.23	.01	114.00	4.32	1.87	222.00	8.41	6.20
8.00	.30	.02	116.00	4.39	1.93	224.00	8.48	6.30
10.00	.38	.03	118.00	4.47	1.99	226.00	8.56	6.40
12.00	.45	.03	120.00	4.54	2.05	223.00	8.63	6.50
14.00	.53	.05	122.00	4.62	2.11	230.00	8.71	6.61
16.00	.61	.06	124.00	4.70	2.17	232.00	8.78	6.71
18.00	.68	.07	126.00	4.77	2.24	234.00	8.86	6.82
20.00	.76	.09	128.00	4.85	2.30	236.00	8.94	6.92
22.00	.83	.10	130.00	4.92	2.37	238.00	9.01	7.03
24.00	.91	.12	132.00	5.00	2.43	240.00	9.09	7.14
26.00	.98	.14	134.00	5.07	2.50	242.00	9.16	7.24
28.00	1.06	.15	136.00	5.15	2.56	244.00	9.24	7.35
30.00	1.14	.17	138.00	5.23	2.63	246.00	9.31	7.46
32.00	1.21	.19	140.00	5.30	2.70	248.00	9.39	7.57
34.00	1.29	.22	142.00	5.38	2.77	250.00	9.47	7.68
36.00	1.36	.24	144.00	5.45	2.84	252.00	9.54	7.79
38.00	1.44	.26	146.00	5.53	2.91	254.00	9.62	7.91
40.00	1.51	.29	148.00	5.60	2.99	256.00	9.69	8.02
42.00	1.59	.32	150.00	5.68	3.06	258.00	9.77	8.13
44.00	1.67	.34	152.00	5.76	3.13	260.00	9.84	8.25
46.00	1.74	.37	154.00	5.83	3.21	262.00	9.92	8.36
48.00	1.82	.40	156.00	5.91	3.28	264.00	10.00	8.48
50.00	1.89	.43	158.00	5.98	3.36	266.00	10.07	8.59
52.00	1.97	.46	160.00	6.06	3.44	268.00	10.15	8.71
54.00	2.04	.49	162.00	6.13	3.51	270.00	10.22	8.83
56.00	2.12	.53	164.00	6.21	3.59	272.00	10.30	8.95
58.00	2.20	.56	166.00	6.29	3.67	274.00	10.37	9.07
60.00	2.27	.59	168.00	6.36	3.75	276.00	10.45	9.19
62.00	2.35	.63	170.00	6.44	3.83	278.00	10.53	9.31
64.00	2.42	.67	172.00	6.51	3.91	280.00	10.60	9.43
66.00	2.50	.70	174.00	6.59	4.00	282.00	10.68	9.55
68.00	2.57	.74	176.00	6.66	4.08	284.00	10.75	9.67
70.00	2.65	.78	178.00	6.74	4.16	286.00	10.83	9.80
72.00	2.73	.82	180.00	6.82	4.25	288.00	10.90	9.92
74.00	2.80	.86	182.00	6.89	4.33	290.00	10.98	10.05
76.00	2.88	.90	184.00	6.97	4.42	292.00	11.06	10.17
78.00	2.95	.95	186.00	7.04	4.51	294.00	11.13	10.30
80.00	3.03	.99	188.00	7.12	4.59	296.00	11.21	10.43
82.00	3.10	1.04	190.00	7.19	4.68	298.00	11.28	10.55
84.00	3.18	1.08	192.00	7.27	4.77	300.00	11.36	10.68
86.00	3.26	1.13	194.00	7.35	4.86	302.00	11.43	10.81
88.00	3.33	1.18	196.00	7.42	4.95	304.00	11.51	10.94
90.00	3.41	1.22	198.00	7.50	5.04	306.00	11.59	11.07
92.00	3.48	1.27	200.00	7.57	5.13	308.00	11.66	11.20
94.00	3.56	1.32	202.00	7.65	5.23	310.00	11.74	11.34
96.00	3.63	1.37	204.00	7.72	5.32	312.00	11.81	11.47
98.00	3.71	1.43	206.00	7.80	5.42	314.00	11.89	11.60
100.00	3.79	1.48	208.00	7.88	5.51	316.00	11.96	11.74
102.00	3.86	1.53	210.00	7.95	5.61	318.00	12.04	11.87
104.00	3.94	1.59	212.00	8.03	5.70	320.00	12.12	12.01
106.00	4.01	1.64	214.00	8.10	5.80	322.00	12.19	12.14
108.00	4.09	1.70	216.00	8.18	5.90	324.00	12.27	12.28

Appendix Table 7–8.—Friction loss in trickle irrigation hose, nominal diameter 4 in.

[Inside diameter 4.280 in., discharge increment 5.00 gal/min]

Flow (Q) gal/min	Flow (v) ft/s	Friction loss (J) ft/100 ft	Flow (Q) gal/min	Flow (v) ft/s	Friction loss (J) ft/100 ft	Flow (Q) gal/min	Flow (v) ft/s	Friction loss (J) ft/100 ft
5.00	.11	.00	230.00	5.13	1.95	455.00	10.14	6.35
10.00	.22	.01	235.00	5.24	1.92	460.00	10.25	6.48
15.00	.33	.01	240.00	5.35	2.00	465.00	10.37	6.61
20.00	.45	.02	245.00	5.46	2.07	470.00	10.48	6.74
25.00	.56	.04	250.00	5.57	2.15	475.00	10.59	6.87
30.00	.67	.05	255.00	5.68	2.23	480.00	10.70	7.00
35.00	.78	.06	260.00	5.80	2.31	485.00	10.81	7.13
40.00	.89	.08	265.00	5.91	2.39	490.00	10.92	7.26
45.00	1.00	.10	270.00	6.02	2.47	495.00	11.03	7.40
50.00	1.11	.12	275.00	6.13	2.55	500.00	11.15	7.53
55.00	1.23	.14	280.00	6.24	2.64	505.00	11.26	7.67
60.00	1.34	.17	285.00	6.35	2.72	510.00	11.37	7.81
65.00	1.45	.19	290.00	6.46	2.81	515.00	11.48	7.95
70.00	1.56	.22	295.00	6.58	2.90	520.00	11.59	8.09
75.00	1.67	.25	300.00	6.69	2.99	525.00	11.70	8.23
80.00	1.78	.28	305.00	6.80	3.08	530.00	11.81	8.38
85.00	1.89	.31	310.00	6.91	3.17	535.00	11.93	8.52
90.00	2.01	.34	315.00	7.02	3.26	540.00	12.04	8.66
95.00	2.12	.38	320.00	7.13	3.36	545.00	12.15	8.81
100.00	2.23	.42	325.00	7.24	3.45	550.00	12.26	8.96
105.00	2.34	.45	330.00	7.36	3.55	555.00	12.37	9.11
110.00	2.45	.49	335.00	7.47	3.65	560.00	12.48	9.26
115.00	2.56	.53	340.00	7.58	3.75	565.00	12.59	9.41
120.00	2.67	.58	345.00	7.69	3.85	570.00	12.71	9.56
125.00	2.79	.62	350.00	7.80	3.95	575.00	12.82	9.71
130.00	2.90	.66	355.00	7.91	4.05	580.00	12.93	9.86
135.00	3.01	.71	360.00	8.02	4.16	585.00	13.04	10.02
140.00	3.12	.76	365.00	8.14	4.26	590.00	13.15	10.18
145.00	3.23	.81	370.00	8.25	4.37	595.00	13.26	10.33
150.00	3.34	.86	375.00	8.36	4.47	600.00	13.37	10.49
155.00	3.46	.91	380.00	8.47	4.58	605.00	13.49	10.65
160.00	3.57	.96	385.00	8.58	4.69	610.00	13.60	10.81
165.00	3.68	1.02	390.00	8.69	4.80	615.00	13.71	10.97
170.00	3.79	1.07	395.00	8.81	4.92	620.00	13.82	11.14
175.00	3.90	1.13	400.00	8.92	5.03	625.00	13.93	11.30
180.00	4.01	1.19	405.00	9.03	5.14	630.00	14.04	11.46
185.00	4.12	1.25	410.00	9.14	5.26	635.00	14.16	11.63
190.00	4.24	1.31	415.00	9.25	5.38	640.00	14.27	11.80
195.00	4.35	1.38	420.00	9.36	5.49	645.00	14.38	11.96
200.00	4.46	1.44	425.00	9.47	5.61	650.00	14.49	12.13
205.00	4.57	1.50	430.00	9.59	5.73	655.00	14.60	12.30
210.00	4.68	1.57	435.00	9.70	5.85	660.00	14.71	12.48
215.00	4.79	1.64	440.00	9.81	5.98	665.00	14.82	12.65
220.00	4.90	1.71	445.00	9.92	6.10	670.00	14.94	12.82
225.00	5.02	1.78	450.00	10.03	6.22			

Appendix Table 7–9.—Friction loss in trickle irrigation hose, nominal diameter 6 in.

[Inside diameter 6.301 in., discharge increment 5.00 gal/min]

Flow (Q) gal/min	Flow (v) ft/s	Friction loss (J) ft/100 ft	Flow (Q) gal/min	Flow (v) ft/s	Friction loss (J) ft/100 ft	Flow (Q) gal/min	Flow (v) ft/s	Friction loss (J) ft/100 ft
5.00	.05	.00	275.00	2.83	.40	545.00	5.61	1.37
10.00	.10	.00	280.00	2.88	.41	550.00	5.66	1.39
15.00	.15	.00	285.00	2.93	.43	555.00	5.71	1.42
20.00	.21	.00	290.00	2.98	.44	560.00	5.76	1.44
25.00	.26	.01	295.00	3.03	.45	565.00	5.81	1.46
30.00	.31	.01	300.00	3.09	.47	570.00	5.86	1.49
35.00	.36	.01	305.00	3.14	.48	575.00	5.91	1.51
40.00	.41	.01	310.00	3.19	.49	580.00	5.97	1.53
45.00	.46	.02	315.00	3.24	.51	585.00	6.02	1.56
50.00	.51	.02	320.00	3.29	.52	590.00	6.07	1.58
55.00	.57	.02	325.00	3.34	.54	595.00	6.12	1.61
60.00	.62	.03	330.00	3.39	.55	600.00	6.17	1.63
65.00	.67	.03	335.00	3.45	.57	605.00	6.22	1.65
70.00	.72	.03	340.00	3.50	.58	610.00	6.27	1.68
75.00	.77	.04	345.00	3.55	.60	615.00	6.33	1.70
80.00	.82	.04	350.00	3.60	.62	620.00	6.38	1.73
85.00	.87	.05	355.00	3.65	.63	625.00	6.43	1.76
90.00	.93	.05	360.00	3.70	.65	630.00	6.48	1.78
95.00	.98	.06	365.00	3.75	.66	635.00	6.53	1.81
100.00	1.03	.07	370.00	3.81	.68	640.00	6.58	1.83
105.00	1.08	.07	375.00	3.86	.70	645.00	6.63	1.86
110.00	1.13	.08	380.00	3.91	.71	650.00	6.69	1.88
115.00	1.18	.08	385.00	3.96	.73	655.00	6.74	1.91
120.00	1.23	.09	390.00	4.01	.75	660.00	6.79	1.94
125.00	1.28	.10	395.00	4.06	.77	665.00	6.84	1.96
130.00	1.34	.10	400.00	4.11	.78	670.00	6.89	1.99
135.00	1.39	.11	405.00	4.17	.80	675.00	6.94	2.02
140.00	1.44	.12	410.00	4.22	.82	680.00	6.99	2.05
145.00	1.49	.13	415.00	4.27	.84	685.00	7.05	2.07
150.00	1.54	.13	420.00	4.32	.86	690.00	7.10	2.10
155.00	1.59	.14	425.00	4.37	.87	695.00	7.15	2.13
160.00	1.65	.15	430.00	4.42	.89	700.00	7.20	2.16
165.00	1.70	.16	435.00	4.47	.91	705.00	7.25	2.18
170.00	1.75	.17	440.00	4.53	.93	710.00	7.30	2.21
175.00	1.80	.18	445.00	4.58	.95	715.00	7.35	2.24
180.00	1.85	.19	450.00	4.63	.97	720.00	7.41	2.27
185.00	1.90	.20	455.00	4.68	.99	725.00	7.46	2.30
190.00	1.95	.21	460.00	4.73	1.01	730.00	7.51	2.33
195.00	2.01	.22	465.00	4.78	1.03	735.00	7.56	2.36
200.00	2.06	.23	470.00	4.83	1.05	740.00	7.61	2.38
205.00	2.11	.24	475.00	4.88	1.07	745.00	7.66	2.41
210.00	2.16	.25	480.00	4.94	1.09	750.00	7.71	2.44
215.00	2.21	.26	485.00	4.99	1.11	755.00	7.77	2.47
220.00	2.26	.27	490.00	5.04	1.13	760.00	7.82	2.50
225.00	2.31	.28	495.00	5.09	1.15	765.00	7.87	2.53
230.00	2.37	.29	500.00	5.14	1.17	770.00	7.92	2.56
235.00	2.42	.30	505.00	5.19	1.19	775.00	7.97	2.59
240.00	2.47	.31	510.00	5.25	1.21	780.00	8.02	2.62
245.00	2.52	.32	515.00	5.30	1.24	785.00	8.07	2.65
250.00	2.57	.34	520.00	5.35	1.26	790.00	8.13	2.68
255.00	2.62	.35	525.00	5.40	1.28	795.00	8.18	2.72
260.00	2.67	.36	530.00	5.45	1.30	800.00	8.23	2.75
265.00	2.73	.37	535.00	5.50	1.32	805.00	8.28	2.78
270.00	2.78	.39	540.00	5.55	1.35	810.00	8.33	2.81

Appendix Table 7-10.—Friction loss in trickle irrigation hose, nominal diameter 8 in.

[Inside diameter 8.205 in., discharge increment 10.00 gal/min]

Flow (Q) gal/min	Flow (v) ft/s	Friction loss (J) ft/100 ft	Flow (Q) gal/min	Flow (v) ft/s	Friction loss (J) ft/100 ft	Flow (Q) gal/min	Flow (v) ft/s	Friction loss (J) ft/100 ft
10.00	.06	.00	550.00	3.34	.39	1090.00	6.61	1.35
20.00	.12	.00	560.00	3.40	.40	1100.00	6.67	1.37
30.00	.18	.00	570.00	3.46	.42	1110.00	6.73	1.40
40.00	.24	.00	580.00	3.52	.43	1120.00	6.79	1.42
50.00	.30	.01	590.00	3.58	.44	1130.00	6.85	1.44
60.00	.36	.01	600.00	3.64	.46	1140.00	6.91	1.47
70.00	.42	.01	610.00	3.70	.47	1150.00	6.98	1.49
80.00	.49	.01	620.00	3.76	.49	1160.00	7.04	1.51
90.00	.55	.02	630.00	3.82	.50	1170.00	7.10	1.53
100.00	.61	.02	640.00	3.88	.51	1180.00	7.16	1.56
110.00	.67	.02	650.00	3.94	.53	1190.00	7.22	1.58
120.00	.73	.03	660.00	4.00	.54	1200.00	7.28	1.60
130.00	.79	.03	670.00	4.06	.56	1210.00	7.33	1.64
140.00	.85	.03	680.00	4.12	.57	1220.00	7.39	1.66
150.00	.91	.04	690.00	4.19	.59	1230.00	7.45	1.68
160.00	.97	.04	700.00	4.25	.61	1240.00	7.51	1.71
170.00	1.03	.05	710.00	4.31	.62	1250.00	7.58	1.73
180.00	1.09	.05	720.00	4.37	.64	1260.00	7.64	1.76
190.00	1.15	.06	730.00	4.43	.65	1270.00	7.70	1.78
200.00	1.21	.06	740.00	4.49	.67	1280.00	7.76	1.81
210.00	1.27	.07	750.00	4.55	.69	1290.00	7.82	1.83
220.00	1.33	.08	760.00	4.61	.70	1300.00	7.89	1.86
230.00	1.40	.08	770.00	4.67	.72	1310.00	7.95	1.89
240.00	1.46	.09	780.00	4.73	.74	1320.00	8.01	1.91
250.00	1.52	.09	790.00	4.79	.75	1330.00	8.07	1.94
260.00	1.58	.10	800.00	4.85	.77	1340.00	8.13	1.97
270.00	1.64	.11	810.00	4.91	.79	1350.00	8.19	1.99
280.00	1.70	.12	820.00	4.97	.81	1360.00	8.25	2.02
290.00	1.76	.12	830.00	5.03	.82	1370.00	8.31	2.05
300.00	1.82	.13	840.00	5.10	.84	1380.00	8.37	2.07
310.00	1.88	.14	850.00	5.16	.86	1390.00	8.43	2.10
320.00	1.94	.15	860.00	5.22	.88	1400.00	8.49	2.13
330.00	2.00	.16	870.00	5.28	.90	1410.00	8.55	2.16
340.00	2.06	.16	880.00	5.34	.92	1420.00	8.61	2.18
350.00	2.12	.17	890.00	5.40	.93	1430.00	8.67	2.21
360.00	2.18	.18	900.00	5.46	.95	1440.00	8.73	2.24
370.00	2.24	.19	910.00	5.52	.97	1450.00	8.80	2.27
380.00	2.30	.20	920.00	5.58	.99	1460.00	8.86	2.30
390.00	2.37	.21	930.00	5.64	1.01	1470.00	8.92	2.33
400.00	2.43	.22	940.00	5.70	1.03	1480.00	8.98	2.36
410.00	2.49	.23	950.00	5.76	1.05	1490.00	9.04	2.38
420.00	2.55	.24	960.00	5.82	1.07	1500.00	9.10	2.41
430.00	2.61	.25	970.00	5.88	1.09	1510.00	9.16	2.44
440.00	2.67	.26	980.00	5.94	1.11	1520.00	9.22	2.47
450.00	2.73	.27	990.00	6.00	1.13	1530.00	9.28	2.50
460.00	2.79	.28	1000.00	6.07	1.15	1540.00	9.34	2.53
470.00	2.85	.29	1010.00	6.13	1.18	1550.00	9.40	2.56
480.00	2.91	.31	1020.00	6.19	1.20	1560.00	9.46	2.59
490.00	2.97	.32	1030.00	6.25	1.22	1570.00	9.52	2.62
500.00	3.03	.33	1040.00	6.31	1.24	1580.00	9.58	2.65
510.00	3.09	.34	1050.00	6.37	1.26	1590.00	9.64	2.68
520.00	3.15	.35	1060.00	6.43	1.28	1600.00	9.70	2.71
530.00	3.21	.37	1070.00	6.49	1.31	1610.00	9.77	2.75
540.00	3.28	.38	1080.00	6.55	1.33	1620.00	9.83	2.78

Appendix Table 7-11.—Friction loss in trickle irrigation hose, nominal diameter 10 in.

[Inside diameter 10.226 in., discharge increment 10.00 gal/min]

Flow (Q) gal/min	Flow (v) ft/s	Friction loss (J) ft/100 ft	Flow (Q) gal/min	Flow (v) ft/s	Friction loss (J) ft/100 ft	Flow (Q) gal/min	Flow (v) ft/s	Friction loss (J) ft/100 ft	Flow (Q) gal/min	Flow (v) ft/s	Friction loss (J) ft/100 ft
10.00	.04	.00	600.00	2.34	.16	1190.00	4.65	.55	1780.00	6.95	1.14
20.00	.08	.00	610.00	2.38	.16	1200.00	4.69	.56	1790.00	6.99	1.15
30.00	.12	.00	620.00	2.42	.17	1210.00	4.72	.57	1800.00	7.03	1.16
40.00	.16	.00	630.00	2.46	.17	1220.00	4.76	.57	1810.00	7.07	1.18
50.00	.20	.00	640.00	2.50	.18	1230.00	4.80	.58	1820.00	7.11	1.19
60.00	.23	.00	650.00	2.54	.18	1240.00	4.84	.59	1830.00	7.15	1.20
70.00	.27	.00	660.00	2.58	.19	1250.00	4.88	.60	1840.00	7.19	1.21
80.00	.31	.00	670.00	2.62	.19	1260.00	4.92	.61	1850.00	7.22	1.22
90.00	.35	.01	680.00	2.66	.20	1270.00	4.96	.62	1860.00	7.26	1.24
100.00	.39	.01	690.00	2.69	.20	1280.00	5.00	.63	1870.00	7.30	1.25
110.00	.43	.01	700.00	2.73	.21	1290.00	5.04	.64	1880.00	7.34	1.26
120.00	.47	.01	710.00	2.77	.22	1300.00	5.08	.64	1890.00	7.38	1.27
130.00	.51	.01	720.00	2.81	.22	1310.00	5.12	.65	1900.00	7.42	1.28
140.00	.55	.01	730.00	2.85	.23	1320.00	5.15	.66	1910.00	7.46	1.30
150.00	.59	.01	740.00	2.89	.23	1330.00	5.19	.67	1920.00	7.50	1.31
160.00	.62	.01	750.00	2.93	.24	1340.00	5.23	.68	1930.00	7.54	1.32
170.00	.66	.02	760.00	2.97	.24	1350.00	5.27	.69	1940.00	7.58	1.33
180.00	.70	.02	770.00	3.01	.25	1360.00	5.31	.70	1950.00	7.61	1.35
190.00	.74	.02	780.00	3.05	.26	1370.00	5.35	.71	1960.00	7.65	1.36
200.00	.78	.02	790.00	3.09	.26	1380.00	5.39	.72	1970.00	7.69	1.37
210.00	.82	.02	800.00	3.12	.27	1390.00	5.43	.73	1980.00	7.73	1.38
220.00	.86	.03	810.00	3.16	.27	1400.00	5.47	.74	1990.00	7.77	1.40
230.00	.90	.03	820.00	3.20	.28	1410.00	5.51	.75	2000.00	7.81	1.41
240.00	.94	.03	830.00	3.24	.29	1420.00	5.55	.76	2010.00	7.85	1.42
250.00	.98	.03	840.00	3.28	.29	1430.00	5.59	.77	2020.00	7.89	1.44
260.00	1.02	.04	850.00	3.32	.30	1440.00	5.62	.78	2030.00	7.93	1.45
270.00	1.05	.04	860.00	3.36	.30	1450.00	5.66	.79	2040.00	7.97	1.46
280.00	1.09	.04	870.00	3.40	.31	1460.00	5.70	.80	2050.00	8.01	1.47
290.00	1.13	.04	880.00	3.44	.32	1470.00	5.74	.81	2060.00	8.04	1.49
300.00	1.17	.05	890.00	3.48	.32	1480.00	5.78	.82	2070.00	8.08	1.50
310.00	1.21	.05	900.00	3.51	.33	1490.00	5.82	.83	2080.00	8.12	1.51
320.00	1.25	.05	910.00	3.55	.34	1500.00	5.86	.84	2090.00	8.16	1.53
330.00	1.29	.05	920.00	3.59	.34	1510.00	5.90	.85	2100.00	8.20	1.54
340.00	1.33	.06	930.00	3.63	.35	1520.00	5.94	.86	2110.00	8.24	1.55
350.00	1.37	.06	940.00	3.67	.36	1530.00	5.97	.87	2120.00	8.28	1.57
360.00	1.41	.06	950.00	3.71	.36	1540.00	6.01	.88	2130.00	8.32	1.58
370.00	1.44	.07	960.00	3.75	.37	1550.00	6.05	.89	2140.00	8.36	1.59
380.00	1.48	.07	970.00	3.79	.38	1560.00	6.09	.90	2150.00	8.40	1.61
390.00	1.52	.07	980.00	3.83	.39	1570.00	6.13	.91	2160.00	8.43	1.62
400.00	1.56	.08	990.00	3.87	.39	1580.00	6.17	.92	2170.00	8.47	1.64
410.00	1.60	.08	1000.00	3.90	.40	1590.00	6.21	.93	2180.00	8.51	1.65
420.00	1.64	.08	1010.00	3.94	.41	1600.00	6.25	.94	2190.00	8.55	1.66
430.00	1.68	.09	1020.00	3.98	.41	1610.00	6.29	.95	2200.00	8.59	1.68
440.00	1.72	.09	1030.00	4.02	.42	1620.00	6.33	.96	2210.00	8.63	1.69
450.00	1.76	.09	1040.00	4.06	.43	1630.00	6.37	.97	2220.00	8.67	1.71
460.00	1.80	.10	1050.00	4.10	.44	1640.00	6.40	.98	2230.00	8.71	1.72
470.00	1.84	.10	1060.00	4.14	.44	1650.00	6.44	.99	2240.00	8.75	1.73
480.00	1.87	.11	1070.00	4.18	.45	1660.00	6.48	1.00	2250.00	8.79	1.75
490.00	1.91	.11	1080.00	4.22	.46	1670.00	6.52	1.02	2260.00	8.83	1.76
500.00	1.95	.11	1090.00	4.26	.47	1680.00	6.56	1.03	2270.00	8.86	1.78
510.00	1.99	.12	1100.00	4.30	.48	1690.00	6.60	1.04	2280.00	8.90	1.79
520.00	2.03	.12	1110.00	4.33	.48	1700.00	6.64	1.05	2290.00	8.94	1.80
530.00	2.07	.13	1120.00	4.37	.49	1710.00	6.68	1.06	2300.00	8.98	1.82
540.00	2.11	.13	1130.00	4.41	.50	1720.00	6.72	1.07	2310.00	9.02	1.83
550.00	2.15	.14	1140.00	4.45	.51	1730.00	6.76	1.08	2320.00	9.06	1.85
560.00	2.19	.14	1150.00	4.49	.52	1740.00	6.79	1.09	2330.00	9.10	1.86
570.00	2.23	.14	1160.00	4.53	.52	1750.00	6.83	1.11	2340.00	9.14	1.88
580.00	2.26	.15	1170.00	4.57	.53	1760.00	6.87	1.12	2350.00	9.18	1.89
590.00	2.30	.15	1180.00	4.61	.54	1770.00	6.91	1.13			

Appendix Table 7–12.—Friction loss in trickle irrigation hose, nominal diameter 12 in.

[Inside diameter 12.128 in., discharge increment 20.00 gal/min]

Flow (Q) gal/min	Flow (v) ft/s	Friction loss (J) ft/100 ft	Flow (Q) gal/min	Flow (v) ft/s	Friction loss (J) ft/100 ft	Flow (Q) gal/min	Flow (v) ft/s	Friction loss (J) ft/100 ft
20.00	.06	.00	1160.00	3.22	.23	2300.00	6.39	.90
40.00	.11	.00	1180.00	3.28	.24	2320.00	6.44	.91
60.00	.17	.00	1200.00	3.33	.25	2340.00	6.50	.92
80.00	.22	.00	1220.00	3.39	.25	2360.00	6.55	.94
100.00	.28	.00	1240.00	3.44	.26	2380.00	6.61	.95
120.00	.33	.00	1260.00	3.50	.27	2400.00	6.66	.96
140.00	.39	.01	1280.00	3.55	.28	2420.00	6.72	.98
160.00	.44	.01	1300.00	3.61	.28	2440.00	6.77	.99
180.00	.50	.01	1320.00	3.66	.29	2460.00	6.83	.90
200.00	.56	.01	1340.00	3.72	.30	2480.00	6.88	.92
220.00	.61	.01	1360.00	3.78	.31	2500.00	6.94	.93
240.00	.67	.01	1380.00	3.83	.32	2520.00	7.00	.94
260.00	.72	.02	1400.00	3.89	.32	2540.00	7.05	.96
280.00	.78	.02	1420.00	3.94	.33	2560.00	7.11	.97
300.00	.83	.02	1440.00	4.00	.34	2580.00	7.16	.98
320.00	.89	.02	1460.00	4.05	.35	2600.00	7.22	1.00
340.00	.94	.03	1480.00	4.11	.36	2620.00	7.27	1.01
360.00	1.00	.03	1500.00	4.16	.37	2640.00	7.33	1.03
380.00	1.05	.03	1520.00	4.22	.38	2660.00	7.38	1.04
400.00	1.11	.03	1540.00	4.28	.39	2680.00	7.44	1.06
420.00	1.17	.04	1560.00	4.33	.39	2700.00	7.50	1.07
440.00	1.22	.04	1580.00	4.39	.40	2720.00	7.55	1.08
460.00	1.28	.04	1600.00	4.44	.41	2740.00	7.61	1.10
480.00	1.33	.05	1620.00	4.50	.42	2760.00	7.66	1.11
500.00	1.39	.05	1640.00	4.55	.43	2780.00	7.72	1.13
520.00	1.44	.05	1660.00	4.61	.44	2800.00	7.77	1.14
540.00	1.50	.06	1680.00	4.66	.45	2820.00	7.83	1.16
560.00	1.55	.06	1700.00	4.72	.46	2840.00	7.88	1.17
580.00	1.61	.07	1720.00	4.78	.47	2860.00	7.94	1.19
600.00	1.67	.07	1740.00	4.83	.48	2880.00	8.00	1.20
620.00	1.72	.07	1760.00	4.89	.49	2900.00	8.05	1.22
640.00	1.78	.08	1780.00	4.94	.50	2920.00	8.11	1.23
660.00	1.83	.08	1800.00	5.00	.51	2940.00	8.16	1.25
680.00	1.88	.09	1820.00	5.05	.52	2960.00	8.22	1.27
700.00	1.94	.09	1840.00	5.11	.53	2980.00	8.27	1.28
720.00	2.00	.10	1860.00	5.16	.54	3000.00	8.33	1.30
740.00	2.05	.10	1880.00	5.22	.55	3020.00	8.38	1.31
760.00	2.11	.11	1900.00	5.27	.56	3040.00	8.44	1.33
780.00	2.17	.11	1920.00	5.33	.58	3060.00	8.50	1.34
800.00	2.22	.12	1940.00	5.39	.59	3080.00	8.55	1.36
820.00	2.28	.12	1960.00	5.44	.60	3100.00	8.61	1.38
840.00	2.33	.13	1980.00	5.50	.61	3120.00	8.66	1.39
860.00	2.39	.13	2000.00	5.55	.62	3140.00	8.72	1.41
880.00	2.44	.14	2020.00	5.61	.63	3160.00	8.77	1.43
900.00	2.50	.15	2040.00	5.66	.64	3180.00	8.83	1.44
920.00	2.55	.15	2060.00	5.72	.65	3200.00	8.88	1.46
940.00	2.61	.16	2080.00	5.77	.67	3220.00	8.94	1.48
960.00	2.67	.16	2100.00	5.83	.68	3240.00	8.99	1.49
980.00	2.72	.17	2120.00	5.89	.69	3260.00	9.05	1.51
1000.00	2.78	.18	2140.00	5.94	.70	3280.00	9.11	1.53
1020.00	2.83	.18	2160.00	6.00	.71	3300.00	9.16	1.54
1040.00	2.89	.19	2180.00	6.05	.72	3320.00	9.22	1.56
1060.00	2.94	.20	2200.00	6.11	.74	3340.00	9.27	1.58
1080.00	3.00	.20	2220.00	6.16	.75	3360.00	9.33	1.60
1100.00	3.05	.21	2240.00	6.22	.76	3380.00	9.38	1.61
1120.00	3.11	.22	2260.00	6.27	.77	3400.00	9.44	1.63
1140.00	3.16	.22	2280.00	6.33	.79	3420.00	9.49	1.65

Appendix Table 7-13.—Friction loss in plastic irrigation pipe, nominal diameter 15 in.

[Inside diameter 14.554 in., discharge increment 50.00 gal/min]

Flow (Q) gal/min	Flow (v) ft/s	Friction loss (J) ft/100 ft	Flow (Q) gal/min	Flow (v) ft/s	Friction loss (J) ft/100 ft
50.00	.10	.00	2650.00	5.11	.43
100.00	.19	.00	2700.00	5.21	.44
150.00	.29	.00	2750.00	5.30	.46
200.00	.39	.00	2800.00	5.40	.47
250.00	.49	.01	2850.00	5.49	.49
300.00	.58	.01	2900.00	5.59	.51
350.00	.67	.01	2950.00	5.69	.52
400.00	.77	.01	3000.00	5.78	.54
450.00	.87	.02	3050.00	5.88	.55
500.00	.96	.02	3100.00	5.98	.57
550.00	1.06	.03	3150.00	6.07	.59
600.00	1.16	.03	3200.00	6.17	.61
650.00	1.25	.03	3250.00	6.27	.62
700.00	1.35	.04	3300.00	6.36	.64
750.00	1.45	.04	3350.00	6.46	.66
800.00	1.54	.05	3400.00	6.55	.68
850.00	1.64	.05	3450.00	6.65	.69
900.00	1.74	.06	3500.00	6.75	.71
950.00	1.83	.07	3550.00	6.84	.73
1000.00	1.93	.07	3600.00	6.94	.75
1050.00	2.02	.08	3650.00	7.04	.77
1100.00	2.12	.09	3700.00	7.13	.79
1150.00	2.22	.09	3750.00	7.23	.81
1200.00	2.31	.10	3800.00	7.33	.83
1250.00	2.41	.11	3850.00	7.42	.85
1300.00	2.51	.12	3900.00	7.52	.87
1350.00	2.60	.13	3950.00	7.61	.89
1400.00	2.70	.13	4000.00	7.71	.91
1450.00	2.80	.14	4050.00	7.81	.93
1500.00	2.89	.15	4100.00	7.90	.95
1550.00	2.99	.16	4150.00	8.00	.97
1600.00	3.08	.17	4200.00	8.10	.99
1650.00	3.18	.18	4250.00	8.19	1.02
1700.00	3.28	.19	4300.00	8.29	1.04
1750.00	3.37	.20	4350.00	8.39	1.06
1800.00	3.47	.21	4400.00	8.48	1.08
1850.00	3.57	.22	4450.00	8.58	1.11
1900.00	3.66	.23	4500.00	8.68	1.13
1950.00	3.76	.25	4550.00	8.77	1.15
2000.00	3.86	.26	4600.00	8.87	1.17
2050.00	3.95	.27	4650.00	8.96	1.20
2100.00	4.05	.28	4700.00	9.06	1.22
2150.00	4.14	.29	4750.00	9.16	1.25
2200.00	4.24	.31	4800.00	9.25	1.27
2250.00	4.34	.32	4850.00	9.35	1.29
2300.00	4.43	.33	4900.00	9.45	1.32
2350.00	4.53	.34	4950.00	9.54	1.34
2400.00	4.63	.36	5000.00	9.64	1.37
2450.00	4.72	.37	5050.00	9.74	1.39
2500.00	4.82	.39	5100.00	9.83	1.42
2550.00	4.92	.40	5150.00	9.93	1.44
2600.00	5.01	.41			

Appendix C—Equations

7–1 $$P_w = \frac{eS_eS_w}{S_pS_r} \times 100$$

7–2 $$P_w = \frac{eS_e'(S_e' + S_w)}{2(S_pS_r)} \times 100$$

7–3 $$P_w = \frac{e[A_s + (\tfrac{1}{2}S_e' \times PS)]}{(S_pS_r)} \times 100$$

7–4 $$F_{mn} = (M_{ad})(WHC)(RZD)(P_w)$$

7–5 $$T_d = u_d[P_s + 0.15(1.0 - P_s)]$$

7–6 $$F_n = T_dI_f$$

7–7 $$EU = 100(1.0 - \frac{1.27}{\sqrt{e}}v)\frac{q_n}{q_a}$$

7–8a $$F_g = \frac{F_nT_r}{EU}$$

7–8b $$F_g = \frac{F_n}{EU(1.0 - LR_t)}$$

7–9 $$F_{(gp/d)} = 0.623\frac{S_pS_rF_g}{I_f}$$

7–10 $$F_{(an)} = (U - R_e - W_s)[P_s + 0.15(1.0 - P_s)]$$

7–11 $$E_s = EU$$

7–12 $$E_s = \frac{EU}{T_R(1.0 - LR_t)}$$

7–13 $$F_{sg} = \frac{F_{an}}{E_s(1.0 - LR_t)}$$

7–14 $$V_i = \frac{F_{an}A}{12(1.0 - LR_t)E_s/100}$$

7–15 $$Y = \frac{EC_w - \min EC_e}{\max EC_e - \min EC_e} \times 100$$

7–16 $$LR_t = \frac{L_n}{F_n} = \frac{L_N}{F_{an}} = \frac{EC_w}{EC_{dw}}$$

7–17 $$LR_t = \frac{EC_w}{2(\max EC_e)}$$

7–18 $$v = \frac{S}{\bar{q}} = \frac{\sqrt{q_1^2 + q_2^2 \ldots + q_n^2 - n(\bar{q})^2/\sqrt{n-1}}}{\bar{q}}$$

7–19 $$v_s = \frac{v}{\sqrt{e'}}$$

7–20 $$q = k_dh^x$$

7–21 $$x = \frac{\log(q_1/q_2)}{\log(h_1/h_2)}$$

7–22 $$l_c = \frac{hgd^4\pi}{98.6q\nu}$$

7–23 $$q = 187ac_q\sqrt{2gh}$$

7–24 $$q = 187ac_q\sqrt{2g(h - h^1)}$$

7–25 $$h^1 = \frac{h}{1 + m^2}$$

7–26 $$q = 187ac_q\sqrt{2g}\ h^{0.4}$$

7–27 $$q = 187ac_q\sqrt{2g}\ h^x$$

7–28 $$q = 187ac_q\sqrt{2g}(h/m')^{0.7}$$

7–29 $$q = 187ac_q\sqrt{2gh/m'}$$

7–30 $$T_a = \frac{F_{(gp/d)}}{eq_a}$$

7–31 $$h_a = (\frac{q_a}{k_d})^{1/x}$$

7–32 $$EU = 100\ q_n'/q_a'$$

7–33a $$EU = 100(1.0 - 1.27\frac{v}{\sqrt{e'}})\frac{q_n}{q_a}$$

7–33b $$EU = 100(1.0 - 1.27v_s)\frac{q_n}{q_a}$$

7–34 $$\triangle H_s = 2.5(h_a - h_n)$$

7–35a $$Q_s = 726\frac{A}{N}\frac{eq_a}{S_pS_r}$$

7–35b $$Q_s = 726\frac{A}{N}\frac{q_a}{S_eS_l}$$

7–36 $$Q_s = 726\frac{A}{N}\frac{e}{S_p}q_a$$

7-37 $Q_t = 5{,}430 \frac{V_i}{Q_s}$

7-38 $q_n = q_a \left(\frac{h_n}{h_a}\right)^x$

7-39 $h_n = (H_m - \triangle H_m - \triangle h)$

7-40 $F_n = 1.604 \frac{EU}{100} \frac{eq_a}{S_p S_r}$

7-41 $q_f = \frac{F_r A}{H F_c H_r}$

7-42 $C_t = \frac{F_r A}{F_c}$

7-43 $q_c = \frac{0.006 C Q_s}{csg}$

7-44 $J = \frac{h_f 100}{L} = 1{,}050 \frac{\left(\frac{Q}{C}\right)^{1.85}}{D^{4.87}}$

7-45 $N_R = 3{,}214 \frac{Q}{D}$

7-46 $h_f = f \frac{L}{D} \frac{v^2}{2g}$

7-47a $f = \frac{64}{N_R}$

7-47b $\frac{1}{\sqrt{f}} = 0.80 + 2.0 \log (N_R \sqrt{f})$

7-48 $f = 0.32\, N_R^{-0.25}$

7-49a $J = \frac{h_f 100}{L} = 0.133 \frac{Q^{1.75}}{D^{4.75}}$

7-49b $J = \frac{h_f 100}{L} = 0.100 \frac{Q^{1.83}}{D^{4.83}}$

7-50 $h_e = K_f \frac{V^2}{2g}$

7-51a $l' = l\left(\frac{S_e + f_e}{S_e}\right)$

7-51b $J' = J \left(\frac{S_e + f_e}{S_e}\right)$

7-52 $h_f = J'FL/100$

7-53 $\frac{h_{fx}}{L/100} = J'F\left(\frac{x}{L}\right)^{2.75}$

7-54 $PW(r) = \left[\frac{(1+r)^n - (1+i)^n}{(1+r) - (1+i)}\right] \times \left[\frac{1}{(1+i)^n}\right]$

7-55 $EAE(r) = \left[\frac{(1+r)^n - (1+i)^n}{(1+r) - (1+i)}\right] \times \left[\frac{i}{(1+i)^n - 1}\right]$

7-56 $CRF = \frac{i(1+i)^n}{(1+i)^n - 1}$

7-57 $C_{whp} = \frac{(Q_t)(P_{uc})[EAE(r)]}{(E_p)(BHP/P_u)}$

7-58 $A_f = \frac{0.001 C_{whp}}{(CRF)(P_c)}$

7-59 $Q_s' = A_f Q_s$

7-60 $(H_{fe})_m = \sum_1^m h_f \pm \triangle El$

7-61 $L_s = \frac{\triangle H}{J_s - J_l} \times 100$

7-62 $q_l = \frac{l}{S_e} \frac{q_a}{60} = \frac{n_e q_a}{60}$

7-63a $h_l = h_a + 0.75 h_{fp}[z^{3.75} + (1 - z)^{3.75}] - \frac{\triangle El}{2}(2z - 1)$

7-63b $h_l = h_a + 0.75 h_{fp} (0.5)^{2.75} = h_a + 0.11 h_{fp}$

7-63c $h_l = h_a + \frac{3h_f}{4} + \frac{\triangle El}{2}$

7-64a $h_c = h_a - \left(\frac{h_f}{4} + \frac{\triangle El}{2}\right)$

7-64b $h_c = h_l - (h_f + \triangle El)$

7-65a $(h_f)_b \cong (h_f)_a(\frac{l_b}{l_a})^{2.75}$

7-65b $l_b \cong l_a (\frac{(h_f)_b}{(h_f)_a})^{1/2.75}$

7-66 $\triangle h = \frac{J'F}{10} \frac{L}{100} (\frac{\triangle h}{L/100})'$

7-67 $Y = (S/J')^{1/1.75}$

7-68 $S' = SY - J'F(Y)^{2.75}$

7-69 $\frac{S - S'}{J'F} = (x/L)^{2.75} - (1 - x/L)^{2.75}$

7-70 $\triangle h = \frac{L}{100} [J'F(x/L)^{2.75} + S' - S(x/L)]$

7-71a $\triangle h_c = S'(L/100)$

7-71b $\triangle h_c = S^{1.57}(J')^{-0.57}(1 - F)L/100$

7-72 $\triangle h = \frac{L}{100} (J'F + S' - S)$

7-73 $(\triangle H_m)_a = \triangle H_s - \triangle h'$

7-74 $L_p = [(n_r)_p - 1]S_r$

7-75 $L_m = (n_r - 1/2)S_r$

7-76a $H_m = h_l + \triangle H'_m$

7-76b $H_m = h_a + \triangle h' + \triangle H'_m$

7-77 $Q'_s = A_f q_m$

7-78 $L_d = \frac{q_d - q_{d-1}}{q_m} L_m$

7-79a $k = (L_m/q_m)(0.1 \text{ gpm/ft})$

7-79b $k = (S_l/q_l)(0.1 \text{ gpm/ft})$

7-80 $H_f = k(H_{fg})$

7-81a $\triangle H_m = H_f$

7-81b $\triangle H_m = H_f + S(L_m/100)$

7-81c $\triangle H_m = H_f - [S(0.1 - \frac{0.36}{c}) \frac{L_m}{100}]$

7-82a $Q''_s = \frac{H_f}{(\triangle H_m)_a} Q'_s$

7-82b $Q''_s = \frac{H_f}{(\triangle H_m)_a - S(L_m/100)}$

7-82c $Q''_s = \frac{H_f}{(\triangle H_m)_a + [S(1.0 - \frac{0.36}{c})L_m/100]}$

7-83 $S_f = \frac{(q_l)_c}{(q_l)_a} = \frac{(n_p)_c}{(n_p)_a}$

7-84 $H_f = JFF_s(L_m/100) = JF'(L_m/100)$

7-85 $J = J_x(\frac{q_m}{q_x})^{1.8}$

7-86 $j = \frac{(\triangle H_m)_a}{L_m/100}$

7-87 $j' = \frac{(\triangle H_m)_a}{k}$

7-88 $S' = \frac{SL_m}{100k} = \frac{Sq_m}{10} = \frac{\triangle El}{k}$

7-89 $(H_f)_2 = \frac{L_2}{L_1} \frac{(F_s)_2}{(F_s)_1} (\frac{q_2}{q_1})^{1.8} (H_f)_1$

7-90 $F'_{aw} = \frac{1.604eq'_aT_a}{A_w}$

7-91 $F'_a = \frac{1.604eq'_aT_a}{S_p \times S_r}$

7-92 $F'_{(gp/d)} = \frac{eq'_aT_a}{I_f}$

7-93 $EU'_m = 100\ q'_n/q'_a$

7-94a $ERF = \frac{\text{average MLIP} + (1.5 \text{ minimum MLIP})}{2.5(\text{average MLIP})}$

7-94b $ERF = (\frac{\text{minimum MLIP}}{\text{average MLIP}})^x$

7-95 $EU' = (ERF)(EU'_m)$

7-96 $F_n = (F'_n - R'_e)[\frac{P_s}{100} + 0.15(1.0 - \frac{P_s}{100})]$

7-97a $PE_{lq} = \frac{EU'}{T_r(1.0 - LR_t)}$

7-97b $PE_{lq} = EU'$

7-98 $E_{lq} = \frac{100G}{F'_{(gp/d)}}$